JVC

SERVICE MANUAL

VIDEO CASSETTE RECORDER

BR-S822E/BR-S622E

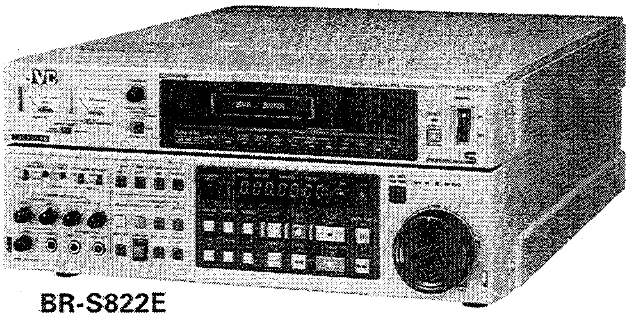
BR-S822E

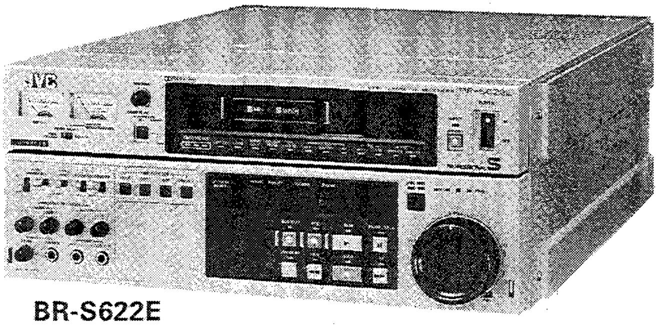
BR-S622E

S-VHS 625 VHS PAL S-VHS C 625 VHS PAL Hi-Fi

SPECIFICATIONS

GENERAL
Format : VHS/S-VHS Europe standard
Power consumption : 90 W
Power requirment : AC 110 – 127 V/220 – 240 V~, 50/60 Hz
Dimensions : 42.9 (W) X 18.8 (H) X 56.5 (D) cm
Weight : 23 kg
Operating temperature : 5°C to 40°C
Storage temperature : –20°C to 60°C
Tape speed : 23.39 mm/sec
Recording & Playback time : Max. 180 min. with JVC SE-180/E-180
Fast forward/Rewind time : Less than 2.5 min. for 180 min. tape

VIDEO
Recording and playback : Rotary two-head helical scanning system
Luminance : FM recording
Colour signal : Phase shift, converted sub-carrier direct recording
Video signal system : PAL-type colour signal/PAL-type Y/C signal
Input
    Line : 1.0 Vp-p, 75 ohms, unbalanced
    Y/C 443 : Y: 1.0 Vp-p, 75 ohms, unbalanced
    C: 0.3 Vp-p, 75 ohms, unbalanced (Burst)
Output
    Line : 1.0 Vp-p, 75 ohms, unbalanced
    Y/C 443 : Y: 1.0 Vp-p, 75 ohms, unbalanced
    C: 0.3 Vp-p, 75 ohms, unbalanced (Burst)
Signal-to-noise ratio : More than 46 dB (S-VHS)
More than 45 dB (VHS)
Horizontal resolution : More than 400 lines (S-VHS)
More than 250 lines (VHS)
Reference video input : 0.3 to 1.0 Vp-p, 75 ohms, unbalanced
(with loop-through, with the SA-T22E)
External sync input : 0.3 to 4.0 Vp-p, 75 ohms, unbalanced
(with one loop-through, without the SA-T22E)

AUDIO
Input
    Line : –6/0/+4 dBs, 10 k-ohms/600 ohms, balanced
    (Hi-Fi/Normal)
    Mic : –67 dBs, 10 k-ohms, unbalanced
Output
    Line : –6/0/+4 dBs, Low impedance, balanced
    (Hi-Fi/Normal)
    Monitor : –6 dBs, Low impedance, unbalanced
    Phones : ∞ to –17 dBs, 8 ohms
Signal-to-noise ratio : More than 43 dB (NR-off, Normal at 3% distortion)
Dynamic range : More than 87 dB (Hi-Fi)
Frequency response : 20 to 20,000 Hz (Hi-Fi)
40 to 12,000 Hz (Normal)
Wow & flutter : Less than 0.005% WRMS (Hi-Fi)
Less than 0.3% RMS (Normal)

TIME CODE
    Input : 0 dB ± 6 dBs, 10 k-ohms, unbalanced
    Output : 0 dB ± 3 dBs, Low impedance, unbalanced

CONNECTORS
Video
    Line input : BNC-type connector
    Line output : BNC-type connectors
    Y/C 443 input/output : 7-pin connectors
    Monitor : BNC-type connector
Audio
    Hi-Fi input/ output : XLR connectors
    Normal input/ output : XLR connectors
    Monitor : RCA connector
Remote control : 9-pin connector

ACCESSORIES
Provided accessories : 7-pin cable

Design and specifications subject to change without notice.

COPYRIGHT © 1992 VICTOR COMPANY OF JAPAN, LTD.

No. 9261
September 1992

COMPARISON TABLE OF DIFFERENT PARTS & FUNCTION BY MODEL

ITEM		BR-S822E	BR-S622E
Editing functions	Insert edit	○ (Yes)	AUD-2 DUB
	Assembly edit	○ (Yes)	× (No)
	Swap control	○ (Yes)	× (No)
Options	TIME BASE CORRECTOR : SA-T22E	△ (Option)	△ (Option)
	DNR : SA-N22W(E)	△ (Option)	△ (Option)
	45PIN I/F : SA-K28E	△ (Option)	△ (Option)
	RS-232C I/F : SA-K27E	△ (Option)	△ (Option)
	RACK MOUNT ADAPTOR : SA-K63EB	△ (Option)	△ (Option)
	U-VCR Y/C OUT : SA-E92E	△ (Option)	△ (Option)
	TIME CODE G/R : SA-R22E	△ (Option)	△ (Option)
Cabinet parts	CASSETTE PANEL	PRD10229G-01	PRD10229H-01
	OPERATION PANEL	PRD10230B	PRD10259C
	RAITING LABEL	PRD30085-05	PRD30085-06
Packing parts	INSTRUCTIONS	PGD30002-283	PGD30002-284
	PACKING CASE	PRD20370-09	PRD20370-10
	Y/C CABLE	PGZ00793-006	× (No)
Board assemblies *1	OPERATION CPU BOARD <42>	PRK10085D1	PRK10085E1
	OPERATION KEY-1 BOARD <43>	PRK10085A2	PRK10085B2
	OPERATION KEY-2 BOARD <44>	PRK10085A3	PRK10085B3
	DIRECTION LED BOARD <47>	PRK10085A5	PRK10085B5

○=STANDARD, △=OPTION, ×=EXCLUDE

Note :
**1 Branch numbers of parts numbers are omitted.*

TABLE OF CONTENTS

Section Title Page

Important Safety Precautions

INSTRUCTIONS

1. GENERAL DESCRIPTION AND DISASSEMBLY

1.1 REMOVAL OF EXTERNAL COVERS 1-1
  1.1.1 Top cover 1-1
  1.1.2 Cassette panel (Upper part of the front panel) 1-1
  1.1.3 Operation panel (Lower part of the front panel) 1-1
  1.1.4 Side covers 1-1
  1.1.5 Bottom cover 1-1
  1.1.6 rear panel 1-1
  1.1.7 Rear bracket 1-1
1.2 REMOVAL OF MAIN BOARDS 1-2
  1.2.1 GROUP C 1-3
  1.2.2 GROUP D 1-4
  1.2.3 GROUP F 1-4
1.3 INTERNAL SWITCHES 1-5
  1.3.1 Function of switch 1-5
1.4 MEMORY SWITCH 1-10
  1.4.1 Initialization of memory switch 1-10
  1.4.2 Indication of ROM and microprocessor versions 1-10
1.5 7-PIN CABLE 1-11
1.6 WHEN IN TROUBLE 1-12
  1.6.1 To take cassette out of set manually 1-12
  1.6.2 Troubleshooting 1-12
  1.6.3 Check of supply voltage 1-14
1.7 PROTOCOL OF 9-PIN REMOTE CONNECTOR 1-15
  1.7.1 SPECIFICATION OF 9-PIN CONNECTOR 1-15
  1.7.2 COMMUNICATION FORMAT 1-15
  1.7.3 COMMAND FORMAT 1-16
  1.7.4 COMMAND TABLE 1-16
1.8 WIDE ASPECT ID 1-30
  1.8.1 Necessity of wide aspect ID 1-30
  1.8.2 Wide aspect ID 1-30
1.9 ADJUSTMENT MODE 1-30

2. MECHANISM ADJUSTMENT

2.1 GENERAL DESCRIPTION 2-1
  2.1.1 Precautions 2-1
  2.1.2 Mechanism operation check 2-1
  2.1.3 Jigs and special tools for mechanism adjustment 2-1
2.2 PERIODIC REPLACEMENT OF MAIN PARTS 2-2
  2.2.1 Location of main parts 2-3
  2.2.2 Cleaning 2-4
  2.2.3 Oilling and greasing 2-4
2.3 REPLACEMENT OF MAIN PARTS 2-5
2.4 ASSEMBLING OF MECHANISM 2-16
2.5 ADJUSTMENT OF REEL SERVO CIRCUIT 2-18
2.6 INTERCHANGE ABILITY ADJUSTMENT 2-23
2.7 ADJUSTMENT OF TAPE TRANSPORT SYSTEM 2-28

3. ELECTRICAL ADJUSTMENT

3.1 PRECAUTIONS 3-1
  3.1.1 Required tools and test instruments 3-1
  3.1.2 Specification of alignment tapes 3-2
  3.1.3 Signals required for video system adjustment 3-3
  3.1.4 Main boards location 3-4
  3.1.5 Explanation of main columns in check and adjustment table 3-5
3.2 D/C SERVO CIRCUIT 3-6
3.3 AUDIO CIRCUIT 3-7
3.5 SUB PANEL CIRCUIT 3-32

Section Title Page

4. DIAGRAMS AND CIRCUIT BOARDS

4.1 KEY TO ABBREVIATIONS 4-2
4.2 REPLACING SUBMINATURE "CHIP" PARTS 4-4
4.3 CIRCUIT BOARD LOCATIONS 4-6
4.4 REC/PB Y BLOCK DIAGRAM 4-7
4.5 REC/PB COLOR-1 BLOCK DIAGRAM 4-8
4.6 REC/PB COLOR-2 BLOCK DIAGRAM 4-9
4.7 R/P ADJUST BLOCK DIAGRAM 4-10
4.8 OUTPUT BLOCK DIAGRAM 4-11
4.9 Y COMB BLOCK DIAGRAM 4-12
4.10 DRUM/CAPSTAN SERVO BLOCK DIAGRAM 4-13
4.11 Hi-Fi AUDIO BLOCK DIAGRAM 4-14
4.12 NORMAL AUDIO BLOCK DIAGRAM 4-15
4.13 AV MICOM/ON SCREEN BLOCK DIAGRAM 4-16
4.14 SYSCON BLOCK DIAGRAM 4-17
4.15 M-CTL & REEL SERVO BLOCK DIAGRAM 4-17
4.16 OVERALL WIRING DIAGRAM 4-18
4.17 MOTHER BOARD-1 SCHEMATIC DIAGRAM 4-20
4.18 MOTHER BOARD-1 CIRCUIT BOARD 4-21
4.19 MOTHER BOARD-2 SCHEMATIC DIAGRAM 4-22
4.20 MOTHER BOARD-2 CIRCUIT BOARD 4-24
4.21 SLOTMOTHER SCHEMATIC DIAGRAM 4-25
4.22 SYSCON MOTHER SCHEMATIC DIAGRAM 4-25
4.23 SYSCON MOTHER & SLOT MOTHER CIRCUIT BOARDS 4-26
4.24 FUSE SCHEMATIC DIAGRAM 4-26
4.25 FUSE CIRCUIT BOARD 4-26
4.26 DECK TERMINAL SCHEMATIC DIAGRAM 4-27
4.27 DECK TERMINAL & CASSETTE HOUSING CIRCUIT BOARDS 4-27
4.28 REC/PB Y SCHEMATIC DIAGRAM 4-28
4.29 REC/PB Y CIRCUIT BOARD 4-30
4.30 REC/PB COLOR CIRCUIT BOARD 4-31
4.31 REC/PB COLOR-1 SCHEMATIC DIAGRAM 4-32
4.32 REC/PB COLOR-2 SCHEMATIC DIAGRAM 4-34
4.33 REC/PB COLOR-2 CIRCUIT BOARD 4-37
4.34 REC/PB ADJUST SCHEMATIC DIAGRAM 4-38
4.35 REC/PB ADJUST CIRCUIT BOARD 4-39
4.36 Y COMB SCHEMATIC DIAGRAM 4-40
4.37 Y COMB CIRCUIT BOARD 4-43
4.38 OUTPUT SCHEMATIC DIAGRAM 4-44
4.39 OUTPUT CIRCUIT BOARD 4-46
4.40 PRE/REC SCHEMATIC DIAGRAM & CIRCUIT BOARD 4-47
4.41 FM AUDIO PRE/REC SCHEMATIC DIAGRAM & CIRCUIT BOARD 4-47
4.42 AUDIO-1 SCHEMATIC DIAGRAM 4-48
4.43 AUDIO-1 CIRCUIT BOARD 4-53
4.44 AUDIO-2 SCHEMATIC DIAGRAM 4-54
4.45 AUDIO-2 CIRCUIT BOARD 4-55
4.46 AUDIO-3 SCHEMATIC DIAGRAM 4-56
4.47 AUDIO-3 CIRCUIT BOARD 4-58
4.48 XLR (AUDIO-4, -5) SCHEMATIC DIAGRAM 4-59
4.49 XLR (AUDIO-4, -5) CIRCUIT BOARD 4-60
4.50 FRONT (AUDIO-6, JACK, VR) SCHEMATIC DIAGRAM 4-61
4.51 FRONT (AUDIO-6, JACK, VR) & A/C HEAD CIRCUIT BOARD 4-62
4.52 DRUM/CAPSTAN SERVO SCHEMATIC DIAGRAM 4-63
4.53 DRUM/CAPSTAN SERVO CIRCUIT BOARD 4-64
4.54 MECHACONTROL/REEL SERVO CIRCUIT BOARD 4-65
4.55 MECHACONTROL/REEL SERVO SCHEMATIC DIAGRAM 4-66
4.56 SYSCON SCHEMATIC DIAGRAM 4-68
4.57 SYSCON CIRCUIT BOARD 4-69
4.58 AV MICOM/ONSCREEN SCHEMATIC DIAGRAM 4-70
4.59 AV MICOM/ONSCREEN & COUNTER DISPLAY CIRCUIT BOARDS 4-71

Section Title Page

4.60 OPERATION SCHEMATIC DIAGRAM 4-72
4.61 OPERATION CIRCUIT BOARD 4-73
4.62 REAR (REAR-1 to -3) SCHEMATIC DIAGRAM 4-74
4.63 REAR (REAR-1 to -3) CIRCUIT BOARD 4-75
4.64 SUBPANEL SCHEMATIC DIAGRAM 4-76
4.65 SUBPANEL CIRCUIT BOARD 4-76
4.66 METER SCHEMATIC DIAGRAM 4-77
4.67 METER CIRCUIT BOARD 4-77
4.68 SWITCHING REGULATOR SCHEMATIC DIAGRAM 4-78
4.69 IC BLOCK DIAGRAM 4-79

5. EXPLODED VIEWS AND PARTS LIST

5.1 EXPLODED VIEWS AND PARTS LIST 5-2
5.1.1 Packing assembly <M1> 5-2
5.1.2 Cabinet assembly <M2> 5-4
5.1.3 Chassis assembly <M3> 5-6
5.1.4 Frame assembly <M4> 5-8
5.1.5 Rear frame assembly <M5> 5-10
5.1.6 Mechanism-1 assembly <M6> 5-12
5.1.7 Mechanism-2 assembly <M7> 5-14
5.1.8 Cassette housing assembly <M8> 5-16
5.1.9 Drum assembly <M9> 5-18
5.1.10 Front panel assembly <MA><MB> 5-18

6. ELECTRICAL PARTS LIST

MOTHER 1 BOARD ASSEMBLY <01> 6-1
MOTHER 2 BOARD ASSEMBLY <02> 6-1
SLOT MOTHER BOARD ASSEMBLY <03> 6-2
SYSCON MOTHER BOARD ASSEMBLY <04> 6-2
FUSE BOARD ASSEMBLY <05> 6-2
R/P Y BOARD ASSEMBLY <10> 6-2
R/P COLOR BOARD ASSEMBLY <11> 6-8
R/P COLOR-2 BOARD ASSEMBLY <12> 6-13
PRE/REC BOARD ASSEMBLY <15> 6-16
R/P ADJUST BOARD ASSEMBLY <16> 6-16
Y COMB ASSEMBLY <17> 6-20
OUTPUT BOARD ASSEMBLY <19> 6-25
FMA PRE/REC BOARD ASSEMBLY <20> 6-29
AUDIO 1 BOARD ASSEMBLY <21> 6-29
AUDIO 2 BOARD ASSEMBLY <22> 6-35
AUDIO 3 BOARD ASSEMBLY <23> 6-37
AUDIO 4 BOARD ASSEMBLY <24> 6-40
AUDIO 5 BOARD ASSEMBLY <25> 6-41
AUDIO 6 BOARD ASSEMBLY <26> 6-42
JACK BOARD ASSEMBLY <27> 6-44
VR BOARD ASSEMBLY <28> 6-44
A/C HEAD BOARD ASSEMBLY <29> 6-44
D/C SERVO BOARD ASSEMBLY <30> 6-44
M.CTL R.SERVO BOARD ASSEMBLY <31> 6-47
SYSCON BOARD ASSEMBLY <40> 6-50
AVM/OS BOARD ASSY <41> 6-52
OPERATION-CPU BOARD ASSEMBLY <42> 6-54
OPERATION-KEY.1 BOARD ASSEMBLY <43> 6-55
OPERATION-KEY 2 ASSEMBLY <44> 6-56
COUNTER DISPLAY BOARD ASSEMBLY <45> 6-56
MAIN LED BOARD ASSEMBLY <46> 6-57
DIRECTION LED BOARD ASSEMBLY <47> 6-57
EJECT SW BOARD ASSEMBLY <48> 6-57
REAR 1 BOARD ASSEMBLY <71> 6-57
REAR 2 BOARD ASSEMBLY <72> 6-58

Section Title Page

REAR 3 BOARD ASSEMBLY <73> 6-58
METER BOARD ASSEMBLY <80> 6-58
METER SW BOARD ASSEMBLY <81> 6-59
TRACKING VR BOARD ASSEMBLY <82> 6-59
SUB PANEL BOARD ASSEMBLY <83> 6-59
TP TERMINAL BOARD ASSEMBLY <84> 6-59
DECK TERMINAL BOARD ASSEMBLY <91> 6-60
CASSETTE HOUSING BOARD ASSEMBLY <93> 6-60

Important Safety Precautions

Prior to shipment from the factory, JVC products are strictly inspected to conform with the recognized product safety and electrical codes of the countries in which they are to be sold. However, in order to maintain such compliance, it is equally important to implement the following precautions when a set is being serviced.

● Precautions during Servicing

1. Locations requiring special caution are denoted by labels and inscriptions on the cabinet, chassis and certain parts of the product. When performing service, be sure to read and comply with these and other cautionary notices appearing in the operation and service manuals.

2. Parts identified by the ⚠ symbol and shaded (▨) parts are critical for safety.
   Replace only with specified part numbers.
   Note: Parts in this category also include those specified to comply with X-ray emission standards for products using cathode ray tubes and those specified for compliance with various regulations regarding spurious radiation emission.

3. Fuse replacement caution notice.
   Caution for continued protection against fire hazard.
   Replace only with same type and rated fuse(s) as specified.

4. Use specified internal wiring. Note especially:
   1) Wires covered with PVC tubing
   2) Double insulated wires
   3) High voltage leads

5. Use specified insulating materials for hazardous live parts. Note especially:
   1) Insulation Tape
   2) PVC tubing
   3) Spacers
   4) Insulation sheets for transistors
   5) Barrier

6. When replacing AC primary side components (transformers, power cords, noise blocking capacitors, etc.) wrap ends of wires securely about the terminals before soldering.

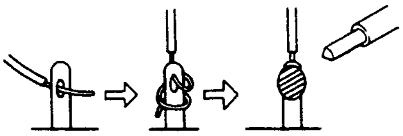

Fig. 1

7. Observe that wires do not contact heat producing parts (heatsinks, oxide metal film resistors, fusible resistors, etc.)

8. Check that replaced wires do not contact sharp edged or pointed parts.

9. When a power cord has been replaced, check that 10—15 kg of force in any direction will not loosen it.

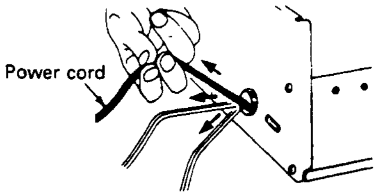

Fig. 2

10. Also check areas surrounding repaired locations.

11. Products using cathode ray tubes (CRTs)
    In regard to such products, the cathode ray tubes themselves, the high voltage circuits, and related circuits are specified for compliance with recognized codes pertaining to X-ray emission. Consequently, when servicing these products, replace the cathode ray tubes and other parts with only the specified parts. Under no circumstances attempt to modify these circuits. Unauthorized modification can increase the high voltage value and cause X-ray emission from the cathode ray tube.

12. Crimp type wire connector
    In such cases as when replacing the power transformer in sets where the connections between the power cord and power transformer primary lead wires are performed using crimp type connectors, if replacing the connectors is unavoidable, in order to prevent safety hazards, perform carefully and precisely according to the following steps.
    1) **Connector part number** : E03830-001
    2) **Required tool** : Connector crimping tool of the proper type which will not damage insulated parts.
    3) **Replacement procedure**
       (1) Remove the old connector by cutting the wires at a point close to the connector.
       Important : Do not reuse a connector (discard it).

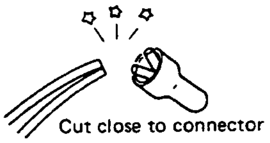

Fig. 3

(2) Strip about 15 mm of the insulation from the ends of the wires. If the wires are stranded, twist the strands to avoid frayed conductors.

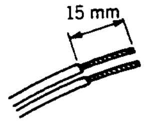

Fig. 4

(3) Align the lengths of the wires to be connected. Insert the wires fully into the connector.

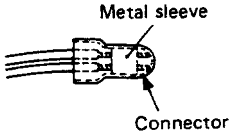

Fig. 5

(4) As shown in Fig. 6, use the crimping tool to crimp the metal sleeve at the center position. Be sure to crimp fully to the complete closure of the tool.

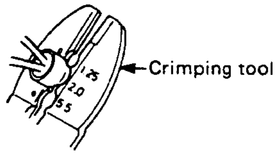

Fig. 6

(5) Check the four points noted in Fig. 7.

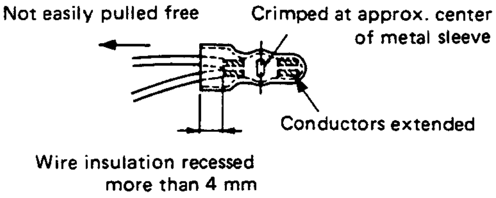
Not easily pulled free
Crimped at approx. center of metal sleeve
Conductors extended
Wire insulation recessed more than 4 mm

Fig. 7

• Safety Check after Servicing

Examine the area surrounding the repaired location for damage or deterioration. Observe that screws, parts and wires have been returned to original positions, Afterwards, perform the following tests and confirm the specified values in order to verify compliance with safety standards.

1. **Insulation resistance test**
   Confirm the specified insulation resistance or greater between power cord plug prongs and externally exposed parts of the set (RF terminals, antenna terminals, video and audio input and output terminals, microphone jacks, earphone jacks, etc.). See table 1 below.

2. **Dielectric strength test**
   Confirm specified dielectric strength or greater between power cord plug prongs and exposed accessible parts of the set (RF terminals, antenna terminals, video and audio input and output terminals, microphone jacks, earphone jacks, etc.). See table 1 below.

3. **Clearance distance**
   When replacing primary circuit components, confirm specified clearance distance (d), (d') between soldered terminals, and between terminals and surrounding metallic parts. See table 1 below.

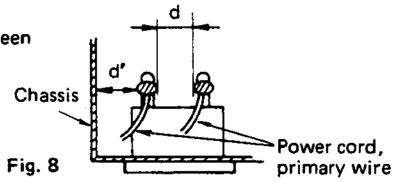

Fig. 8

4. **Leakage current test**
   Confirm specified or lower leakage current between earth ground/power cord plug prongs and externally exposed accessible parts (RF terminals, antenna terminals, video and audio input and output terminals, microphone jacks, earphone jacks, etc.).
   Measuring Method: (Power ON)
   Insert load Z between earth ground/power cord plug prongs and externally exposed accessible parts. Use an AC voltmeter to measure across both terminals of load Z. See figure 9 and following table 2.

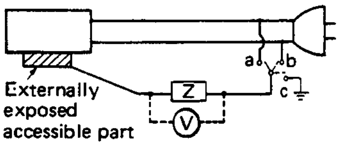

Fig. 9

5. **Grounding (Class I model only)**
   Confirm specified or lower grounding impedance between earth pin in AC inlet and externally exposed accessible parts (Video in, Video out, Audio in, Audio out or Fixing screw etc.).
   Measuring Method:
   Connect milli ohm meter between earth pin in AC inlet and exposed accessible parts. See figure 10 and grounding specifications.

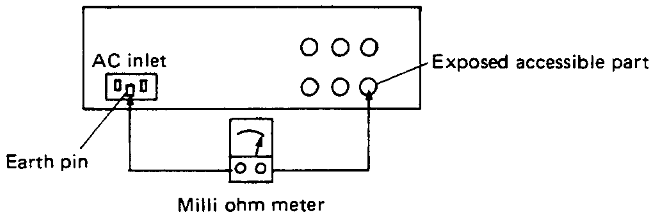

Fig. 10

Grounding Specifications

Region	Grounding Impedance (Z)
USA & Canada	Z ≦ 0.1 ohm
Europe & Australia	Z ≦ 0.5 ohm

AC Line Voltage	Region	Insulation Resistance (R)	Dielectric Strength	Clearance Distance (d), (d')
100 V	Japan	R ≧ 1 MΩ/500 V DC	AC 1 kV 1 minute	d, d' ≧ 3 mm
100 to 240 V			AC 1.5 kV 1 minute	d, d' ≧ 4 mm
110 to 130 V	USA & Canada	–	AC 900 V 1 minute	d, d' ≧ 3.2 mm
110 to 130 V 200 to 240 V	Europe & Australia	R ≧ 10 MΩ /500 V DC	AC 3 kV 1 minute (Class II) AC 1.5 kV 1 minute (Class I)	d ≧ 4 mm d' ≧ 8 mm (Power cord) d' ≧ 6 mm (Primary wire)

Table 1 Specifications for each region

AC Line Voltage	Region	Load Z	Leakage Current (i)	a, b, c
100 V	Japan	1 kΩ	i ≦ 1 mA rms	Exposed accessible parts
110 to 130 V	USA & Canada	0.15 µF 1.5 kΩ	i ≦ 0.5 mA rms	Exposed accessible parts
110 to 130 V 220 to 240 V	Europe & Australia	2 kΩ	i ≦ 0.7 mA peak i ≦ 2 mA dc	Antenna earth terminals
		50 kΩ	i ≦ 0.7 mA peak i ≦ 2 mA dc	Other terminals

Table 2 Leakage current specifications for each region

Note: These tables are unofficial and for reference only. Be sure to confirm the precise values for your particular country and locality.

INSTRUCTIONS

JVC

BR-S822E

VIDEO CASSETTE RECORDER
VIDEOKASSETTENREKORDER
MAGNETOSCOPE A CASSETTE

S-VHS 625 VHS PAL Hi-Fi

PGD30002-283

SAFETY PRECAUTIONS

Warning Notice

FOR YOUR SAFETY (Australia)

1. Insert this plug only into effectively earthed three-pin power outlet.
2. If any doubt exists regarding the earthing, consult a qualified electrician.
3. Extension cord, if used, must be three-core correctly wired.

IMPORTANT (In the United Kingdom)
Mains Supply (AC 240 V∿)
WARNING - THIS APPARATUS
MUST BE EARTHED

The wires in this mains lead are coloured in accordance with the following code;

GREEN-and-YELLOW:	EARTH
BLUE:	NEUTRAL
BROWN:	LINE

As the colours of the wires in the mains lead of this apparatus may not correspond with the coloured markings identifying the terminals in your plug, proceed as follows.
The wire which is coloured GREEN-AND-YELLOW must be connected to the terminal in the plug which is marked with the letter E or by the safety earth symbol ⏚ or coloured GREEN or GREEN-AND-YELLOW. The wire which is coloured BLUE must be connected to the terminal which is marked with the letter N or which is coloured BLACK. The wire which is coloured BROWN must be connected to the terminal which is marked with the letter L or coloured RED.

POWER SYSTEM

Connection to the mains supply
The operating voltage of this set is preset to 220 – 240 V∿ at the factory.
Before connecting to mains, check that the voltage selector on the rear panel is set to the same voltage as your local mains supply.

Adapting to local power line
This set operates on 110 – 127 V/220 – 240 V∿ AC, 50/60 Hz.
If the preset voltage is different from the power line voltage in your area, reset the voltage selector by inserting a screwdriver into the slot of the voltage selector and turning it until the correct voltage is displayed.

This unit is produced to comply with Directives 76/889/EEC, 82/499/EEC, 87/308/EEC, and IEC Publ.65.

WARNING:
TO PREVENT FIRE OR SHOCK HAZARD, DO NOT EXPOSE THIS APPLIANCE TO RAIN OR MOISTURE.

CAUTION
To prevent electric shock, do not open the cabinet. No user serviceable parts inside. Refer servicing to qualified service personnel.

Note:
The rating plate and the safety caution are on the bottom of the unit.

WARNING:
It should be noted that it may be unlawful to re-record pre-recorded tapes, records, or discs without the consent of the owner of copyright in the sound or video recording, broadcast, or cable programme and in any literary, dramatic, musical, or artistic work embodied therein.

CONTENTS

How to Use This Manual 3
Precautions 3
  VCR
  Video Cassettes
Features 4
Controls and Connectors
  Front Panel 5
  Front Sub-Panel 9
  Rear Panel 11
Connections
  Video Equipment 13
  Audio Equipment 14
Reference Sync Signals for Recording and Playback 15
Loading and Unloading Video Cassettes 16
  Loading
  Unloading
On-Screen Displays 17
Playback
  Preparation 18
  Procedure 18
  Shuttle Search 19
  Jog Search 19
  Rewind and Fast-Forward 20
  Preroll Playback 20
Recording
  Preparation 21
  Recording Level Adjustments 21
  Procedure 22
  Record-Pause and Assemble Editing 22
Time Code/User Bits 23
  Time Code
  User Bits
  ID Code
  Time Code Editing
Time Code/User Bits Recording/ Playback
  Preset Recording 24
  Regenerated Recording 25
  Playback 25
Guide to Editing
  Quick Guide to Editing
  Techniques 26
  Editing Connections 27
  Preparing Recording Tapes For Editing 29
Manual Editing
  Preroll Editing 30
  Run Editing 31
Automatic Editing
  Operation Flowchart 32
  Preparation 32
  On-Screen Edit Data Display 33
  Procedure 33
Counter Display 36
Setup Menu
  Operation 37
  Menu Settings 38
  ROM Version/Hour Meter Display ..45
Warning Display 47
Test Points 49
Automatic Equaliser 49
Installation
  Rack Mounting (SA-K63UB) 50
Connector Specifications 51
Specifications 52

HOW TO USE THIS MANUAL

This manual introduces you to the BR-S822E S-VHS Editing Recorder and shows you how to make the most of its many advanced features. Because the manual is written for the person who has some experience in videotape editing and is familiar with the terms and techniques described, explanations and definitions are kept to a minimum.

Also, some functions are available only when the corresponding optional boards are plugged in. Whenever these functions are referred to in the text, it is assumed that the corresponding boards have been installed.

- TBC functions are available only when the optional SA-T22E Time Base Corrector boards are installed.
- Component Y/R-Y/B-Y outputs are available only when the optional SA-T22E Time Base Corrector boards and accompanying component output connector board are installed.
- TC functions are available only when the optional SA-R22E Time Code Reader/Generator board is installed.
- 45-Pin parallel interface is possible only when the optional SA-K28E Interface board is installed.
- RS-232C interface is possible only when the optional SA-K27E Interface board is installed.
- Y/C 686/Y/C 924 Output is available only when the optional SA-E92E Output board is installed.

IMPORTANT

Instructions for all operations are based on the setup menu's initial settings unless otherwise specified. We recommend that you familiarise yourself with the available settings before operating the VCR. For more information, please refer to "Setup Menu", ☞ p.37

PRECAUTIONS

[illegible] VCR [illegible]

- Avoid using the recorder in places subject to the following conditions:
  - extreme heat, cold, or humidity,
  - dust,
  - vibrations, and
  - poor ventilation.
- Be careful of moisture condensation.
  Do not use the recorder immediately after moving it from a cold place to a warm place. The water vapor in warm air will condense on the still-cold video head drum and tape guides and may cause damage to the tape and the recorder.
- Handle the recorder carefully.
  - Do not block the ventilation openings.
  - Do not place anything heavy on the recorder.
  - Do not place anything which might spill on the top cover of the recorder.
  - Use in horizontal (flat) position only.
- During transportation,
  - Avoid violent shocks to the recorder during packing and transportation.
  - Before packing, be sure to remove the cassette from the recorder.

[illegible]

This recorder uses S-VHS, S-VHS-C, VHS, and VHS-C cassettes.

Only cassettes recorded in the standard play (SP) mode can be played on this recorder. LP recording is not possible.

S-VHS: SE-180 for 180 minutes, SE-120 for 120 minutes, SE-60 for 60 minutes, and SE-30 for 30 minutes of recording.
S-VHS-C: SE-C30 for 30 minutes of recording.
VHS: E-180 for 180 minutes, E-120 for 120 minutes, E-90 for 90 minutes, E-60 for 60 minutes, and E-30 for 30 minutes of recording.
VHS-C: EC-30 for 30 minutes of recording.

- To prevent accidental erasure, remove the cassette's safety tab. To record on a cassette whose safety tab has been removed, cover the hole with adhesive tape.
- Before loading a compact cassette, be sure the tape is not slack. If there is any slack, turn the gear on the cassette in the direction of the arrow to take up the slack.
- Avoid exposing the cassettes to direct sunlight. Keep them away from heaters.
- Avoid extreme humidity, violent vibrations or shocks, strong magnetic fields (near a motor, transformer or magnet), and dusty places.
- Place the cassettes in cassette cases and position vertically.

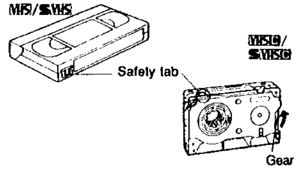

FEATURES

Newly-developed full-size/compact-compatible cassette loading mechanism

Similar in principle to the loading mechanisms employed in M-II, 3/4-inch, and other high-performance professional equipment, the BR-S822E's newly-developed cassette loading mechanism can directly accept both regular and C-sized S-VHS cassettes. The tape transport system has also been improved to provide faster search speeds and more stable transport. C-size S-VHS cassettes are already popular in image acquisition — as exemplified by the success of JVC's GY-X1 S-VHS-C camcorder — and are expected to assume a more important role in distribution, on-air transmission, and other applications. Since direct editing from C-size cassettes is possible with the BR-S822E, higher-quality edits are assured.

Open-ended system architecture with plug-in TC and TBC capability

To better meet the requirements of different edit suites, the BR-S822E has been designed to permit open-ended system expansion. Built-in interfaces are provided for 9-pin RS-422A serial remote, COMPOSITE IN/OUT, and Y/C443 IN/OUT. Further system expansion and customisation is facilitated by a variety of optional "snap-in" boards. These include a time code reader/generator (LTC/VITC), a TBC with field memory and COMPONENT OUT circuit, as well as a 45-pin remote control board, an RS-232C remote control board for connection to a computer, and a Y/C 686/Y/C 924 OUT processor board. Since these circuit boards can be slotted directly into the BR-S822E, it can easily be configured to fit into any existing system without the need for expensive alterations or additional space.

High-quality pictures

S-VHS picture quality* has been improved still further with the addition of advanced circuitry including a digital Y/C separator and digital DOC. Moreover, this high picture quality is maintained through multi-generational dubbing; even after as many as five generations, the results match those available from 3/4-inch equipment. For improved playback picture performance, noise reduction circuitry and switching noise masking are provided.

- * Technology licensed by FAROUDJA Laboratories.
- * Employs chroma-enhancing technology co-developed by JVC and FAROUDJA Laboratories and modified for S-VHS applications.

Fully-equipped for high-performance professional editing

The BR-S822E is equipped with a comprehensive set of studio-level editing functions. Search/jog dials are provided for fast and accurate location of edit points with maximum visual search speed increased to 32x. Edit quality is enhanced by features such as twin rotary erase heads, preroll, colour frame servo, auto H-Phase lock, and capstan bump functions. Convenient editing functions such as swap editing, preview, review, go-to, and edit point entry make high-performance editing possible even when an editing controller is not incorporated in the system.

Menu Display and On-Screen Mode Check

For easy set-up and customisation, the BR-S822E features a menu display which allows simple dial setting and switching of most basic functions while referring to indications on the counter display or on-screen. As a result, many seldom-used external switches have been eliminated. Even functions normally requiring DIP switch resetting can be switched directly via the menu display. On-screen mode check and warning indications are also provided.

Other features

- 4-Field sequence colour frame servo
- Hi-Fi Stereo system with Hyper-tangent system to minimise switching noise for a dynamic range of more than 87 dB
- Two-channel normal audio with switchable Dolby B* noise reduction
- Independent audio level controls for all four channels
- XLR balanced audio connectors
- Two level meters switchable between Hi-Fi and Normal audio; the right meter can also function as a video level/tracking meter
- Video recording level control
- 8-Digit time counter for indication of editing data in either TC or CTL mode
- Built-in black burst signal generator
- Wide-aspect (16:9) ID recording capability
- External sync input for reference video
- Y-Frequency response control
- Tiltable control panel
- Heavy-duty full-loading mechanism with high-speed chassis
- Self-diagnostic warning system
- Front-access test points
- Automatic head cleaning mechanism
- 9999-hour meter switchable from tape counter
- Headphone jack with adjustable level output
- 19-inch EIA rack mounting

* Dolby noise reduction manufactured under license from Dolby Laboratories Licensing Corporation. "DOLBY" and the double-D symbol ꟺ are trademarks of Dolby Laboratories Licensing Corporation.

CONTROLS AND CONNECTORS

FRONT PANEL

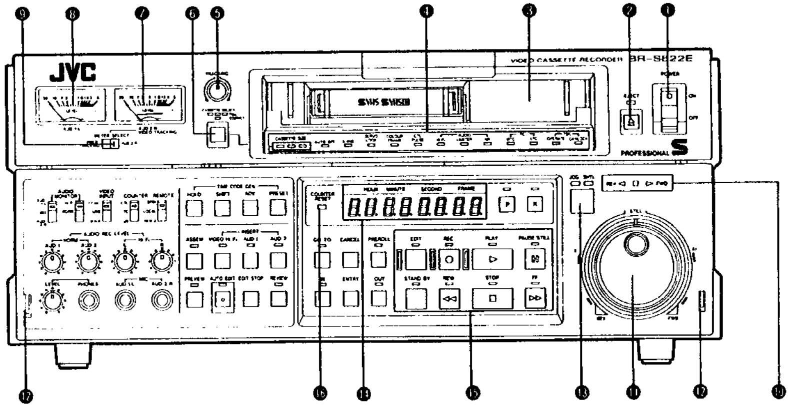

① **POWER switch**
- When power is ON, the time counter and level meters will be illuminated.

② **EJECT button with LED indicator**
- Ejects the cassette (from any mode).
- The indicator lights while the cassette is being ejected.

③ **Cassette loading slot**
- Accepts either a compact or full-size S-VHS/VHS cassette according to the type selected with the CASSETTE SELECT button ⑥.

④ **LED indicators**

CASSETTE SIZE indicators
- Indicate whether the recorder is in the Full or Compact mode. When all three indicators are blinking, the recorder is ready to accept a full-size cassette. When only the centre indicator is blinking, the recorder is ready to accept a compact cassette. Press the CASSETTE SELECT button ⑥ to change modes. When a cassette is inserted, the blinking will stop and the corresponding indicator(s) will remain continuously lit.

AUTO OFF indicator
- Lights when the unit malfunctions. All other controls are disabled.

S-VHS indicator
- Lights when an S-VHS or S-VHS-C cassette is inserted with the unit in the S-VHS mode, or when playing back a blank part of the tape.
- Blinks when S-VHS recording is attempted with a VHS cassette.

TBC indicators
(with optional SA-T22E TBC installed)

OPERATE:	Lights when the TBC is in operation. A *timebase-corrected signal is output.*
GENLOCK:	Lights when the TBC is in operation and locked to the external reference signal.

SERVO indicators

SERVO LOCK:	Lights when the capstan and drum servos are locked to the reference signal.
CTL PULSE:	Lights during playback of a tape with no control pulse recorded.
COLOUR FRAME:	Lights when the capstan and drum servos are locked to PAL 4-field colour frame.

AUDIO indicators

Hi-Fi:	Lights when the Hi-Fi REC circuit is ON (via menu setting) or when playing back Hi-Fi-recorded tapes.
LIMITER:	Lights when the built-in audio limiter circuit is set to ON (via menu setting).
NR:	Lights when the Dolby B* noise reduction circuit is set to ON (via menu setting).

TC (TIME CODE) indicators
(with optional SA-R22E TC [time code] generator/reader installed)

LTC:	Lights green when LTC-recorded tapes are played back with the normal audio-2 track set for LTC use (via menu setting). If LTC is not picked up, the indicator lights orange. This indicator may also light green when normal-audio-recorded tapes are played back.
VITC:	Lights when VITC-recorded tapes are played back or when recording a VITC signal.

⑤ **TRACKING control**
- Adjusts tracking. Turn in either direction until the tracking meter deflects all the way to the right.
- Normally leave in the centre click-stop position.

⑥ **CASSETTE SELECT button**
- Press to select FULL or COMPACT. The corresponding indicator(s) will light.

⑦ **AUD-2/R (VIDEO/TRACKING) level meter**
- Indicates the audio level of the normal audio-2 or Hi-Fi right-channel signal during recording and playback.
- Functions as a video level meter during recording and as a tracking meter during playback when the METER SELECT switch ⑨ is set to VIDEO/TRACKING.

⑧ **AUD-1/L level meter**
- Indicates the audio level of the normal audio-1 or Hi-Fi left-channel signal during recording and playback.

⑨ **METER SELECT switch**
- Switches the AUD-2/R level meter ⑦ between audio level and video level indication.

AUD-2/R:	Meter functions as the audio-2/Hi-Fi right-channel level meter.
VIDEO/TRACKING:	Meter functions as a video level meter in recording, and as a tracking meter in playback.

⑩ **Tape direction indicators**
- Indicate the current tape direction.

▷: Forward
□: Still
◁: Reverse

⑪ **JOG/SHUTTLE dials**
- Dual concentric controls. The outer functions as a Shuttle ring, the inner as a Jog dial. The Jog and Shuttle modes can be entered directly from the Play, Still, FF, REW, or Stop modes.

SHUTTLE ring:	Search speed can be varied continuously from 1/30 to 32 times normal (up to 14 times normal with C-size cassettes) in forward or reverse. Set to the centre click-stop position to engage the Still mode.
JOG dial:	Manual frame-by-frame search in either direction. Tape speed is determined by the speed of dial rotation. Releasing the dial engages the Still mode. Also used in edit point trimming, menu setting and TC/UB presetting.

⑫ **Control panel lock release buttons**
- To tilt the control panel, press these buttons and lift the panel at the same time. The panel can be tilted to 90° and locked at angles of 25°, 50°, and 75°.

⑬ **JOG/SHUTTLE button with JOG/SHTL mode indicators**
- Instantly re-activates the Shuttle mode with search speed determined by the current dial setting.

⑭ **Time counter**
- Shows tape time in hours, minutes, seconds, and frames.
- Displays edit-in and -out points.
- Displays user bits.
- Displays menu settings and warnings.

⑮ **Operation buttons with LED indicators**

PAUSE/STILL button
- Temporarily stops recording when pressed in the Record mode.
- Displays a still picture when pressed in the Play mode.

PLAY button
- Starts playback.
- Re-starts normal playback when pressed in the Still or Search mode.
- Starts recording when pressed together with the REC button.
- Starts editing when pressed together with the EDIT button in the Play mode (Run Editing).
- Re-starts recording when pressed in the Record-Pause mode.

REC button
- Starts recording when pressed together with the PLAY button.
- Outputs EE signals when pressed in the Play mode.
- Displays TC generator data when pressed in the Stop mode with REMOTE select switch ⑰ set to LOCAL. (Released by pressing STOP button.)

EDIT button
- Starts editing when pressed together with the PLAY button in the Play mode.
- Outputs EE signals (selected with the Edit Mode Select buttons) when pressed on its own in the Play mode.
- Displays TC generator data when pressed in the Stop mode. (Released by pressing STOP button.)

STAND BY button
- Switches the recorder between the Standby-On and Standby-Off modes while the VCR is in the Stop mode. Standby-On is automatically engaged when the Stop button is pressed.

Standby-On:	The tape is loaded and the drum is rotating. The indicator is lit.
Standby-Off:	The tape is loaded but tape tension is reduced and the drum does not rotate. The indicator is not lit.

REW button
- Starts rewind when pressed in any mode.

STOP button
- Engages the Stop mode (Standby-On). The tape stops, but remains in the full-loaded position with the drum rotating.
- The STOP and STAND BY indicators will light.

FF button
- Starts fast forward when pressed in any mode.

⑯ **COUNTER RESET button**
- Resets the CTL counter to zero.
- Clears the entered edit point.
- The CTL counter will be reset even if this button is pressed in the TC mode.

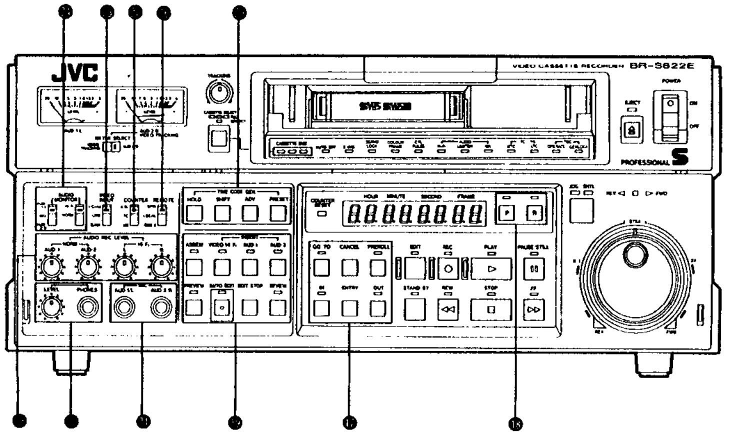

⑰ **Edit control buttons**
PREROLL button with LED indicator
- Prerolls the tape by about 7 seconds.

CANCEL button
- Press together with the IN or OUT button to clear the edit point from memory.

GO TO button
- Press together with the IN or OUT button to access the IN or OUT point.

ENTRY button
- Press together with the IN or OUT button to enter an IN or OUT point.

IN/OUT buttons with LED indicators
- Press together with the ENTRY button to enter the IN or OUT point.
- Press either button on its own to display the IN or OUT point.
- Press simultaneously to display edit duration.
- Turn the JOG dial while holding either button to trim the IN or OUT point.

⑱ **Player/Recorder select buttons**
For swap editing via the 9-pin connector.
- Press P to operate the Player with this recorder's controls.
- Press R to operate this recorder.

⑲ **Edit operation buttons with LED indicators**
Edit mode select buttons
- To select the editing mode.

ASSEM:	All input video and audio signals are recorded.
VIDEO/HI-FI:	Inserts the video signal and the Hi-Fi audio signal together.
AUD-1:	Inserts the normal audio-1 signal.
AUD-2:	Inserts the normal audio-2 signal or the LTC signal.

REVIEW button
- Reviews the executed edit.

EDIT STOP button
- Stops automatic editing.

AUTO EDIT button
- Executes automatic editing.

PREVIEW button
- Previews the programmed edit.

⑳ **Time Code setting buttons**
To preset time code/user bit data (with optional SA-R22E TC generator/reader installed).

HOLD button
This button is only effective when the SA-R22E's PRESET/REGEN switch is set to PRESET.
- Holds the current counter data; the leftmost digit will blink.

SHIFT button
- Shifts the blinking digit to the right. (You can also shift the blinking digit in either direction by holding down the SHIFT button and turning the JOG dial.)

ADV (ADVANCE) button
- Advances the value of the blinking digit. (You can also change the value in either direction by holding down the ADV button and turning the JOG dial.)

PRESET button
- Transfers the data set with the HOLD, SHIFT, and ADV buttons to the time code generator.
- Automatically cancels the Hold mode.

㉑ **MIC jacks (AUD-1/L, AUD-2/R)**
- For microphone connection. Input signal switches from line to microphone.

㉒ **PHONES jack/LEVEL control**
- Connect a set of headphones to monitor sound recording.
- Adjust output level with the LEVEL control.

㉓ **HI-FI L/R and NORM AUD-1/AUD-2 AUDIO REC LEVEL controls**
- To separately adjust recording levels for the Hi-Fi left/right-channel signals and the normal (linear) audio-1/2 signals.
- Optimum level is the point where the corresponding meter's peak deflection is "0".

㉔ **AUDIO MONITOR select switches**
- To select the audio output for the PHONES jack and the AUDIO MONITOR OUT connector.
- The Hi-Fi/NORM switch also switches the audio level meters between Hi-Fi and NORMAL.

Hi-Fi:	To monitor the Hi-Fi audio signals.
NORM:	To monitor the normal audio signals.
AUD-1/L:	To monitor the normal audio-1 or Hi-Fi left-channel signal.
MIX:	To monitor the AUD-1/L and AUD-2/R signals together.
AUD-2/R:	To monitor the normal audio-2 signal or Hi-Fi right-channel signal.

㉕ **VIDEO INPUT select switch**
- To select an input video signal for recording.

Y/C443:	To record the signal input to the Y/C443 connector.
LINE:	To record the signal input to the VIDEO IN LINE connector.
BLACK:	To record the internally-generated black burst signal on a blank tape in preparation for insert editing. If set to this position during menu setting, on-screen information is output from all output connectors, not only the MONITOR OUT connector.

㉖ **REMOTE select switch**
- To select between remote and local control of the recorder.

9-PIN:	For remote control via the rear panel 9-pin connector.
LOCAL:	For direct control with the recorder's function buttons.
REM-2:	For remote control via the optional 45-pin or RS-232C interface.

㉗ **COUNTER select switch**
- To select the time counter display mode with the SA-R22E TC generator/reader installed. If this is not installed, CTL signals are displayed regardless of the switch setting.

CTL:	CTL signals are displayed on the time counter.
TC:	Time code signals are displayed on the time counter.
UB:	User bits are displayed on the time counter.

FRONT SUB-PANEL

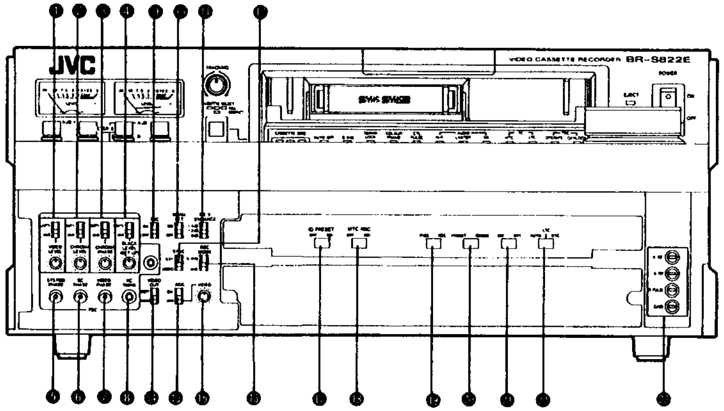

TBC CONTROLS

The controls in this section function when the optional SA-T22E TBC (time base corrector) is installed.

① **VIDEO LEVEL UNITY/VARIABLE select switch/level control**
UNITY: The output signal's video level is the same as the playback signal. Normally set to this position.
VARIABLE: Allows you to adjust the output signal's video level with the VIDEO LEVEL control. Adjustment is possible within ±3 dB.

② **CHROMA LEVEL UNITY/VARIABLE select switch/level control**
UNITY: The output signal's chroma level is the same as the playback signal. Normally set to this position.
VARIABLE: Allows you to adjust the output signal's chroma level with the CHROMA LEVEL control. Adjustment is possible within ±3 dB.

③ **CHROMA PHASE UNITY/VARIABLE select switch/level control**
UNITY: The output signal's chroma phase is the same as the playback signal.
VARIABLE: Allows you to adjust the output signal's chroma phase with the CHROMA PHASE control. Adjustment is possible within ±30°.

④ **BLACK LEVEL VARIABLE/UNITY select switch/level control**
UNITY: The output signal's setup level is the same as the playback signal.
VARIABLE: Allows you to adjust the output signal's setup level with the BLACK LEVEL (SET UP) control. Adjustment is possible within ±107 mV.

⑤ **SYSTEM PHASE control**
- Adjusts the output signal's horizontal phase with respect to that of the reference input signal. Adjustment is possible within a range of ±3 µsec.

⑥ **SC PHASE**
- Adjusts the output signal's subcarrier phase with respect to that of the reference input signal. Up to 15 rotations are possible with continuous variation over a range of ±180°.

⑦ **VIDEO PHASE control**
- Adjusts the output signal's video phase with respect to the playback signal's H sync. Up to 15 rotations are possible with continuous variation over a range of ±1.5 µsec.

⑧ **YC TIMING control**
- Adjusts the output signal's C signal delay time with reference to the Y signal. Adjustable within ±500 nsec.
- Normally set to "8".

⑨ **TBC ON/OFF switch.**
- Set to ON for TBC playback. (During TBC operation, the servo is locked to the reference signal supplied to the EXT REF connector even if the SYNC select switch is set to VIDEO.)
- Pressing any of the edit select buttons defeats TBC operation.
- Set to OFF to bypass TBC.

⑩ **MENU SET ON/OFF switch**
- SET to ON to activate the On-Screen Menu. The counter display will also switch to the Menu Set mode.
- Most basic system setup operations are performed using the Menu.

⑪ **PB Y ENHANCE switch**
- Enhances the luminance signal for a sharper playback picture.
+4 dB: Boosts luminance signal level by 4 dB at 2.5 MHz for maximum picture sharpness.
+2 dB: Boosts luminance signal level by 2 dB at 2.5 MHz for a sharper picture.
0 dB: No effect. The same result is obtained by setting the VIDEO OUT select switch ⑭ to EDIT.

⑫ **SYNC select switch**
EXT: The servo is synchronised with the external reference signal supplied to the EXT REF input.
VIDEO: The servo is synchronised with the input video signal.

⑬ **REC MODE select switch**
S-VHS: To record in the S-VHS mode. (Use S-VHS cassettes only)
VHS: To record in the VHS mode.

⑭ **VIDEO OUT select switch**
EDIT: Set to this position when using this VCR as a feeder or recorder in editing.
NORM: Normally set to this position.

⑮ **VIDEO AGC ON/OFF switch**
- Set to ON to activate the built-in VIDEO AGC circuit.
- Set to OFF to adjust the luminance video recording level manually.

⑯ **VIDEO control**
- Use to adjust video recording level, referring to the VIDEO/TRACKING meter. The centre click-stop is the standard position. The VIDEO AGC switch must be OFF to use this control.

TIME CODE GENERATOR/READER SETTING SWITCHES
(With SA-R22E TC generator/reader installed)

⑰ **ID PRESET ON/OFF switch**
ON: To record the ID code specifically preset for each VCR.
OFF: To use the user bits memory for standard procedures in the Preset mode.

⑱ **VITC REC ON/OFF switch**
ON: To record VITC time codes.
OFF: VITC time codes are not recorded.
NOTE:
This switch has no effect on LTC recording (enabled by setting menu item #206 to "01 – LTC").

⑲ **FREE/REC switch**
- This switch is effective only when the PRESET/REGEN switch is set to PRESET and the INT/EXT switch is set to INT.
FREE: The time code runs in real time, regardless of the video recorder's operating mode.
REC: The time code runs only during recording.

⑳ **PRESET/REGEN switch**
PRESET: To use the internal TC generator in the Preset mode (with the INT/EXT switch set to INT), or to use an external TC generator via the TIME CODE IN connector (with the INT/EXT switch set to EXT).
REGEN: To use the internal TC generator in sync with either the playback time codes (with the INT/EXT switch set to INT), or externally input time codes (with the INT/EXT switch set to EXT).

㉑ **INT/EXT switch**
INT: To use the internal TC generator.
EXT: To use an externally-connected LTC/VITC generator.

㉒ **AUTO/LTC/VITC switch**
- To select the TC reader mode. Select the mode according to the type of reference time code with which the internal TC generator is synchronised in the Regen mode.
AUTO: For tapes with matching VITC and LTC data. Counts time codes in VITC at tape speeds lower than normal, and in LTC at speeds higher than normal. Missing sections are interpolated with CTL counts.
LTC: For LTC-only tapes or when editing with LTC data. Counts time codes in CTL at tape speeds lower than normal and higher than 10 times normal, and in LTC at speeds higher than normal. Missing sections are interpolated with CTL counts.
VITC: For VITC-only tapes or when editing with VITC data. Counts time codes in VITC at tape speeds lower than 10 times normal, and in CTL at speeds higher than 10 times normal. Missing sections are interpolated with CTL counts.

㉓ **Test points**
V-RF test point
- Outputs the video head FM signal during playback.
- Can be used for detection of clogged or worn heads.

A-RF test point
- Outputs the Hi-Fi audio FM signal during playback.
- Can be used for detection of clogged or worn heads.

D-PULSE pin
- Connect to the external trigger terminal of an oscilloscope.

GND
- Connect to the ground terminal of an oscilloscope.

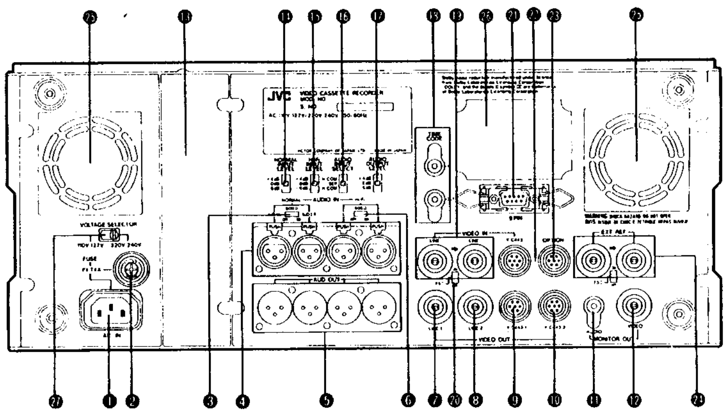

① **AC IN socket**
- Connect to 110 – 120 V or 220 – 240 V AC, 50/60 Hz power outlet.

② **Fuse holder**

③ **NORM AUDIO INPUT impedance select switch**
ON: 600 ohms.
OFF: 10 k-ohms. Normally set to this position.

④ **Audio input connectors**

AUDIO IN NORMAL:	Normal audio input connectors for Audio-1 and Audio-2.
AUDIO IN Hi-Fi:	Hi-Fi audio input connectors for Left and Right.

⑤ **Audio output connectors**

AUDIO OUT NORMAL:	Normal audio output connectors for Audio-1 and Audio-2.
AUDIO OUT Hi-Fi:	Hi-Fi audio output connectors for Left and Right.

⑥ **HI-FI AUDIO INPUT impedance select switch**
ON: 600 ohms.
OFF: 10 k-ohms. Normally set to this position.

⑦, ⑧ **VIDEO OUT LINE (1, 2) connectors**
- The composite video signal is output from these connectors.

⑨, ⑩ **VIDEO OUT Y/C443 (1, 2) connectors**
- The Y/C443 signal is output from these connectors.

⑪ **AUDIO MONITOR OUT connector**
- The audio signal selected with the AUDIO MONITOR select switches is available at this connector.

⑫ **VIDEO MONITOR OUT connector**
- The composite video output signal is available at this connector. On-screen information is also supplied.

⑬ **Expansion slot**
- For installation of optional interface (SA-K28E or SA-K27E).

⑭ **NORMAL INPUT LEVEL select switch**
- To select -6 dB, 0 dB, or +4 dB according to the level of the normal audio input signal. Both channels are switched simultaneously.

⑮ **HI-FI INPUT LEVEL select switch**
- To select -6 dB, 0 dB, or +4 dB according to the level of the Hi-Fi audio input signal. Both channels are switched simultaneously.

⑯ **AUDIO INPUT SELECT switch**

H COM:	"Hi-Fi Combined" recording. Set to this position to record audio signals input to the AUDIO IN Hi-Fi connectors on both the Hi-Fi and Normal audio tracks.
SEP:	"Separate" recording. Set to this position to record audio signals input to the AUDIO IN Hi-Fi and NORMAL connectors separately on the Hi-Fi and Normal audio tracks.
N COM:	"Normal Combined" recording. Set to this position to record audio signals input to the AUDIO IN NORMAL connectors on both the Hi-Fi and Normal audio tracks.

⑰ **AUDIO OUTPUT LEVEL select switch**
- To select -6 dB, 0 dB, or +4 dB according to the input level of connected audio equipment. All four audio channels are switched simultaneously.

⑱ **TIME CODE IN/OUT connectors**
Set menu item #206 to "01 – LTC" to record LTC time codes on the normal audio-2 track.
- Connect a time code generator to the IN connector for external time code recording.
- Connect a time code reader to the OUT connector for external time code reading.

⑲ **VIDEO IN LINE connectors**
- The composite video signal is input to the left connector.
- To output the loop-through signal to another unit, set the 75-ohm terminating switch to OFF.

⑳ **75-Ohm terminating switch**
ON: The loop-through signal is terminated at the BR-S822E.
OFF: The loop-through signal is output to another unit.

㉑ **9-PIN connector**
- Connect to an RS-422 9-pin serial remote control unit or to the RS-422 9-pin connector of a feeder for swap editing.

㉒ **VIDEO IN Y/C443 connector**
- The Y/C443 signal is input to this connector.

㉓ **OPTION connector**
- Delivers the Y/C 686/Y/C 924 signal (with optional SA-E92E Output board installed) to the DUB IN connector of 3/4" U-VCR machines.

㉔ **EXT REF connectors with 75-ohm terminating switch**
- Supply the reference signal (either black burst signal or composite video) to the left connector and set the 75-ohm terminating switch to ON.
- To output a loop-through signal to another unit, set the 75-ohm terminating switch to OFF.

NOTE:
- When using the SA-T22E, do not use a black-and-white signal or sync signal without burst as the reference signal, otherwise the intended synchronisation will not be obtained.

㉕ **Fans**

㉖ **Expansion slot**
For installation of COMPONENT OUT connector board when optional SA-T22E TBC is installed.
- Y/R-Y/B-Y output connectors: MII or Betacam component signal is output.
- TBC remote terminal: Connect a 15-pin remote controller for TBC operation.

㉗ **VOLTAGE SELECTOR**
- Select voltage according to your local power supply.
  (Be sure the POWER is off when setting the voltage.)

CONNECTIONS

VIDEO EQUIPMENT

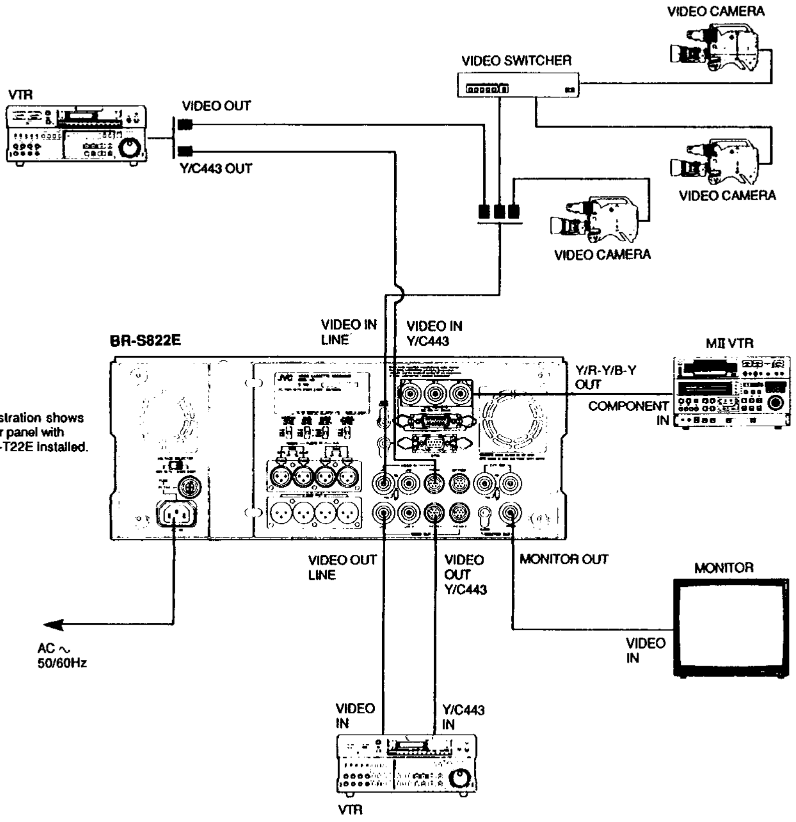
VIDEO CAMERA
VIDEO SWITCHER
VTR
VIDEO OUT
Y/C443 OUT
VIDEO CAMERA
VIDEO CAMERA
BR-S822E
VIDEO IN
LINE
VIDEO IN
Y/C443
MII VTR
Y/R-Y/B-Y
OUT
COMPONENT
IN
VIDEO OUT
LINE
VIDEO
OUT
Y/C443
MONITOR OUT
MONITOR
VIDEO
IN
AC ~
50/60Hz
VIDEO
IN
Y/C443
IN
VTR

- Illustration shows rear panel with SA-T22E installed.

NOTES:
- To output the loop-through signal, set the 75-ohm terminating switch to OFF, otherwise set it to ON. (Be sure to terminate the signal at the last of the connected units.)
- On-screen information is output from the VIDEO MONITOR OUT connector only.
- Y/R-Y/B-Y component signals can be output when the optional TBC board SA-T22E is installed. M-II and Betacam component signals are selectable via menu item #104. (☞ p.39)

AUDIO EQUIPMENT

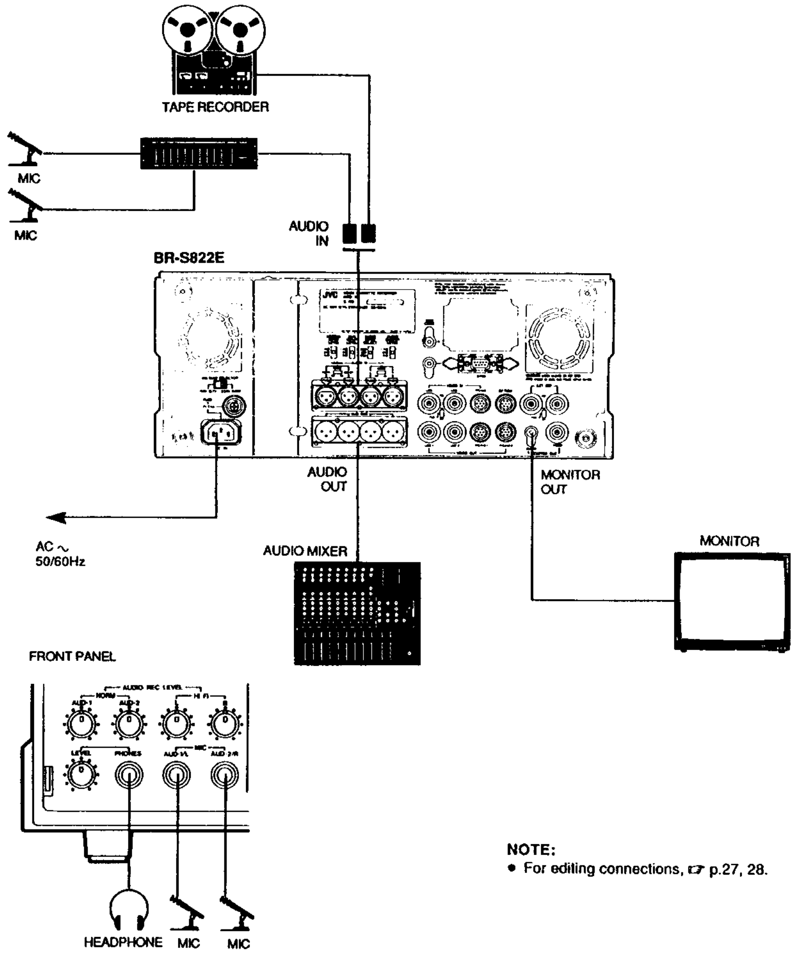
TAPE RECORDER
MIC
MIC
AUDIO
IN
BR-S822E
AUDIO
OUT
MONITOR
OUT
AC ~
50/60Hz
AUDIO MIXER
MONITOR
FRONT PANEL
HEADPHONE
MIC
MIC

NOTE:
- For editing connections, ☞ p.27, 28.

NOTES:
- The MIC jack has priority over the rear panel AUDIO IN connectors. When a microphone is connected, the input signal is automatically shifted from AUDIO IN to MIC.

REFERENCE SYNC SIGNALS FOR RECORDING AND PLAYBACK

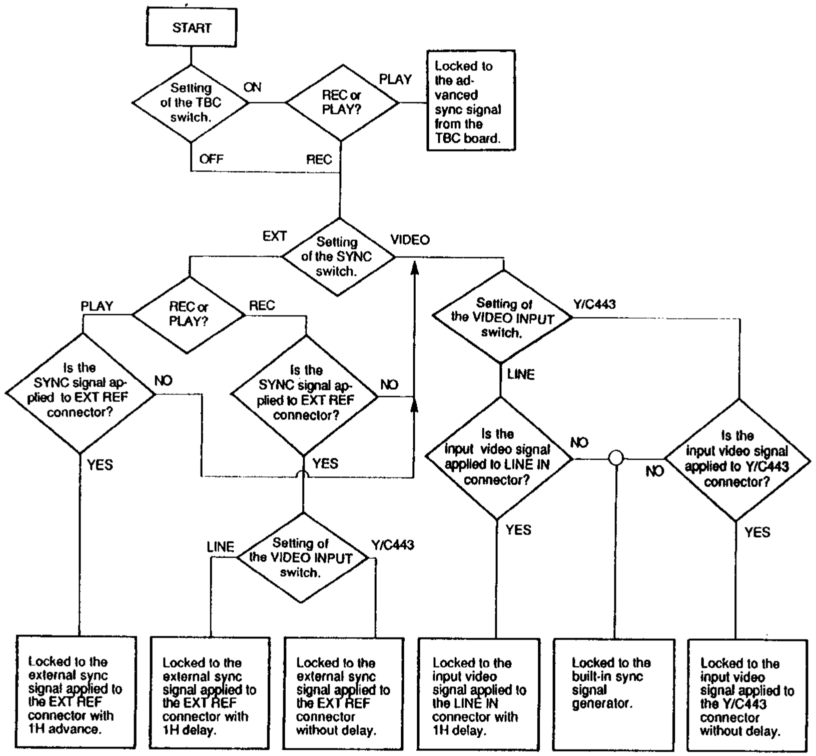
START
Setting of the TBC switch.
ON
OFF
REC or PLAY?
PLAY
REC
Locked to the advanced sync signal from the TBC board.
Setting of the SYNC switch.
EXT
VIDEO
REC or PLAY?
PLAY
REC
Is the SYNC signal applied to EXT REF connector?
NO
YES
Is the SYNC signal applied to EXT REF connector?
NO
YES
Setting of the VIDEO INPUT switch.
LINE
Y/C443
Setting of the VIDEO INPUT switch.
Y/C443
LINE
Is the input video signal applied to LINE IN connector?
NO
YES
Is the input video signal applied to Y/C443 connector?
NO
YES
Locked to the external sync signal applied to the EXT REF connector with 1H advance.
Locked to the external sync signal applied to the EXT REF connector with 1H delay.
Locked to the external sync signal applied to the EXT REF connector without delay.
Locked to the input video signal applied to the LINE IN connector with 1H delay.
Locked to the built-in sync signal generator.
Locked to the input video signal applied to the Y/C443 connector without delay.

LOADING AND UNLOADING VIDEO CASSETTES

LOADING

1. Switch on the power.
2. Check the AUTO OFF indicator.
   - If this indicator lights, some abnormal condition such as condensation has occurred. All functions except Eject are disabled.
3. Check the CASSETTE SIZE indicators.
   - If you're loading a full-size cassette, be sure that all three indicators are blinking.
   - If you're loading a compact cassette, be sure that only the centre indicator is blinking.
   - Press the CASSETTE SELECT button to change modes.
4. Insert a cassette with its label side facing you.
   - The cassette is automatically retracted and loaded.
   - The VCR enters the Stop/Standby-On mode. The STOP and STAND BY indicators will light. In this mode, the tape is fully loaded and the head drum is rotating. The CASSETTE SIZE indicator(s) will stop blinking but remain illuminated.
   - Output signal changes from EE to playback.

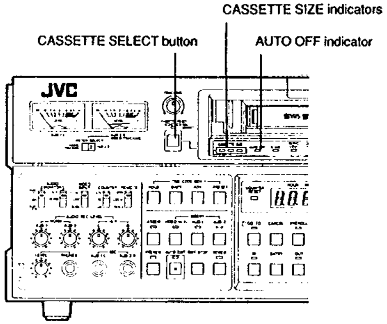
CASSETTE SIZE indicators
CASSETTE SELECT button
AUTO OFF indicator
JVC

NOTES:
- Be sure that the CASSETTE SIZE indicator(s) is blinking when inserting a cassette.

5. To cancel the Standby-On mode, press the STAND BY button.
   - The head drum will stop rotating, but the tape remains in the full-loaded position. The STAND BY indicator will go out.
   - As soon as you engage another mode (Play, Rewind, Fast Forward, Record, etc.), the STAND BY indicator will come on again.

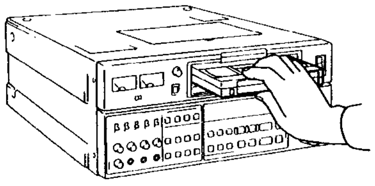

UNLOADING

1. Press EJECT.
   - The cassette is ejected automatically.
   - You can press the EJECT button in any mode.
   - Output signal changes from playback to EE.
2. Remove the cassette.

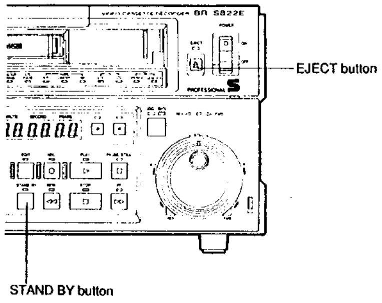
EJECT button
STAND BY button

WARNING
- Do not insert fingers or foreign objects into the cassette loading slot as this may result in personal injury or damage to the mechanism.
- Do not try to remove the cassette once automatic loading has started.

ON-SCREEN DISPLAYS

You can choose the display mode via menu setting. The time counter, operation mode, and Jog/Shuttle tape speed displays are available with the initial setting. You can reset the menu parameters to obtain any of the following displays:

- Time Counter
- Time Counter + Operation mode + Jog/Shuttle tape speed
- Editing data

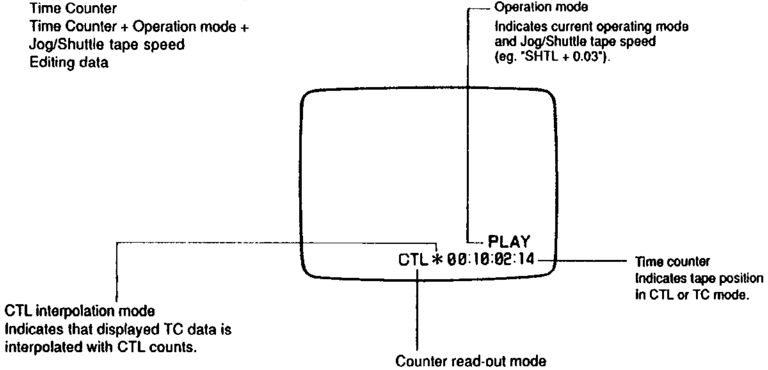
Operation mode
Indicates current operating mode and Jog/Shuttle tape speed (eg. "SHTL + 0.03").
PLAY
CTL ✱ 00:10:02:14
Time counter
Indicates tape position in CTL or TC mode.
CTL interpolation mode
Indicates that displayed TC data is interpolated with CTL counts.

Counter read-out mode

CTL	: CTL reader data
VTCR	: VITC reader data
LTCR	: LTC reader data
TCG	: Time code generator data
ETCG	: External TC data
VUBR	: VITC user bits reader data
LUBR	: LTC user bits reader data
ID	: ID data
UBG	: User bits generator data

NOTE:
- For edit data display, ☞ p. 33.

PLAYBACK

PREPARATION

1. Set the SYNC select switch as required. (☞ p.10)
2. Set the AUDIO MONITOR select switches as required. (☞ p.8)
3. Set the COUNTER select switch as required. (☞ p.8)
4. Set the VIDEO OUT select switch as required.
   NOR: for normal playback.
   EDIT: when using the VCR as an edit feeder.
5. Set the REMOTE select switch as required. (☞ p.8)
6. Set the TBC switch to ON if you are using the SA-T22E or an external TBC.

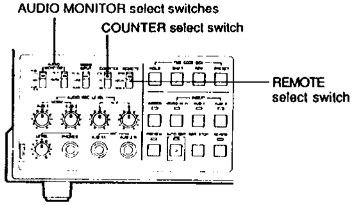
AUDIO MONITOR select switches
COUNTER select switch
REMOTE select switch

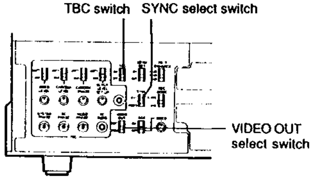
TBC switch
SYNC select switch
VIDEO OUT select switch

PROCEDURE

1. Press the PLAY button.
   - Normal playback starts.
2. Check the tracking level.
   - Set the METER SELECT switch to VIDEO/TRACKING.
   - Adjust the TRACKING control until the tracking meter (AUD-2/R) deflects fully to the right.
   - Check the monitor screen to be sure that the picture is not blurred or marred by noise bars.
3. Set the PB Y ENHANCE switch as required.
   - If the VIDEO OUT select switch is set to EDIT, this switch has no effect.
4. Press the STOP button to stop playback.

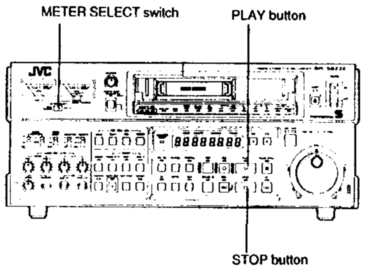
METER SELECT switch
PLAY button
JVC
STOP button

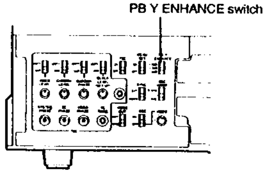
PB Y ENHANCE switch

NOTES:
- LP recordings cannot be played back.
- To monitor the input signal during playback, press the REC button while in the Play mode.
- Do not press the REC and PLAY buttons simultaneously, otherwise the VCR will enter the Record mode.
- The VCR is preset to enter the Stop mode at tape end. If you want the VCR to automatically rewind when the end of the tape is reached, set menu item #312 to "01 – REW". (☞ p.40)

SHUTTLE SEARCH

The Shuttle Search mode is automatically activated when you turn the outer Shuttle ring in the Play, Still, FF, REW, or Stop mode. Turn the ring to adjust tape speed and direction as required.

- The STILL position (centre click-stop) provides a still picture.
- Turn the dial clockwise to search in the forward direction; counterclockwise to search in the reverse direction.
- The X1 click-stop provides normal speed search in the forward direction. X–1 provides normal speed search in the reverse direction.
- Another click-stop is located between X1 and the maximum position. This provides search at 4 times normal speed.
- When the dial is turned fully clockwise or counterclockwise, maximum search speed (about 32 times normal with full-size cassettes and 10 times normal with C-size cassettes) is provided.
- To change modes, press the button corresponding to the desired mode (PLAY, STOP , REW, FF)
- For immediate reactivation of the Shuttle mode at the search speed corresponding to the current dial setting, press the JOG/SHUTTLE button.

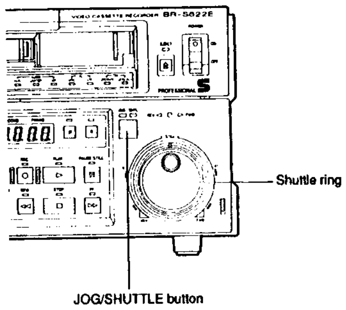

JOG SEARCH

Turn the inner Jog dial to adjust tape speed and direction as required.

- The VCR enters the Jog mode and the JOG indicator lights.
- Tape speed varies in relation to how quickly you turn the dial.
- When the dial is released, the VCR enters the Still mode.

NOTES:

- Leaving the VCR in the Still mode for too long may damage the tape. To prevent this, the tape is automatically shifted to another video track when the Still mode continues for more than 5 minutes. (selectable with menu item #307, ☞ p.40.)

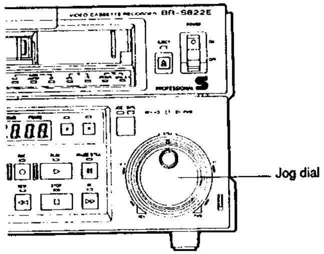

REWIND AND FAST-FORWARD

1. To rewind the tape at high speed, press REW in any mode.
2. To advance the tape at high speed, press FF in any mode.
3. Press STOP to stop rewind or fast-forward.

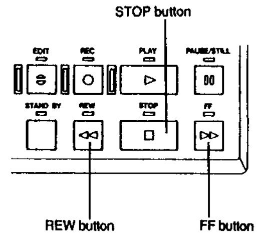

PREROLL PLAYBACK

This function allows you to cue programmes for feeding or insertion and ensures that the tape is stabilised when the picture is transmitted.

1. Locate the point where you wish playback to begin.
2. Press PREROLL.

- The tape will rewind about 7 seconds of programme time and enter the Stop mode. (Preroll time is selectable via menu item #320, ☞ p.41)

3. Press PLAY exactly 7 seconds before the scheduled insertion time.

- Playback starts. When transmission starts, the picture will be fully stabilised.

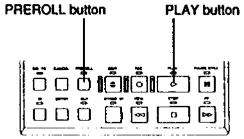

RECORDING

PREPARATION

1. Set the REC MODE select switch.
   VHS: To record in the VHS SP mode.
   S-VHS: To record in the S-VHS SP mode. (Use S-VHS cassette only)
2. Set the SYNC select switch as required. (☞ p.10)
3. Set the COUNTER select switch as required. (☞ p.8)
4. Set the VIDEO INPUT select switch as required. (☞ p.8)
5. Set the REMOTE select switch as required. (☞ p.8)
6. Set the AUDIO MONITOR select switches as required. (☞ p.8)
7. Set the VIDEO OUT select switch as required.
   NOR: For normal recording.
   EDIT: For recording with the aparture control circuit OFF.
8. Set menu item #000 to "01 — 4 FIELD". (☞ p.38)

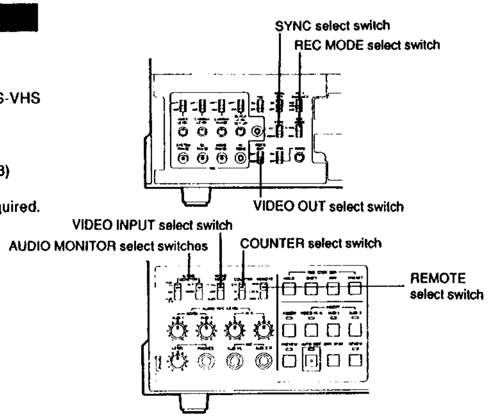
SYNC select switch
REC MODE select switch
VIDEO OUT select switch
VIDEO INPUT select switch
AUDIO MONITOR select switches
COUNTER select switch
REMOTE select switch

RECORDING LEVEL ADJUSTMENTS

Video Level Adjustment

- For automatic level control, set the VIDEO AGC switch to ON.
- For manual level control, set the VIDEO AGC switch to OFF. Set the METER SELECT switch to VIDEO/TRACKING and turn the VIDEO control until the VIDEO/TRACKING meter deflects to "0" with EBU-standard colour bar input.

Audio Level Adjustment

- Set the rear panel AUDIO INPUT SELECT switch as required.
- Set the rear panel AUDIO INPUT LEVEL select switches to match the input signal level.
- Set the METER SELECT switch to AUD-2/R.
- For Hi-Fi audio recording level adjustment, set the AUDIO MONITOR switch to Hi-Fi and adjust the Hi-Fi AUDIO REC LEVEL L/R controls until the meters deflect to "0" at peak signal level.
- For normal audio recording level adjustment, set the AUDIO MONITOR switch to NORM and adjust the NORM AUDIO REC LEVEL AUD-1/AUD-2 controls until the meters deflect to "0" at peak signal level.

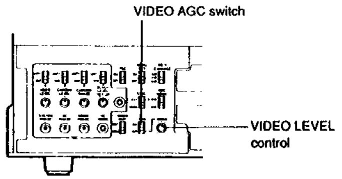
VIDEO AGC switch
VIDEO LEVEL control

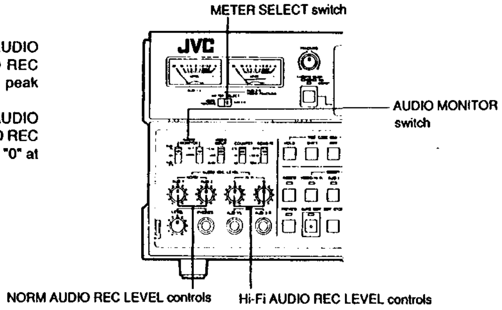
METER SELECT switch
JVC
AUDIO MONITOR switch
NORM AUDIO REC LEVEL controls
Hi-Fi AUDIO REC LEVEL controls

PROCEDURE

1. Press the REC and PLAY buttons simultaneously to start recording.
   - Both the REC and PLAY LEDs will light.
   - To temporarily stop recording, press PAUSE/STILL.
   - To resume recording, press PLAY.
2. Press the STOP button to stop recording.

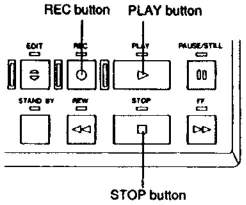
REC button
PLAY button
STOP button

RECORD-PAUSE & ASSEMBLE EDITING

The BR-S822E is equipped with an AEF function which automatically backspaces the tape about 3 seconds whenever the Record-Pause mode is engaged. In combination with the rotary erase head, this assures clean, smooth editing transitions.

1. Press the PAUSE/STILL button during recording. Recording will stop but the REC indicator will remain lit.
   - The tape automatically rewinds about 3 seconds of programme time and stops in the Record-Pause mode. Both the REC and PAUSE/STILL LEDs will light.
2. Press the PLAY button to restart recording.
   - The recorder will play back the tape for 3 seconds, then switch automatically to the Record mode at the point where the PAUSE/STILL button was originally pressed.
   - During the 3-second playback prior to re-engagement of the Record mode, the picture seen on the screen is not the playback picture, but the input signal.

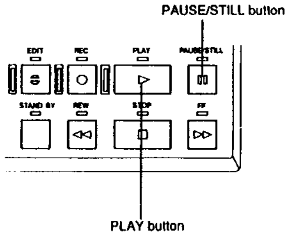
PAUSE/STILL button
PLAY button

TIME CODE/USER BITS

TIME CODE

This system simplifies location and specification of video frames by marking each frame with an 8-digit code number or "address". Essential for accurate editing, these "addresses" represent absolute tape positions and are displayed in hours, minutes, seconds, and frames, allowing you to specify exactly where edits are to start and stop by entering the IN and OUT time code values.
There are two different time code systems: LTC and VITC.

LTC (Longitudinal Time Code)
Time code addresses are recorded on a dedicated linear track by a fixed head. With the BR-S822E, the audio-2 track can be switched to LTC recording.

VITC (Vertical Interval Time Code)
The VITC is recorded during the video signal's vertical blanking period by a rotary head. Besides leaving the audio-2 channel free for editing, this permits accurate readout during still and search at speeds less than normal.

The time code used for the BR-S822E and the SA-R22E time code reader/generator conforms to the EBU standard.

USER BIT

"User bits" is a portion of the time code signal allocated to the user. It can be used to record the operator number or reel numbers.

ID CODE

User bits can also be used to identify the operating VCR. You can preset the VCR's ID code and record it on tape by setting the ID preset ON/OFF switch (on the TC board) to ON. Once the ID code has been preset, it need not be re-set unless you want to change it.

TIME CODE EDITING

Accurate editing in reference to time code data is possible with editing suites controlled via 9-pin serial interface.

- Install the SA-R22E TC board in the BR-S822E.
- Use another VCR with TC reading capability as the player, eg. the BR-S822E or BR-S622E with SA-R22E TC board installed.
- For swap editing, connect the recorder and player via 9PIN connectors. Set the COUNTER switch to TC.
- For externally controlled editing, use a 9-pin serial editing controller. Switching between TC and CTL modes can be done with the controller.
- Time code editing is also possible with RS-232C interface using the optional SA-K27E.

NOTES:
When editing with VITC using SA-T22E's TBC, set menu item #601 V BLANK MASK to "00 — OFF". (☞ p.44)

TIME CODE/USER BITS RECORDING/PLAYBACK

PRESET RECORDING

This technique lets you record time code data starting from a newly specified value.

1. Put the VCR in the Stop mode.
2. Set the INT/EXT switch to INT.
3. Set the PRESET/REGEN switch to PRESET.
4. Set the FREE/REC switch to the desired position.
   FREE: Time code runs in real time, regardless of VCR's operating mode.
   REC: Time code runs only during VCR recording.
5. Set the VITC REC switch to the desired position.
   ON: Records VITC on the tape.
   OFF: VITC is not recorded.
   - Do not record the VITC signal on lines 7, 8, or 11. Line 11 is used for AUTO EQ. (S-VHS only)
   - To record LTC, set menu item #206 to "01 — LTC" (☞ p. 39).
6. Set initial time code/user bit values.

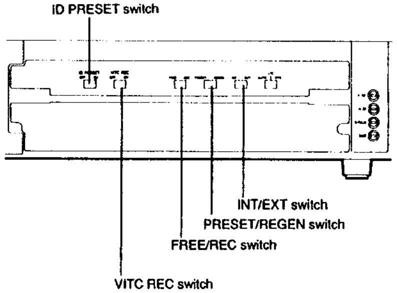

NOTES:

- The time code/user bits signal input to the rear panel TIME CODE IN connector can be recorded in its original form by setting the PRESET/REGEN switch to PRESET and the INT/EXT switch to EXT.
- Time code colour frame data may not always match VCR colour frame data.

Setting Initial Time Code/User Bit Values

- Engage the EE mode by pressing the REC button in the Stop mode. TC generator data is displayed on the counter.

1. Set the COUNTER select switch to TC or UB.
   TC: To set the time code.
   UB: To set the user bits. (When using user bits for ID, also set the ID PRESET switch to ON.)
2. Press the HOLD button.
   - The current counter data is held; the leftmost digit will blink in the Preset mode.
3. Press the ADV (ADVANCE) button.
   - This advances the value of the blinking digit. Set to the desired value. (You can also change the value in either direction by holding down the ADV button and turning the JOG dial.)
4. Press SHIFT.
   - The blinking digit shifts to the right. (You can also shift the blinking digit in either direction by holding down the SHIFT button and turning the JOG dial.)
5. Repeat steps 3 & 4 until all data is set.
6. Press the PRESET button.
   - The preset data will be transferred to the time code generator.
   - In the Free Run mode, time code starts running.
7. Press the STOP button to finish setting.
8. Proceed with recording or editing. (☞ p.21, 26)

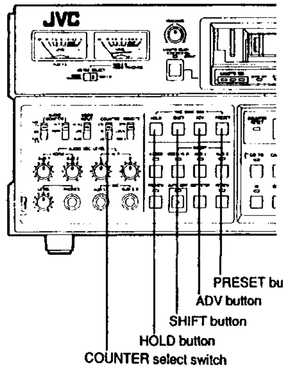

NOTES:

- If the COUNTER RESET button is pressed during TC data setting, the counter is reset to "00:00:00:00".
- In user bits setting, all 8 digits can be changed from "0" to "F".
- TC data is cleared when the VCR's power is turned off.

REGENRATED RECORDING

Internal Regenerate Mode
This technique lets you record time code data on a new edit in sync with the playback time code data on the preceding edit. In automatic editing, jam-sync is also available.

1. Set the INT/EXT switch to INT.
2. Set the PRESET/REGEN switch to REGEN.

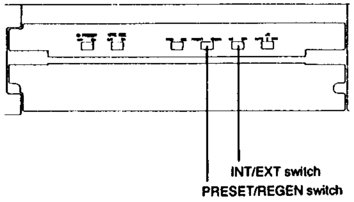

NOTES:
- When editing, use the Regenerate mode.
- If there is discontinuity in time code during preroll, go-to, or edit, the intended result may not be obtained.

External Regenerate Mode
This technique lets you record time code data regenerated in sync with externally input time codes.

1. Connect an external LTC time code generator or the TIME CODE OUT connector of another VCR to the TIME CODE IN connector.
2. Set the COUNTER switch to TC.
3. Set the INT/EXT switch to EXT.
4. Set the PRESET/REGEN switch to REGEN.
5. Set the VITC REC switch as required.
6. Press the REC button in the Stop mode.

- The REC indicator lights and the counter shows time code running in sync with the external TC generator.

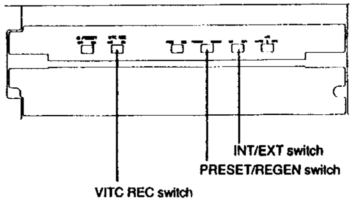

NOTES:
- When using an external VITC time code generator, menu item #409 must be re-set to "01 — VITC" (☞ p.43) and the VIDEO IN connector must be used instead of the TIME CODE IN connector.
- The EE picture does not include the VITC signal.

PLAYBACK

- When tapes with time code are played back, the rear panel TIME CODE OUT connector outputs the playback time code signal in its original form. The counter shows time code being read by the internal TC reader (with COUNTER switch set to TC).
- If you need regenerated time code from the TIME CODE OUT connector, re-set menu item #405 to "01 – TCG" (☞ p.43), and set the front panel INT/EXT switch to INT and the PRESET/REGEN switch to REGEN. To dub time code, or to supply the playback time code signal to another VCR, use this mode for more assured time code recording.

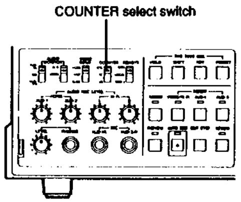

NOTES:
- All time code data is cleared when power is switched off.
- For more options, refer to TIME CODE menu settings. (☞ p.43)

GUIDE TO EDITING

QUICK GUIDE TO EDITING TECHNIQUES

Technique	Operation	
Manual preroll editing	• Without 9-pin connection:	Accurate insert or assemble editing of input camera or tape signals is possible using the BR-S822E's PREROLL and AUTO EDIT buttons.
Manual run editing	• Without 9-pin connection:	Insert or assemble editing of input camera or tape signals is possible directly from the Play mode.
Automatic swap editing	• With 9-pin connection:	All operations for both player and recorder can be controlled directly at the recorder. Once edit IN and OUT points have been entered, editing is automatic. Automatic insert and assemble editing are both possible.
A/B roll editing (See instructions of the editing control unit.)	• With 9-pin editing controller:	Automatic editing from two source players is possible. When a special effects generator is incorporated in the edit suite, special effects such as mixes, wipes, and fades can be applied to the edits. An audio mixer can be also incorporated in the edit suite for enhanced audio flexibility.

For Swap Editing

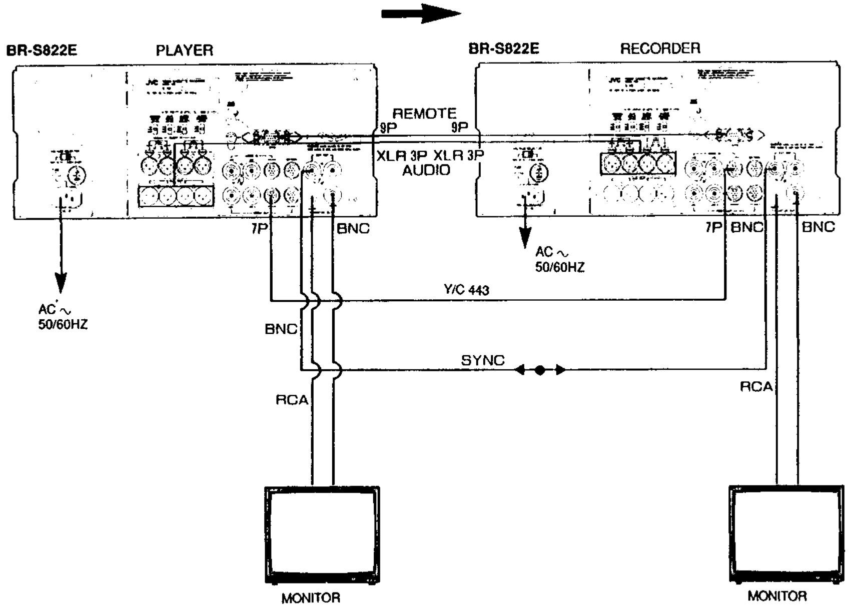
BR-S822E
PLAYER
BR-S822E
RECORDER
REMOTE
9P
9P
XLR 3P XLR 3P
AUDIO
7P
BNC
7P
BNC
BNC
AC∿
50/60HZ
AC∿
50/60HZ
Y/C 443
BNC
SYNC
RCA
RCA
MONITOR
MONITOR

NOTES:

- To avoid distortion of the recorder's playback signal while the player is in the search mode, connect an external sync signal generator.
- If the player doesn't have an auto H-phase function, editing with the external sync signal may produce skew at the top of the edited picture.
- To avoid distortion or missing colours caused by unstable input signals, the player's signal should be processed by a TBC. (If you are using the BR-S822E or BR-S622E as the player, install the optional TBC board SA-T22E or connect an external TBC to the player. Set the player's TBC switch to ON.)
- Be sure to set the recorder's INT/EXT switch to INT in cases where the player doesn't have a TBC or the colour frame is not locked to EXT SYNC (eg. when connecting to the BR-S811E and SA-F911E.).

For A/B Roll Editing

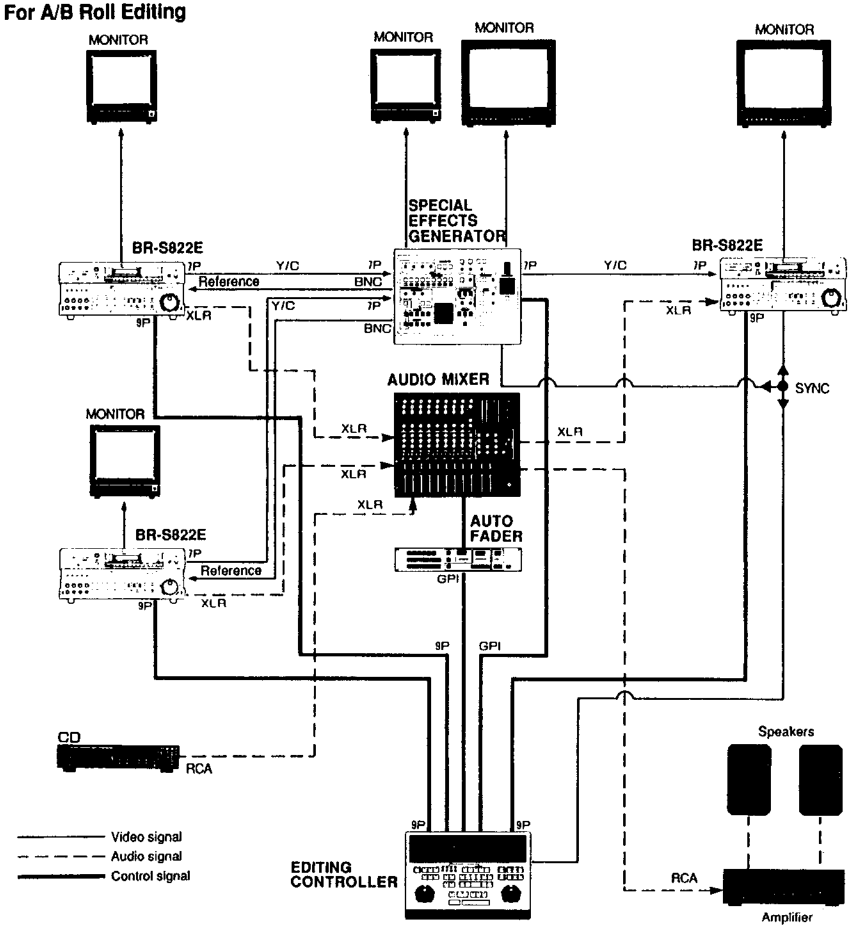
MONITOR
MONITOR
MONITOR
MONITOR
SPECIAL EFFECTS GENERATOR
BR-S822E
BR-S822E
7P
Y/C
7P
Reference
BNC
Y/C
7P
BNC
XLR
9P
7P
Y/C
7P
XLR
9P
SYNC
AUDIO MIXER
XLR
XLR
XLR
XLR
MONITOR
BR-S822E
7P
Reference
XLR
9P
AUTO FADER
GPI
9P
GPI
CD
RCA
Speakers
9P
9P
EDITING CONTROLLER
RCA
Amplifier
Video signal
Audio signal
Control signal

NOTES:

- If the special effects generator includes a TBC, set the player's TBC to OFF.

PREPARING RECORDING TAPES FOR EDITING

For Assemble Edits
When starting assemble editing from the beginning of a tape, or after a blank in the middle of tape, CTL signals must be recorded before the first edit-in point for a period exceeding the preroll time.

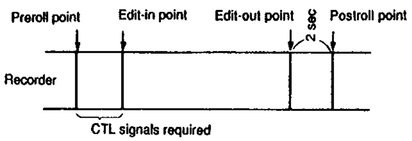

- Since the full erase head operates in assemble editing, a non-recorded segment is produced after the postroll point. If assemble editing is applied in the middle of a recorded tape, the picture will be distorted after the postroll point.

For Insert Edits
Record CTL signals before editing. At minimum, CTL signals must be continuously recorded in the section shown in the figure below.

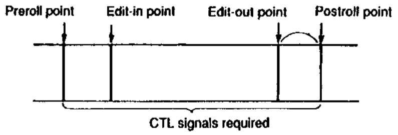

- To record CTL signals on blank tape, set the VIDEO INPUT switch to BLACK and engage the Record mode.
- The edit-in point cannot be specified at the very beginning of a tape. Allow for a section corresponding to the preroll time before the first edit-in point.
- The LTC signal may leak onto normal audio-1 during LTC insert editing. When playing back such a tape, turn the TRACKING control fully clockwise.

- Preroll time
  It takes a few seconds for tape running to stabilize after starting. To ensure that tape running is stable before it reaches an edit point, the tape must start running before the edit-in point (prerolling). The preroll time can be set via menu item #320. (☞ p.41)

- Colour frame editing
  If the player and the recorder's colour frames do not match, missing colour or colour phase reverse may occur at the edit IN point. In this case, set menu item #000 to "01 — 4 FIELD". (☞ p.38)

MANUAL EDITING

When editing from a camera or a VCR not connected to one of the BR-S822E's remote terminals, it is still possible to edit smoothly and accurately using the BR-S822E's AUTO EDIT and PREROLL buttons (Preroll Editing). Run editing is also possible using the EDIT button.

- Connect all necessary components correctly.
- Make all necessary preparations for recording. (☞ p.21)
- Set menu item #000 to "01 — 4 FIELD". (☞ p.38)

PREROLL EDITING

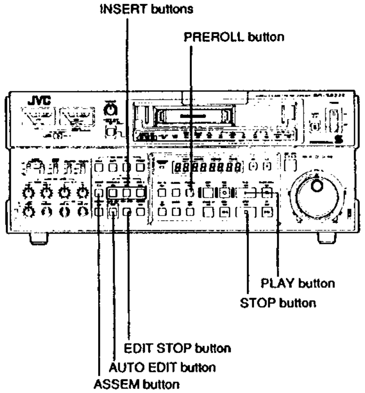

1. Select the editing mode.
   - Press ASSEM for assemble editing. All available input channels will be recorded.
   - Press one or more of the INSERT buttons for insert editing. Only the selected input channels will be recorded.

   VIDEO/Hi-Fi: The previously-recorded video/Hi-Fi audio signal will be replaced. Video and Hi-Fi cannot be inserted separately.
   AUD-1: The previously-recorded audio-1 soundtrack will be replaced.
   AUD-2: The previously-recorded audio-2 soundtrack or LTC will be replaced.
2. Press PLAY.
   - Playback starts.
3. Search for the edit IN point.
   - Use the Jog/Shuttle controls to locate the IN point.
4. Engage the Still mode at the IN point.
5. Press PREROLL.
   - The recorder will automatically rewind 7 seconds of programme time and enter the Stop mode.
6. Operate the player or camera as required.
7. Press AUTO EDIT to start editing.
   - The tape is played back for 7 seconds. Recording starts automatically at the edit IN point.
8. Press EDIT STOP to stop editing.
   - The recorder enters the Still mode.
   - To continue preroll editing, repeat steps 3 to 7.
9. To end preroll editing, press STOP .

NOTES:
- Insert editing is not possible if the recording tape does not have properly-recorded CTL signals.
- Insert editing will stop automatically if a tape segment without properly-recorded CTL is reached.

RUN EDITING

This type of editing allows you to edit directly from the Play mode. It is particularly useful in situations where you're editing stable, unchanging camera images (titles, stills, etc.) onto a prerecorded tape.

- Connect all necessary components correctly.
- Make all necessary preparations for recording. (☞ p.21)

1. Select the editing mode.
   - Press ASSEM for assemble editing. All available input channels will be recorded.
   - Press one or more of the INSERT buttons for insert editing. Only the selected input channels will be recorded.

   VIDEO/Hi-Fi: The previously-recorded video/Hi-Fi audio signal will be replaced.

   AUD-1: The previously-recorded audio-1 soundtrack will be replaced.

   AUD-2: The previously-recorded audio-2 soundtrack or LTC will be replaced.
2. Press PLAY.
   - Playback starts.
3. Press EDIT and PLAY simultaneously to start editing.
4. To stop run editing, press PLAY or STOP .

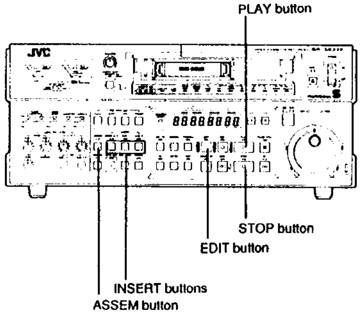
PLAY button
STOP button
EDIT button
INSERT buttons
ASSEM button

AUTOMATIC EDITING

This recorder is fully equipped for programmed automatic assemble and insert editing in conjunction with a player equipped with a 9-pin serial remote connector (such as the BR-S622E). IN and OUT points can be preset for frame-accurate automatic editing and full control over all player operations is possible directly from the recorder.

OPERATION FLOWCHART

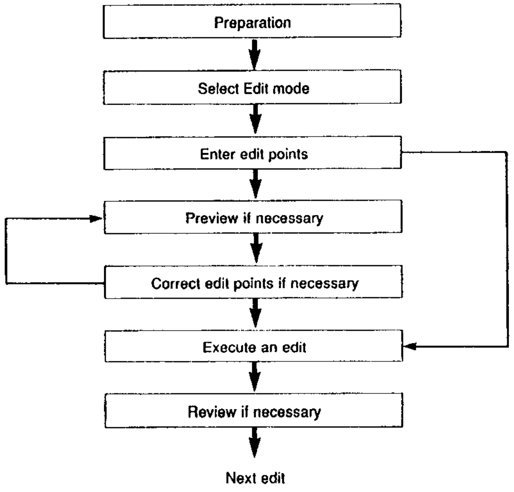
Preparation
Select Edit mode
Enter edit points
Preview if necessary
Correct edit points if necessary
Execute an edit
Review if necessary
Next edit

PREPARATION

- Make sure all components are connected correctly.
- Connect the BR-S822E's 9-pin connector to the player's 9-pin connector.
- Set the player's REMOTE select switch to 9-PIN.
- Set the player's menu item #000 to "01 — 4 FIELD".
- Set the BR-S822E's REMOTE select switch to LOCAL.
- Make all necessary preparations for recording. (☞ p.21)

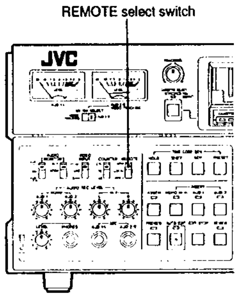
REMOTE select switch

ON-SCREEN EDIT DATA DISPLAY

All edit data including IN/OUT points for both player and recorder can be displayed on-screen when the REMOTE select switch is set to LOCAL.
To display edit data on-screen, set menu item #504 to "02 – EDIT DATA". For details on menu setting operation, refer to "Setup Menu". (☞ p.37)

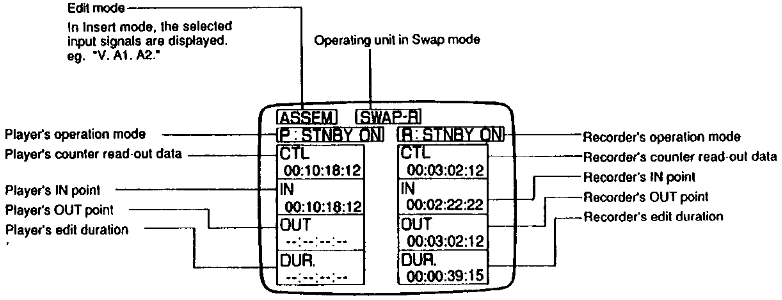

Edit mode
In Insert mode, the selected input signals are displayed. eg. "V. A1. A2."
Operating unit in Swap mode
ASSEM
SWAP-R
P : STNBY ON
R : STNBY ON
CTL
00:10:18:12
CTL
00:03:02:12
IN
00:10:18:12
IN
00:02:22:22
OUT
--:--:--:--
OUT
00:03:02:12
DUR.
--:--:--:--
DUR.
00:00:39:15
Player's operation mode
Player's counter read-out data
Player's IN point
Player's OUT point
Player's edit duration
Recorder's operation mode
Recorder's counter read-out data
Recorder's IN point
Recorder's OUT point
Recorder's edit duration

PROCEDURE

Edit Mode Selection

1. Select the editing mode.
   - Press ASSEM for assemble editing. All available input channels will be recorded.
   - Press one or more of the INSERT buttons for insert editing. Only the selected input channels will be recorded.

     VIDEO/Hi-Fi: The previously-recorded video/Hi-Fi audio signal will be replaced.

     AUD-1: The previously-recorded audio-1 soundtrack will be replaced.

     AUD-2: The previously-recorded audio-2 soundtrack or LTC will be replaced.

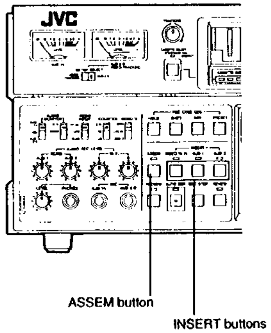

JVC
ASSEM button
INSERT buttons

Edit Point Entry

Enter the edit IN points for both the player and recorder, and the edit OUT point for either unit.

1. Press P (Player) or R (Recorder) to select the VCR to be operated.
   - The corresponding indicator will light.
2. Use the search functions to locate the edit IN point. (☞ p.19)
   - Engage the Still mode at the IN point.
3. Press IN and ENTRY simultaneously.
   - The edit IN point is entered.
4. Use the search functions to locate the edit OUT point.
   - Engage the Still mode at the OUT point.
5. Press OUT and ENTRY simultaneously.
   - The edit OUT point is entered.

NOTES:
- Edit point entry is also possible while the unit is in the Play mode.

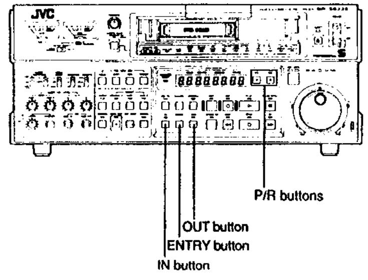

JVC
P/R buttons
OUT button
ENTRY button
IN button

Edit Point Correction

When a new edit point is entered, the previous edit point is automatically cancelled.
- To check the picture at an edit point, press the GO TO button while holding the IN or OUT button.
- To cancel an edit point without entering a new one, press the IN or OUT button together with the CANCEL button.
- To trim the IN or OUT point, turn the JOG dial while pressing the corresponding button.

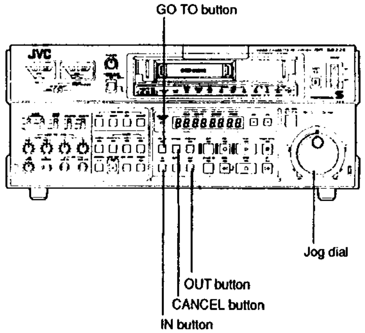

GO TO button
JVC
Jog dial
OUT button
CANCEL button
IN button

Edit Preview

1. Press PREVIEW.
   - The player and recorder rehearse the programmed edit, then enter the Still mode.'
   - This step can be omitted if desired.
2. Press STOP at any time to stop Preview.

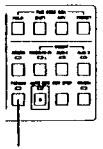

Executing An Edit

1. Press AUTO EDIT.
   - Automatic editing takes place. Editing starts and stops at the entered IN and OUT points.
   - If desired, you may switch input channels at any time during insert editing.
   - In assemble editing, the recorder continues recording for about 2 seconds after the OUT point, then rewinds and enters the Still mode at the OUT point. (This function can be defeated with the menu item #329 set to "01 – DISABLE".)
   - In insert editing, the recorder switches to the Play mode at the OUT point and continues playback for about 2 seconds after the OUT point, then rewinds and enters the Still mode at the OUT point. (This function can be defeated with the menu item #329 set to "01 – DISABLE".)
   - Press the EDIT STOP button if you want to cancel the editing operation before the designated OUT point. The recorder will enter the Still mode.

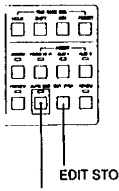

Edit Review

1. Press REVIEW on completion of the edit.
   - The VCR will play back the completed edit for review.
   - This step can be omitted if desired.

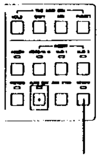

COUNTER DISPLAY

The BR-S822E's time counter shows tape time in hours, minutes, seconds, and frames in both CTL and TC modes. It also displays user bits, edit IN/OUT points, edit duration, menu settings, and warning codes.

Resetting the counter
In the CTL mode, you can press the COUNTER RESET button to reset the time counter to zero.

NOTES:
- Stored edit points will be cleared if the COUNTER RESET button is pressed.
- The counter cannot be reset during preroll and automatic editing.

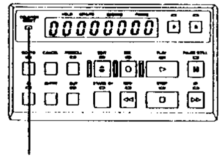

Edit point display
- To display the IN point, press IN.
- To display the OUT point, press OUT.
- The edit point is displayed only while the IN or OUT button is being pressed.

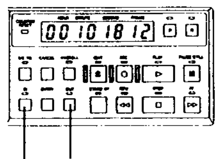

Edit duration display

- Press IN and OUT simultaneously. The counter shows edit duration in hours, minutes, seconds, and frames.

NOTE:
- For details on menu setting and warning code displays, ☞ p. 37 and p. 47.

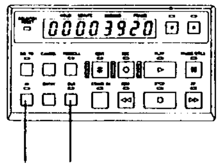

SETUP MENU

OPERATION

By engaging the Menu Set mode, you can cancel any preset functions that you don't require or change certain parameters as desired.

1. Set the MENU SET switch to ON.
   - The set-up menu appears on the monitor screen. The counter display will also switch to the Menu Set mode.
   - The Menu number (000) for the first item will blink.
2. Turn the Jog dial to locate the item you want to set.
   - Turning the dial clockwise increments the setting items (000→001→100, etc.); turning it counterclockwise, decrements the setting items.
3. When you locate an item you wish to change, press PLAY.
4. Press PLAY again to change the setting.
5. To continue setting, repeat steps 2 to 4.
6. Press REC to store the new settings.
7. To exit the menu, set the MENU SET switch to OFF.

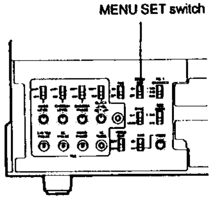

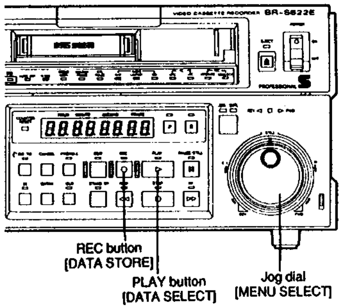

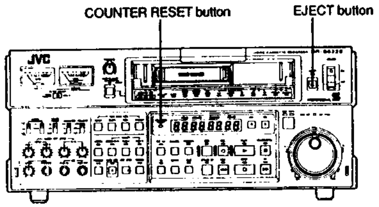

NOTE:
- All menu items can be automatically restored to their initial settings. To do this, first switch off the VCR's power. Then, while pressing COUNTER RESET and EJECT simultaneously, switch on the power. All menu items will have been restored to their initial settings.
- Some of the menu items cannot be set during the VCR is in the Record mode. We recommend that menu setting be done in the Stop mode.

MENU SETTINGS

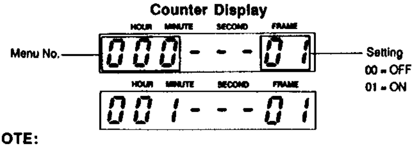

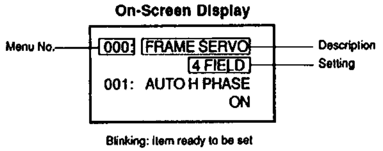

NOTE:
For items with more setting variations, 02, 03 ... are displayed.
In such cases, 00/01 does not mean OFF/ON.

(Initial settings are in brackets.)

Menu No.		On-Screen Description	Settings		Explanation
			Counter	On-Screen	
SERVO	000	FRAME SERVO	00	OFF	OFF: To defeat Frame Servo. When random-interlaced or low-S/N video signals are used, set to OFF.
			[01]	[4 FIELD]	4 FIELD: To use Colour Frame Servo when editing in colour frame servo mode.
			02	2 FIELD	2 FIELD: To use Frame Servo.
	001	AUTO H PHASE	00	OFF	OFF: To defeat Auto H-Phase Lock. Set to OFF for animation or CG recording.
			[01]	[ON]	ON: To use Auto H-Phase Lock. Normally set to ON.
VIDEO	100	SWITCHING POINT *1	[00]	[REC6.5H, PB4.5H]	Selects head switching point. REC6.5H, PB4.5H: To position head switching point 6.5H ahead of V sync in recording, and to shift it 2H in playback (1H lower than normal). Normally use this setting.
			01	REC6.5H, PB5.5H	REC6.5H, PB5.5H: To position head switching point 6.5H ahead of V sync in recording, and to shift it 1H in playback.
			02	REC2.25H, PB1.25H	REC2.25H, PB1.25H: To position head switching point 2.25H ahead of V sync in recording, and to shift it 1H in playback. Use this setting when you want a lower switching point for closed-circuit systems.
	101	S-VHS REC. EQ.			Selects video frequency response according to the characteristics of the tape used.
			00	TAPE TYPE-1	TAPE TYPE-1: Do not use this setting.
			[01]	[TAPE TYPE-2]	TAPE TYPE-2: Professional-S tape or other double-coated tapes.
			02	TAPE TYPE-3	TAPE TYPE-3: S-VHS master tape.
			03	TAPE TYPE-4	TAPE TYPE-4: Do not use this setting.
	102	U-VCR Y/C MODE			Selects the mode of the signal output via rear panel OPTION (Y-686/924) connector. (Effective with SA-E92E board)
			[00]	[CONV.]	CONV.: To output Y-686/924 dubbing signal to conventional 3/4" U-VCR machines.
			01	HB/SP	HB/SP: To output Y-686/924 dubbing signal to 3/4" U-VCR SP or Hi-Band machines.
	103	WIDE ASPECT ID REC.			Selects recording in wide aspect format (16:9 aspect ratio) or normal format (4:3 aspect ratio).
			[00]	[AUTO]	AUTO: Automatically detects wide aspect ID of input signal (Y/C input only) and records in wide aspect format.
			01	WIDE	WIDE: Records in wide aspect format regardless of the format of input signal. When recording wide-aspect pictures via composite input, use this setting.
			02	NORM.	NORM.: Records in normal aspect format regardless of the format of input signal.

Menu No.		On-Screen Description	Settings		Explanation
			Counter	On-Screen	
VIDEO	104	COMPONENT OUT LEVEL *	[00] 01	[LOW] HIGH	Selects the level of component signals output via rear panel Y/R-Y/B-Y connectors. (Effective with SA-T22E) LOW: To output component signals to MII machines. HIGH: To output component signals to Betacam machines.
AUDIO	200	Hi-Fi AUDIO REC.	00 [01]	OFF [ON]	OFF: To defeat Hi-Fi audio recording. ON: To record Hi-Fi audio.
	201	NORM. AUDIO DOLBY NR	00 [01]	OFF [ON]	OFF: To defeat Dolby NR circuit for normal audio. ON: To activate Dolby NR circuit for normal audio.
	202	AUDIO LIMITER	00 [01]	OFF [ON]	OFF: To defeat audio limiter for normal audio tracks. ON: To activate audio limiter for normal audio tracks to avoid over-level recording. (Audio recording level adjustment is possible with limiter ON.)
	203	AUDIO OUT	[00] 01 02	[SEP.] Hi-Fi NORM	Selects output signals via rear panel AUDIO OUT connectors. SEP.: To output as labelled: normal audio from NORMAL AUD-1/AUD-2, Hi-Fi audio from Hi-Fi L/R. Hi-Fi: To output Hi-Fi audio from all connectors: NORMAL AUD-1 outputs Hi-Fi left-channel signal and NORMAL AUD-2 outputs Hi-Fi right-channel signal. NORM: To output normal audio from all connectors: Hi-Fi L outputs normal audio-1 signal and Hi-Fi R outputs normal audio-2 signal.
	204	Hi-Fi OUT AT SEARCH	[00] 01	[MUTE] NORM	Selects output signals via rear panel Hi-Fi AUDIO OUT connectors during search. MUTE: To output muted Hi-Fi audio. NORM.: To output normal audio.
	205	AUD-1 REC.	[00] 01	[AUD-1] AUD-1/2 MIX	Selects audio signals to be recorded on the normal audio-1 track. AUD-1: Audio signals input to AUD-1 are recorded. AUD-1/2 MIX: Mixed audio signals input to AUD-1 and AUD-2 are recorded. (Levels are controlled independently with the corresponding control.) Nothing is recorded on the normal audio-2 track unless menu item #206 is set to "01 – LTC".
	206	AUD-2/LTC *2	[00] 01	[AUD-2] LTC	Selects signals to be recorded on the normal audio-2 track. AUD-2: Audio signals input to AUD-2 are recorded. LTC: LTC signal is recorded.
SYSTEM	300	DIRECT EJECT	00 [01]	DISABLE [ENABLE]	DISABLE: EJECT command is accepted only from Stop mode. ENABLE: EJECT command is accepted from any mode.
	301	DIRECT SEARCH	00 [01]	DISABLE [ENABLE]	DISABLE: Jog/Shuttle dials do not function unless JOG/SHTL button is pressed first. ENABLE: Jog/Shuttle dials function directly from Stop, Play, Still, FF and REW modes.
	302	AUTO REC. PREROLL	00 [01]	DISABLE [ENABLE]	DISABLE: Enters Record-Pause mode without preroll. Picture will be distorted at record-start point. ENABLE: Enters Record-Pause mode with preroll of about 3 seconds.
	303	WARNING INHIBIT	[00] 01	[OFF] ON	OFF: Malfunctions are detected for warning indications. Normally keep set to this position. ON: Detection of malfunctions is inhibited. No warning indication is available.
	304	RECORDING INHIBIT	[00] 01	[OFF] ON	OFF: Recording is possible with cassettes with safety tab in place. ON: Recording is inhibited regardless of the presence of safety tab. Use this position if the VCR is used only as a player.
	305	REPEAT REC.	[00] 01	[DISABLE] ENABLE	This setting is for manufacturer adjustment purposes only. Always keep set to DISABLE.
SYSTEM	306	LONG PAUSE	00 [01]	DISABLE [ENABLE]	DISABLE: To defeat Long Pause function. ENABLE: To use Long Pause function in Standby-On, Still and Record-Pause modes. (Long Pause parameters are selected with menu items #307, #308 and #309.)
	307	LONG PAUSE TIME	00 01 02 03 04 05 06 [07]	1 SEC 10 SEC 30 SEC 1 MIN 2 MIN 3 MIN 4 MIN [5 MIN]	With menu item #306 set to ENABLE, selects the length of time before normal Pause (Standby-On, Still and Record-Pause) mode changes to Long Pause.
	308	LONG PAUSE (STILL)	00 01 [02]	STANDBY-OFF T. RELEASE [STEP FWD]	Selects the contents of Long Pause mode. (After the time set with menu item #307 expires in Still or Record-Pause mode, the VCR operates as specified.) STANDBY-OFF: Enters Standby-Off mode. T. RELEASE: Tension arm is released for tape protection. Still pictures continue to be available. STEP FWD: Tape advances in slow-motion for about 2 seconds (about 2 frames). This action is repeated 5 times at the time intervals set with menu item #307. The VCR enters the Standby-Off mode after the final interval.
	309	LONG PAUSE (STOP)	[00] 01 02	[STANDBY-OFF] T. RELEASE STEP FWD	Selects the contents of Long Pause mode. (After the time set with menu item #307 expires in the Standby-On mode, the VCR operates as specified.) STANDBY-OFF: Enters Standby-Off mode. T. RELEASE: Tension arm is released for tape protection. STEP FWD: Tape advances in slow-motion for about 2 seconds (about 2 frames). This action is repeated 5 times at the time intervals set with menu item #307. The VCR enters the Standby-Off mode after the final interval.
	310	STANDBY-OFF MODE	00 [01] 02	DRUM ON [DRUM OFF] UNLOAD	Selects the status of Standby-Off mode. DRUM ON: Head drum continues to rotate with tape loaded. DRUM OFF: Head drum stops rotating with tape loaded. UNLOAD: Head drum stops rotating and tape unloads.
	311	MODE AT TAPE BEGIN	[00] 01	[SHORT-FF] PLAY	Selects the mode entered when the beginning of the tape is detected. SHORT-FF: Fast-forwards the leader section and enters Standby-On mode. PLAY: Enters Play mode.
	312	MODE AT TAPE END	[00] 01	[SHORT-REW] REW	Selects the mode entered when the end of the tape is detected. SHORT-REW: Rewinds the leader section and enters Standby-On mode. REW: Rewinds to the beginning of tape and enters Standby-On or Play mode depending on the setting of menu item #311.
	313	PB-PB/EE	00 [01]	PB/EE [PB]	Selects output signal in the mode specified with menu item #314. PB/EE: Outputs EE signal. PB: Outputs playback signal.
	314	PB/EE MODE	[00] 01	[STOP /FF/REW] STOP	Selects the mode in which EE signal is output. STOP /FF/REW: EE signal is output in Stop, FF and REW modes. STOP : EE signal is not output in FF and REW modes.
	315	LOCAL FUNCTION	[00] 01 02 03	[STOP ,EJECT] STP,EJ,PLY,FF,RW,STL ALL ENABLE ALL DISABLE	Selects functions that can be locally operated when front panel REMOTE switch is set to 9PIN or REM-2.

Menu No.		On-Screen Description	Settings		Explanation
			Counter	On-Screen	
SYSTEM	316	9PIN CMD FUNCTION	[00] 01	[ALL DISABLE] STOP ,EJECT	Selects 9-pin remote control commands that are acceptable when front panel REMOTE switch is set to LOCAL. ALL DISABLE: Accepts no command from 9-pin remote control. STOP ,EJECT: Accepts STOP and EJECT commands only. (Note: With some remote controls, no command is accepted.)
	317	9PIN DEVICE TYPE ID	[00] 01 02 03	[JVC SVHS-1] JVC SVHS-2 OTHER TYPE-1 OTHER TYPE-2	Selects device type ID returned from VCR to 9-pin remote control in response to its request. JVC SVHS-1: Use this setting with BR-S622E/BR-S822E. JVC SVHS-2: Use this setting if SA-F911E is included in the system. OTHER TYPE-1/OTHER TYPE-2: Consult a JVC dealer.
	318	TC DATA W/O TC BOARD	[00] 01	[TC MISSING] CTL DATA	Selects VCR's response to 9-pin remote control when remote control requests time code data when TC board is not installed. TC MISSING: VCR returns code meaning TC MISSING. CTL DATA: VCR returns substitute CTL data.
	319	TAPE MAX SPEED	[00] 01 02	[X100] X32 X16	Selects maximum tape speed (full-size cassette only). (FF and REW speeds also correspond to this setting. In the 100x mode, the EE signal is output. In the 32x and 16x search modes, the playback signal is output. The CTL signal is output in the 16x search mode using the RM-86U 45-pin remote control.)
	320	PREROLL TIME	00 ⋮ [07] ⋮ 15	0 SEC ⋮ [7 SEC] ⋮ 15 SEC	Selects preroll time in one-second steps from 0 to 15 seconds.
	321	TIME REF. FOR PREROLL	00 [01]	CTL [TC]	Selects time count reference for preroll in TC operation. CTL : Refers to CTL counts. Preroll is possible even when time codes are missing. TC : Refers to time codes.
	322	IN POINT AUTO ENTRY	00 [01]	NOT ENTERED [ENTERED]	Activates or defeats automatic IN point entry function. NOT ENTERED: IN point is not entered automatically by pressing PREROLL button. ENTERED: IN point is entered automatically by pressing PREROLL button if no IN point has been previously entered.
	323	MODE AFTER PREROLL	[00] 01	[STOP] STILL	STOP : Enters Stop mode after preroll is completed. STILL : Enters Still mode after preroll is completed.
	324	EDIT FIELD	[00] 01	[1st] 2nd	1st: Starts recording/editing on the first field and ends on the second field. 2nd: Starts recording/editing on the second field and ends on the first field. Use this setting when inserting two pictures in one frame for animation.
	325	CTL COUNTER MODE	[00] 01	[±9H] 24H	±9H: Counter shows from −9 to +9 hours in CTL mode. 24H: Counter shows from 0 to 24 hours in CTL mode.
	326	CTL COUNTER MEMORY	[00] 01	[OFF] ON	OFF: No counter memory function is available. ON: Enters Stop mode at CTL counter reading of zero in FF and REW modes.
	327	CTL CLEAR AT EJECT	00 [01]	DISABLE [ENABLE]	DISABLE: CTL counter is not reset when cassette is ejected. ENABLE: CTL counter is reset when cassette is ejected.
	328	EDIT POINT CLEAR	00 [01]	DISABLE [ENABLE]	DISABLE: IN and OUT points are not automatically cleared. ENABLE: IN and OUT points are automatically cleared after execution of an edit with AUTO EDIT button.

Menu No.		On-Screen Description	Settings		Explanation
			Counter	On-Screen	
SYSTEM	329	OUT POINT RETURN	00 [01]	DISABLE [ENABLE]	Activates or defeats OUT Point Return function. (After execution of an edit with AUTO EDIT button, tape automatically returns to the OUT point.)
	330	VIDEO EDIT DELAY	[00] 01	[8 FRAMES] 3 FRAMES	Selects the length of time before video recording starts after reception of EDIT command.
	331	AUDIO EDIT DELAY	[00] 01	[8 FRAMES] 3 FRAMES	8 FRAMES: To delay audio signals by 8 frames in editing for accurate synchronisation with video frames. Normally use this setting. 3 FRAMES: To delay audio signals by 3 frames. Use this setting only when the VCR is controlled via RM-86U remote control units.
	332	CASSETTE SEL. INHIBIT	[00] 01	[OFF] ON	OFF: Cassette size selection is possible with the CASSETTE SELECT button on the front panel. ON: Cassette size selection is inhibited.
	333	CF SERVO LOCK REPLY	00 [01]	DISABLE [ENABLE]	Selects information to deliver to 9-pin remote. DISABLE: Colour frame servo lock cannot be engaged. ENABLE: Colour frame is locked to 4-field colour framing mode.
	334	CF RE-LOCK AT PLAY	[00] 01	[DISABLE] ENABLE	Activates or defeats colour frame re-lock function when colour frame lock is disengaged in Play mode.
	350	SWAP VTR	[00] 01 02 03 04 05 06 07 08 09	[AUTO] PR-900 AUTO SA-F911 BR-S822 KR-M440 KR-M820 KR-M840 KR-M860 OTHER SVHS	Selects player type for swap editing. Normally use AUTO position.
	351	SYNCHRONIZE	00 [01]	DISABLE [ENABLE]	Activates or defeats Capstan Bump function in swap editing.
	352	SYNCHRONIZED VTR	[00] 01	[RECORDER] PLAYER	RECORDER: Applies capstan bump to recorder in swap editing with menu item #351 set to ENABLE. PLAYER: Applies capstan bump to player.
	353	SYNC GRADE	[00] 01 02 03	[ACCURATE] ±1 FRAME ±2 FRAME ROUGH	Selects editing accuracy after capstan bump. ACCURATE: In-phase editing at 0 frame accuracy. ±1 FRAME: In-phase editing at ± 1 frame accuracy. ±2 FRAME: In-phase editing at ± 2 frame accuracy. ROUGH: Editing starts when in-phase status is reached.
	354	SYNC GRADE AT RE-TRY	[00] 01	[NO CHANGE] DOWN	NO CHANGE: Applies same editing accuracy as set with menu item #353 when edit is re-tried. DOWN: Lowers editing accuracy of re-tries.
	355	AUTO-EE	[00] 01	[RECORDER ONLY] AUTO-EE	RECORDER ONLY: EE output is not available when "P" is pressed in swap editing. AUTO-EE: Recorder automatically switches to EE mode when "P" is pressed in swap editing. Convenient in one-monitor editing.
	356	MODE AT CF UNLOCK	00 01 [02]	EDIT STOP [RE-TRY]	Selects the VCR mode in cases where colour frame is unlocked when automatic editing or edit preview is started. EDIT: Executes editing or edit preview. STOP: Enters Stop mode. RE-TRY: Re-tries up to 3 times.

Menu No.		On-Screen Description	Settings		Explanation
			Counter	On-Screen	
TIME CODE	400	VITC POSITION-1	00 ⋮ [12] ⋮ 15	7LINE ⋮ [19LINE] ⋮ 22LINE	Selects the horizontal scanning line on which VITC data is stored. Selectable from line 7 to line 22 in the vertical blanking interval. • Do not select line 11 in S-VHS recording as this is reserved for AUTO EQ. • When using the SA-T22E TBC board, set above line 9.
	401	VITC POSITION-2	00 ⋮ [14] ⋮ 15	7LINE ⋮ [21LINE] ⋮ 22LINE	Selects the horizontal scanning line on which VITC data is stored. Selectable from line 7 to line 22 in the vertical blanking interval. (Two lines per field are used to store VITC data.) • Do not select line 11 in S-VHS recording as this is reserved for AUTO EQ signal. • When using the SA-T22E TBC board, set above line 9.
	403	TCG REGEN MODE	[00] 01 02	[TC & UB] TC UB	Selects code data to be regenerated in Internal Regen mode (with TC board's INT/EXT switch set to INT and PRESET /REGEN switch set to REGEN.) TC & UB: Records both time code and user bit data in Regen mode. TC: Records time code data in Regen mode and user bit data in Preset mode. UB: Records user bit data in Regen mode and time code data in Preset mode.
	404	TC SOURCE AT REGEN	[00] 01	[LTC] VITC	Selects the type of reference time code in the Regen mode. LTC : Reference code is LTC. VITC : Reference code is VITC.
	405	LTC OUT (REGEN)	[00] 01	[OFF TAPE] TCG	Selects output signal from TIME CODE OUT connector while playback is in progress in Internal Regen mode. OFF TAPE: Outputs time code signal picked up from tape. TCG: Outputs time code signal regenerated by TC generator.
	406	U-BIT BINARY GROUP	[00] 01 02 03	[NOT SPECIFIED] ISO CHAR. UNASSIGNED-1 UNASSIGNED-2	Selects character set configuration to use TC generator's user bits. NOT SPECIFIED: Character set configuration is not specified. ISO CHAR.: 8-Bit character set conforming to ISO 646 and ISO 2022 (with binary group flags at bit counts 43 and 59 in LTC; at 55 and 75 in VITC.) UNASSIGNED-1: Undefined. UNASSIGNED-2: Undefined.
	407	PHASE CORRECTION BIT	00 [01]	OFF [ON]	Selects recording of LTC phase correction bit (parity bit for bit error check). OFF : Not recorded. (Use this setting if 10s readout is not correct with external TC reader connected.) ON: Recorded.
	408	VITC LINE	[00] 01	[VITC MIX] CLEAN ONLY	Selects whether lines set with menu items #400 and #401 are to be cleaned in recording. VITC MIX: VITC is recorded after lines are cleaned. CLEAN ONLY: Lines are cleaned.
	409	EXT REGEN TC	[00] 01	[LTC] VITC	Selects the type of externally input reference time code in External Regen mode. LTC: To use LTC via TIME CODE IN connector. VITC: To use VITC via VIDEO IN connector.
	410	AUTO REGEN MODE	[00] 01 02 03	[ASM+INS] ASM INS OFF	Selects the edit mode in which time codes are recorded automatically in Regen mode regardless of PRESET/ REGEN switch setting in automatic editing. ASM+INS: Records in Regen mode in both Assemble and Insert modes. ASM: Records in Regen mode in Assemble mode only. INS: Records in Regen mode in Insert mode only. OFF: Records in the mode specified by PRESET/REGEN switch.

Menu No.		On-Screen Description	Settings		Explanation
			Counter	On-Screen	
ON-SCREEN	500	ON-SCREEN DISPLAY	00 [01]	OFF [ON]	OFF: No data is displayed on-screen. ON: Data is displayed on-screen.
	501	CHAR. H-POSITION	[00] ⋮ 08	[00] ⋮ 8	Adjusts on-screen VCR data display position in the horizontal direction. (Not effective when menu item #504 is set to 02.) 0 : VCR data is displayed at the rightmost position. 1 - 8: Display position shifts to the left with increasing numbers.
	502	CHAR. V-POSITION	[00] ⋮ 09	[00] ⋮ 9	Adjusts on-screen VCR data display position in the vertical direction. (Not effective when menu item #504 is set to 02.) 0 : VCR data is displayed at the bottom of screen. 1 - 9: Display position shifts up with increasing numbers.
	503	CHAR. BACKGROUND	[00] 01 02	[BORDER] SEMI. BLACK	BORDER: Displays bordered characters. SEMI.: Displays semi-transparent characters. BLACK : Displays characters on black background.
	504	INFORMATION	00 [01] 02	TIME [TIME & MODE] EDIT DATA	Selects available on-screen information. TIME: Time counter data. TIME & MODE: Time counter data, operation mode and Jog/Shuttle tape speed. EDIT DATA: Edit data in swap editing.
TBC	600	TBC FREEZE	[00] 01	[DISABLE] ENABLE	Selects the mode of still pictures in TBC operation. DISABLE: Outputs normal still pictures. ENABLE: Outputs 'freeze' still pictures from TBC's field memory when PAUSE/STILL button is pressed while in Play mode.
	601	V BLANK MASK	[00] 01	[OFF] ON	Activates or defeats vertical blanking interval masking function in TBC operation. OFF: No masking function. ON: Masks the entire vertical blanking interval in playback to erase VITC. VITC readout is impossible with this setting.

*1: When you set this item to "02 – REC 2.25H/PB 1.25H" in recording, be sure to set it to this position when playing back the tape in the TBC mode.

*2: When playing back a tape with no LTC recorded on the normal audio-2 track, set this item to "00 – AUD-2".

ROM VERSION/HOUR METER DISPLAY

By engaging the Menu Set mode, you can also check the numbers of device ROMs and the hour meter.

1. Set the MENU SET switch to ON.
   - The set-up menu appears on the monitor screen. The counter display will also switch to the Menu Set mode.
   - The Menu number (000) for the first item will blink.
2. Turn the Jog dial to locate items with numbers in the order of 900.
   - For quicker location, turn the Jog dial counterclockwise.

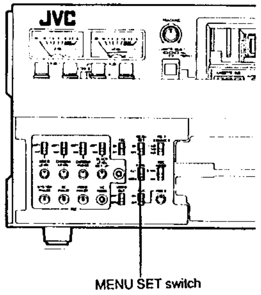

Counter Display

```
900---01
901---01
902---01
903-0000

908-0000
909-0000
910-0000
911-0000
```

On-Screen Display

```
900:SYSCON ROM Ver.
                 01
901:MECHACON ROM Ver.
                 01
902:OPERATION ROM Ver.
                 01
903:SLOT ROM Ver.
       NO CONNECT 00
   AVM/OS ROM Ver.
                 04
```

```
908:POWER HOUR METER
               0000H
909:DRUM HOUR METER
               0000H
910:CAP HOUR METER
               0000H
911:REEL HOUR METER
               0000H
```

Menu No.	On-Screen Description	Explanation
900	SYSCON ROM Ver.	Indicates version number of SYSCON ROM.
901	MECHACON ROM Ver.	Indicates version number of MECHACON ROM.
902	OPERATION ROM Ver.	Indicates version number of OPERATION ROM.
903	SLOT ROM Ver.	Indicates version number of SLOT ROM. This item also shows the type of remote control installed in the slot. Available indications are: JVC45PIN (20 on 5th and 6th digits on counter display) RS-232C (21 on 5th and 6th digits on counter display) NO CONNECT (00 on 5th and 6th digits on counter display)
---	AVM/OS ROM Ver.	Indicates version number of AV microcomputer/on-screen ROM.
908	POWER HOUR METER	Indicates the total time (up to 4 digits in hours) the VCR has been powered.
909	DRUM HOUR METER	Indicates the total working time of the drum motor in hours.
910	CAP HOUR METER	Indicates the total working time of the capstan motor in hours.
911	REEL HOUR METER	Indicates the total working time of the reel motors in hours.

CAUTION
Do not set the following three settings together:
Menu item #303 WARNING INHIBIT — 01 ON, #305 REPEAT REC. — 01 ENABLE and #306 LONG PAUSE — 00 DISABLE.
We are not responsible for any malfunctions caused by this combination of settings.

WARNING DISPLAY

DIAGNOSTIC CODES

The WARNING display uses numerical codes to indicate various malfunctions and warnings on the counter display. Worded warning messages are provided on-screen. In some cases, power must be turned off before the machine can be recovered. When the AUTO OFF indicator lights, power must be turned on and off again before the machine can be recovered.

	AUTO OFF Indicator	Dis-play code	WARNING (On-Screen Display)	Symptom/Operation
Sensors	YES	01	WARNING 01 LAMP FAILURE	Tape-end sensor LED burns out. The cassette will be ejected. All controls become inoperative.
	YES	02	WARNING 02 CONDENSATION ON DRUM	Moisture condensation on drum and in transport. The cassette is ejected. After ejection, the drum starts rotating and cassettes cannot be loaded until condensation has been eliminated. Do not turn the power off until the AUTO OFF indicator goes out.
	YES	08	WARNING 08 SUP TENSION FAILURE	Slack tape on the supply reel. All controls become inoperative.
Loading Mechanism		32	WARNING 32 FAILURE LOADING	Tape cannot load correctsy. Tape unloads and the cassette is ejected. The display turns off when a cassette is inserted again. Normal operation is restored.
	YES	33	WARNING 33 FAILURE UNLOADING	Tape cannot unload. All controls become inoperative.
Cassette Carriage	YES	41	WARNING 41 CASSETTE EJECT FAILURE	Cassette carriage does not lift during tape ejection (even after 3 seconds have passed). All controls become inoperative.
Leader Tape Detection		56*	WARNING 56 TAPE DEFECTIVE	Tape beginning and end sensors turn ON during loading because the tape is broken. The cassette is ejected. If the cassette fails to load properly, it may get stuck in the cassette slot. In this case, remove it by hand.The display turns off when an undamaged cassette is inserted. Normal operation is restored.
		57	WARNING 57 END LEADER DETECTION	Tape-end sensor turns ON during loading. Rewind mode is engaged. If the leader tape is detected within 3 seconds, the cassette is ejected. The display turns off when a cassette is inserted again. Normal operation is restored.
		58	WARNING 58 BEGIN LEADER DETECTION	Tape-beginning sensor turns ON during loading. FF mode is engaged. If the leader tape is detected within 3 seconds, the cassette is ejected. The display turns off when a cassette is inserted again. Normal operation is restored.

	AUTO OFF Indicator	Dis-play code	WARNING (On-Screen Display)	Symptom/Operation
Rotating System	YES	70	WARNING 70 DRUM MOTOR FAILURE	Drum motor stops. All controls become inoperative. Recovers when a cassette is inserted again.
	YES	71	WARNING 71 CAP MOTOR FAILURE	Capstan motor stops. All controls become inoperative. Recovers when a cassette is inserted again.
	YES	72	WARNING 72 SUP REEL MOTOR FAILURE	Supply reel rotates abnormally. All controls become inoperative. Recovers when a cassette is inserted again.
	YES	73*	WARNING 73 TU REEL MOTOR FAILURE	Take-up reel rotates abnormally. All controls become inoperative. Recovers when a cassette is inserted again.
Others	YES	04	WARNING 04 REEL SERVO FAILURE	Power supply to reel tension servo stops. All controls become inoperative.
		IE	INVALID OPERATION	Invalid command has been given. (eg. S-VHS recording on a VHS cassette, Record or Edit command with VCR set to RECORDING INHIBIT, etc.)

* Cassette insertion is not possible if the cassette slot remains open after cassette ejection. In this case, press the EJECT button to close the slot door, and insert the cassette again.

TEST POINTS

The output signals from the Hi-Fi audio heads and video heads are available at the front panel test points. Connect an oscilloscope to these test points to check the VCR's performance and condition.

Connection	Items to be checked	Standard waveform
Hi-Fi audio head output 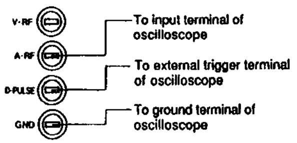 V-RF A-RF D-PULSE GND To input terminal of oscilloscope To external trigger terminal of oscilloscope To ground terminal of oscilloscope	• Tape-to-head contact • Tape running stability • Inferior RF after head replacement • RF recording level	• "+" triggered 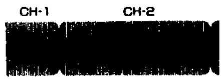
Video head output 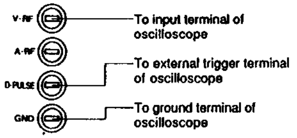 V-RF A-RF D-PULSE GND To input terminal of oscilloscope To external trigger terminal of oscilloscope To ground terminal of oscilloscope	• Compatibility of tape pattern • Tape-to-head contact • Tape running stability • Tracking • Video signal recording level • Abnormality in RF Use a 10:1 probe	• "+" triggered 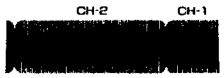

AUTOMATIC EQUALISER

To prevent deterioration of the luminance signal frequency caused by worn heads, or when using tapes with different signal characteristics or that have been over-played, the BR-S822E incorporates an automatic equaliser (AUTO EQ) circuit which functions in the S-VHS mode. The reference signal to operate this circuit is added to one H line of the vertical blanking time. Prior to shipment, the BR-S822E is preset to add the reference signal to line 11. If VITC (Vertical Interval Time Code) or VITS (Vertical Interval Test Signal) is inserted in this line, these signals will be erased. If you do not want these signals erased, consult a JVC service agent.

NOTE:
The AUTO EQ circuit does not function if the reference signal reading position differs from the position of the reference signal added in recording. It will also malfunction if VITC or VITS is recorded at the reference signal reading position.

INSTALLATION

RACK MOUNTING

Using the optional SA-K63UB Rack Mount Adapter, you can install the BR-S822E in a 19" EIA-standard rack.

- Use a complete slide and bracket unit such as the Accuride slide and bracket unit (Part No. C-2038-22/BK-2038).
- For more details, consult your local JVC service agent.

1. Attach the inner members of the slide rails with screws as illustrated. (Screws should be no more than 8 mm long.)
2. Attach the SA-K63UB rack mount adapter.

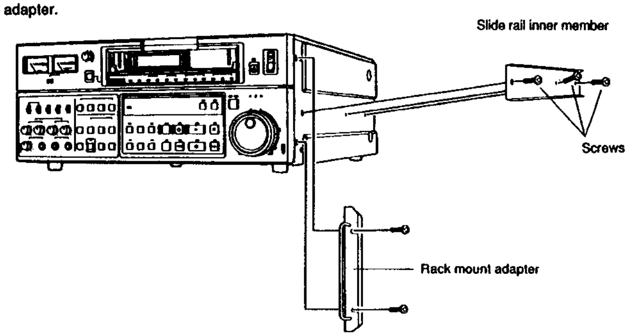
Slide rail inner member
Screws
Rack mount adapter

3. Attach the right and left brackets and outer members of the slide rails to the rack.
   - When installing the bracket at the back of the rack's panel surface.

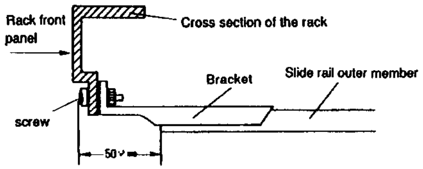
Rack front panel
Cross section of the rack
Bracket
Slide rail outer member
screw
50 ~

- When installing the bracket at the front of the rack's panel surface.

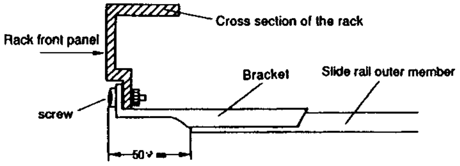
Rack front panel
Cross section of the rack
Bracket
Slide rail outer member
screw
50 ~

* Adjust the distance between the front panel and the slide rail to between 50 and 55 mm.

4. Check that the unit slides in and out smoothly.

NOTE:

- The rack mount adapter handle is only for sliding the unit. Do not carry the unit holding the handle.
- Leave enough space at the back of the unit (at least 10 cm) for ventilation and connections.

CONNECTOR SPECIFICATIONS

9-Pin Remote Connector

Pin No.	Local	Remote
1	GND	GND
2	RECEIVE A	TRANS A
3	TRANS B	RECEIVE B
4	GND	GND
5	—	—
6	GND	GND
7	RECEIVE B	TRANS B
8	TRANS A	RECEIVE A
9	GND	GND

Y/C 443 7-Pin Connector

Pin No.	Signal
1	Y SIGNAL
2	GND (Y SIGNAL)
3	—
4	—
5	C SIGNAL
6	GND (C SIGNAL)
7	—

XLR 3-Pin Connector

Pin No.	Signal
1	GND
2	COLD
3	HOT

15-Pin Remote Connector (option)

Pin No.	Signal
1	FG
2	+12V
3	GND
4	VIDEO LEVEL
5	CHROMA LEVEL
6	CHROMA PHASE
7	SET UP LEVEL
8	RSVD DC 1
9	RSVD DC 2
10	REMOTE EN
11	FREEZE EN
12	RSVD CTL 1
13	RSVD CTL 2
14	OPERATE
15	GEN LOCK

45-Pin Remote Connector (option)

1	GND	◁	
2	REC CMD	◁	⊔
3	STOP CMD	◁	⊔
4	PLAY CMD	◁	⊔
5	FF CMD	◁	⊔
6	REW CMD	◁	⊔
7	FWD CMD	◁	⌉
8	SEARCH CMD	◁	⊔
9	REV CMD	◁	⌉
10	STILL CMD	◁	⊔
11	PREROLL CMD	◁	⊔
12	E. START CMD	◁	⊔
13	E. STOP CMD	◁	⊔
14	PREVIEW CMD	◁	⌉
15	REMOTE CMD	◁	⌉
16	A1 INS CMD	◁	⌉
17	A2 INS CMD	◁	⌉
18	V INS CMD	◁	⌉
19	SERVO LOCK	▶	
20	ASSEM CMD	◁	⌉
21	V SPEED CTL	◁	ANALOG
22	EDIT TALLY	▶	
23	STILL TALLY	▶	
24	SEARCH TALLY	▶	
25	PREROLL TALLY	▶	
26	FF TALLY	▶	
27	PLAY TALLY	▶	
28	STOP TALLY	▶	
29	REW TALLY	▶	
30	REC TALLY	▶	
31	TAPE REV	▶	
32	CTL PULSE	▶	
33	NC	▶	
34	12V DC	▶	
35	CTL PULSE	▶	
36	EE CMD	◁	⌉
37	X2 CMD	◁	⌉
38			
39	X1/5 CMD	◁	⌉
40	DFR STOP CMD	◁	⌉
41	X1 CMD	◁	⌉
42	EXTERNAL CAP SEARCH	◁	⌉
43	VHS	▶	
44			⌉
45	EJECT CMD	◁	

◁ TO VTR
▶ FROM VTR

⊔ PULSE ⌉ STATUS

Y-686/924 7-Pin Output (option)

Pin No.	Signal
1	GND (Y SIGNAL)
2	Y SIGNAL
3	—
4	—
5	C SIGNAL
6	GND (C SIGNAL)
7	COLOUR FRAME PULSE

SPECIFICATIONS

GENERAL

Format	: VHS/S-VHS Europe standard
Power consumption	: 90 W
Power requirment	: AC 110 – 127 V/220 – 240 V~, 50/60 Hz
Dimensions	: 42.9 (W) X 18.8 (H) X 56.5 (D) cm
Weight	: 23 kg
Operating temperature	: 5°C to 40°C
Storage temperature	: –20°C to 60°C
Tape speed	: 23.39 mm/sec
Recording & Playback time	: Max. 180 min. with JVC SE-180/E-180
Fast forward/ Rewind time	: Less than 2.5 min. for 180 min. tape

VIDEO

Recording and playback		: Rotary two-head helical scanning system
Luminance		: FM recording
Colour signal		: Phase shift, converted sub-carrier direct recording
Video signal system		: PAL-type colour signal/PAL-type Y/C signal
Input	Line	: 1.0 Vp-p, 75 ohms, unbalanced
	Y/C 443	: Y: 1.0 Vp-p, 75 ohms, unbalanced C: 0.3 Vp-p, 75 ohms, unbalanced (Burst)
Output	Line	: 1.0 Vp-p, 75 ohms, unbalanced
	Y/C 443	: Y: 1.0 Vp-p, 75 ohms, unbalanced C: 0.3 Vp-p, 75 ohms, unbalanced (Burst)
Signal-to-noise ratio		: More than 46 dB (S-VHS) More than 45 dB (VHS)
Horizontal resolution		: More than 400 lines (S-VHS) More than 250 lines (VHS)
Reference video input		: 0.3 to 1.0 Vp-p, 75 ohms, unbalanced (with loop-through, with the SA-T22E)
External sync input		: 0.3 to 4.0 Vp-p, 75 ohms, unbalanced (with one loop-through, without the SA-T22E)

AUDIO

Input	Line	: –6/0/+4 dBs, 10 k-ohms/600 ohms, balanced (Hi-Fi/Normal)
	Mic	: –67 dBs, 10 k-ohms, unbalanced
Output	Line	: –6/0/+4 dBs, Low impedance, balanced (Hi-Fi/Normal)
	Monitor	: –6 dBs, Low impedance, unbalanced
	Phones	: ∞ to –17 dBs, 8 ohms
Signal-to-noise ratio		: More than 43 dB (NR-off, Normal at 3% distortion)
Dynamic range		: More than 87 dB (Hi-Fi)
Frequency response		: 20 to 20,000 Hz (Hi-Fi) 40 to 12,000 Hz (Normal)
Wow & flutter		: Less than 0.005% WRMS (Hi-Fi) Less than 0.3% RMS (Normal)

TIME CODE

Input	: 0 dB ± 6 dBs, 10 k-ohms, unbalanced
Output	: 0 dB ± 3 dBs, Low impedance, unbalanced

CONNECTORS

Video	Line input	: BNC-type connector
	Line output	: BNC-type connectors
	Y/C 443 input/output	: 7-pin connectors
	Monitor	: BNC-type connector
Audio	Hi-Fi input/ output	: XLR connectors
	Normal input/ output	: XLR connectors
	Monitor	: RCA connector
Remote control		: 9-pin connector

ACCESSORIES

Provided accessories : 7-pin cable

Design and specifications subject to change without notice.

INSTRUCTIONS

JVC

BR-S622E

VIDEO CASSETTE RECORDER
VIDEOKASSETTENREKORDER
MAGNETOSCOPE A CASSETTE

S VHS 625 VHS PAL Hi-Fi

CONTROLS AND CONNECTORS

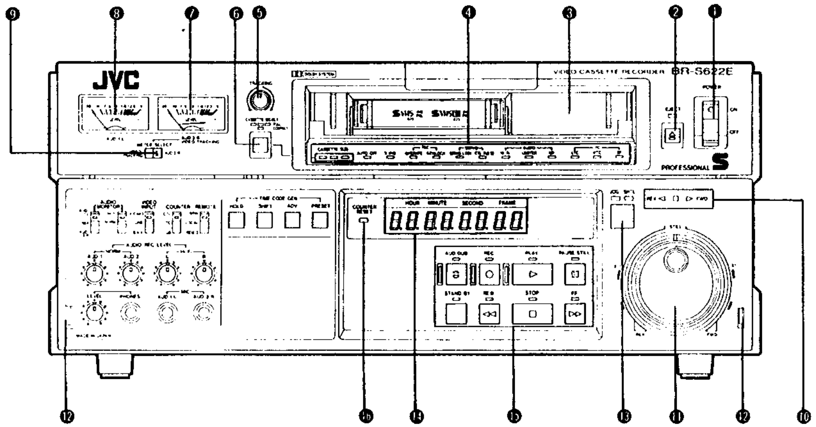

❶ **POWER switch**
- When power is ON, the time counter and level meters will be illuminated.

❷ **EJECT button with LED indicator**
- Ejects the cassette (from any mode).
- The indicator lights while the cassette is being ejected.

❸ **Cassette loading slot**
- Accepts either a compact or full-size S-VHS/VHS cassette according to the type selected with the CASSETTE SELECT button ❻.

❹ **LED indicators**

CASSETTE SIZE indicators
- Indicate whether the recorder is in the Full or Compact mode. When all three indicators are blinking, the recorder is ready to accept a full-size cassette. When only the centre indicator is blinking, the recorder is ready to accept a compact cassette. Press the CASSETTE SELECT button ❻ to change modes. When a cassette is inserted, the blinking will stop and the corresponding indicator(s) will remain continuously lit.

AUTO OFF indicator
- Lights when the unit malfunctions. All other controls are disabled.

S-VHS indicator
- Lights when an S-VHS or S-VHS-C cassette is inserted with the unit in the S-VHS mode, or when playing back a blank part of the tape.
- Blinks when S-VHS recording is attempted with a VHS cassette.

TBC indicators
(with optional SA-T22E TBC installed)

OPERATE:	Lights when the TBC is in operation. A timebase-corrected signal is output.
GENLOCK:	Lights when the TBC is in operation and locked to the external reference signal.

SERVO indicators

SERVO LOCK:	Lights when the capstan and drum servos are locked to the reference signal.
CTL PULSE:	Lights during playback of a tape with no control pulse recorded.
COLOUR FRAME:	Lights when the capstan and drum servos are locked to PAL 4-field colour frame.

AUDIO indicators

Hi-Fi:	Lights when the Hi-Fi REC circuit is ON (via menu setting) or when playing back Hi-Fi-recorded tapes.
LIMITER:	Lights when the built-in audio limiter circuit is set to ON (via menu setting).
NR:	Lights when the Dolby B* noise reduction circuit is set to ON (via menu setting).

TC (TIME CODE) indicators
(with optional SA-R22E TC [time code] generator/reader installed)

LTC:	Lights green when LTC-recorded tapes are played back with the normal audio-2 track set for LTC use (via menu setting). If LTC is not picked up, the indicator lights orange. This indicator may also light green when normal-audio-recorded tapes are played back.
VITC:	Lights when VITC-recorded tapes are played back or when recording a VITC signal.

❺ **TRACKING control**
- Adjusts tracking. Turn in either direction until the tracking meter deflects all the way to the right.
- Normally leave in the centre click-stop position.

❻ **CASSETTE SELECT button**
- Press to select FULL or COMPACT. The corresponding indicator(s) will light.

❼ **AUD-2/R (VIDEO/TRACKING) level meter**
- Indicates the audio level of the normal audio-2 or Hi-Fi right-channel signal during recording and playback.
- Functions as a video level meter during recording and as a tracking meter during playback when the METER SELECT switch ❾ is set to VIDEO/TRACKING.

❽ **AUD-1/L level meter**
- Indicates the audio level of the normal audio-1 or Hi-Fi left-channel signal during recording and playback.

❾ **METER SELECT switch**
- Switches the AUD-2/R level meter ❼ between audio level and video level indication.

AUD-2/R:	Meter functions as the audio-2/Hi-Fi right-channel level meter.
VIDEO/TRACKING:	Meter functions as a video level meter in recording, and as a tracking meter in playback.

❿ **Tape direction indicators**
- Indicate the current tape direction.

▷ : Forward
□ : Still
◁ : Reverse

⓫ **JOG/SHUTTLE dials**
- Dual concentric controls. The outer functions as a Shuttle ring, the inner as a Jog dial. The Jog and Shuttle modes can be entered directly from the Play, Still, FF, REW, or Stop modes.

SHUTTLE ring:	Search speed can be varied continuously from 1/30 to 32 times normal (up to 14 times normal with C-size cassettes) in forward or reverse. Set to the centre click-stop position to engage the Still mode.
JOG dial:	Manual frame-by-frame search in either direction. Tape speed is determined by the speed of dial rotation. Releasing the dial engages the Still mode. Also used in edit point trimming, menu setting and TC/UB presetting.

⓬ **Control panel lock release buttons**
- To tilt the control panel, press these buttons and lift the panel at the same time. The panel can be tilted to 90° and locked at angles of 25°, 50°, and 75°.

⓭ **JOG/SHUTTLE button with JOG/SHTL mode indicators**
- Instantly re-activates the Shuttle mode with search speed determined by the current dial setting.

⓮ **Time counter**
- Shows tape time in hours, minutes, seconds, and frames.
- Displays edit-in and -out points.
- Displays user bits.
- Displays menu settings and warnings.

⓯ **Operation buttons with LED indicators**

PAUSE/STILL button
- Temporarily stops recording when pressed in the Record mode.
- Displays a still picture when pressed in the Play mode.

PLAY button
- Starts playback.
- Re-starts normal playback when pressed in the Still or Search mode.
- Starts recording when pressed together with the REC button.
- Starts audio dubbing when pressed together with the AUD DUB button in the Still mode.
- Re-starts recording when pressed in the Record-Pause mode.

REC button
- Starts recording when pressed together with the PLAY button.
- Outputs EE signals when pressed in the Play mode.
- Displays TC generator data when pressed in the Stop mode with REMOTE select switch ⓴ set to LOCAL. (Released by pressing STOP button.)

AUD DUB button
- Starts audio dubbing when pressed together with the PLAY button.

STAND BY button
- Switches the recorder between the Standby-On and Standby-Off modes while the VCR is in the Stop mode. Standby-On is automatically engaged when the Stop button is pressed.

Standby-On:	The tape is loaded and the drum is rotating. The indicator is lit.
Standby-Off:	The tape is loaded but tape tension is reduced and the drum does not rotate. The indicator is not lit.

REW button
- Starts rewind when pressed in any mode.

STOP button
- Engages the Stop mode (Standby-On). The tape stops, but remains in the full-loaded position with the drum rotating.
- The STOP and STAND BY indicators will light.

FF button
- Starts fast forward when pressed in any mode.

⓰ **COUNTER RESET button**
- Resets the CTL counter to zero.
- The CTL counter will be reset even if this button is pressed in the TC mode.

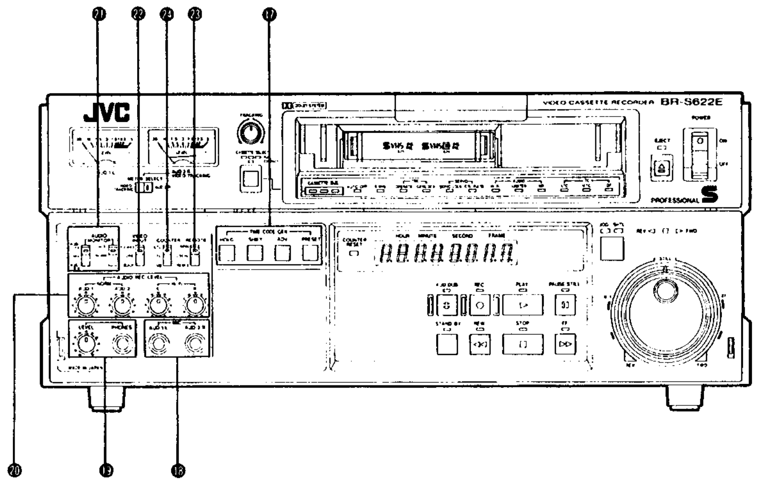

⑰ **Time Code setting buttons**
To preset time code/user bit data (with optional SA-R22E TC generator/reader installed).

HOLD button

This button is only effective when the SA-R22E's PRESET/REGEN switch is set to PRESET.

- Holds the current counter data; the leftmost digit will blink.

SHIFT button

- Shifts the blinking digit to the right. (You can also shift the blinking digit in either direction by holding down the SHIFT button and turning the JOG dial.)

ADV (ADVANCE) button

- Advances the value of the blinking digit. (You can also change the value in either direction by holding down the ADV button and turning the JOG dial.)

PRESET button

- Transfers the data set with the HOLD, SHIFT, and ADV buttons to the time code generator.
- Automatically cancels the Hold mode.

⑱ **MIC jacks (AUD-1/L, AUD-2/R)**

- For microphone connection. Input signal switches from line to microphone.

⑲ **PHONES jack/LEVEL control**

- Connect a set of headphones to monitor sound recording.
- Adjust output level with the LEVEL control.

⑳ **HI-FI L/R and NORM AUD-1/AUD-2 AUDIO REC LEVEL controls**

- To separately adjust recording levels for the Hi-Fi left/right-channel signals and the normal (linear) audio-1/2 signals.
- Optimum level is the point where the corresponding meter's peak deflection is "0".

㉑ **AUDIO MONITOR select switches**

- To select the audio output for the PHONES jack and the AUDIO MONITOR OUT connector.
- The Hi-Fi/NORM switch also switches the audio level meters between Hi-Fi and NORMAL.

Hi-Fi: To monitor the Hi-Fi audio signals.
NORM: To monitor the normal audio signals.
AUD-1/L: To monitor the normal audio-1 or Hi-Fi left-channel signal.
MIX: To monitor the AUD-1/L and AUD-2/R signals together.
AUD-2/R: To monitor the normal audio-2 signal or Hi-Fi right-channel signal.

㉒ **VIDEO INPUT select switch**

- To select an input video signal for recording.

Y/C443: To record the signal input to the Y/C443 connector.
LINE: To record the signal input to the VIDEO IN LINE connector.
BLACK: To record the internally-generated black burst signal on a blank tape in preparation for insert editing. If set to this position during menu setting, on-screen information is output from all output connectors, not only the MONITOR OUT connector.

㉓ **REMOTE select switch**

- To select between remote and local control of the recorder.

9-PIN: For remote control via the rear panel 9-pin connector.
LOCAL: For direct control with the recorder's function buttons.
REM-2: For remote control via the optional 45-pin or RS-232C interface.

㉔ **COUNTER select switch**

- To select the time counter display mode with the SA-R22E TC generator/reader installed. If this is not installed, CTL signals are displayed regardless of the switch setting.

CTL: CTL signals are displayed on the time counter.
TC: Time code signals are displayed on the time counter.
UB: User bits are displayed on the time counter.

FRONT SUB PANEL

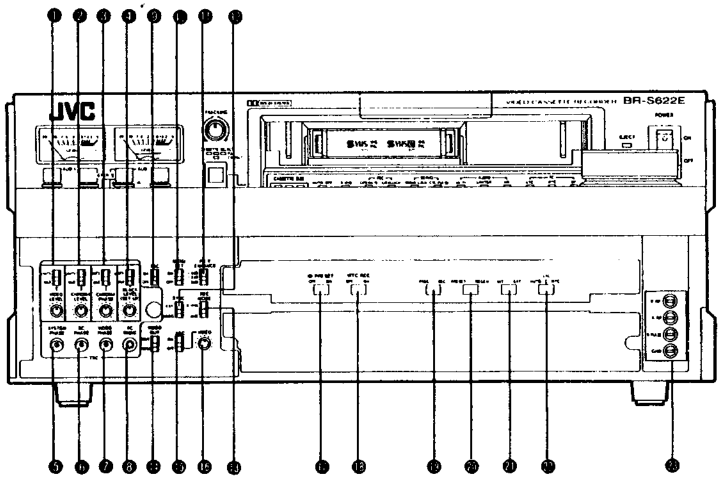

TBC CONTROLS

The controls in this section function when the optional SA-T22E TBC (time base corrector) is installed.

① **VIDEO LEVEL UNITY/VARIABLE select switch/level control**

UNITY: The output signal's video level is the same as the playback signal. Normally set to this position.

VARIABLE: Allows you to adjust the output signal's video level with the VIDEO LEVEL control. Adjustment is possible within ±3 dB.

② **CHROMA LEVEL UNITY/VARIABLE select switch/level control**

UNITY: The output signal's chroma level is the same as the playback signal. Normally set to this position.

VARIABLE: Allows you to adjust the output signal's chroma level with the CHROMA LEVEL control. Adjustment is possible within ±3 dB.

③ **CHROMA PHASE UNITY/VARIABLE select switch/level control**

UNITY: The output signal's chroma phase is the same as the playback signal.

VARIABLE: Allows you to adjust the output signal's chroma phase with the CHROMA PHASE control. Adjustment is possible within ±30°.

④ **BLACK LEVEL VARIABLE/UNITY select switch/level control**

UNITY: The output signal's setup level is the same as the playback signal.

VARIABLE: Allows you to adjust the output signal's setup level with the BLACK LEVEL (SET UP) control. Adjustment is possible within ±107 mV.

⑤ **SYSTEM PHASE control**

- Adjusts the output signal's horizontal phase with respect to that of the reference input signal. Adjustment is possible within a range of ±3 µsec.

⑥ **SC PHASE**

- Adjusts the output signal's subcarrier phase with respect to that of the reference input signal. Up to 15 rotations are possible with continuous variation over a range of ±180°.

⑦ **VIDEO PHASE control**

- Adjusts the output signal's video phase with respect to the playback signal's H sync. Up to 15 rotations are possible with continuous variation over a range of ±1.5 µsec.

⑧ **YC TIMING control**

- Adjusts the output signal's C signal delay time with reference to the Y signal. Adjustable within ±500 nsec.
- Normally set to "8".

⑨ **TBC ON/OFF switch.**

- Set to ON for TBC playback. (During TBC operation, the servo is locked to the reference signal supplied to the EXT REF connector even if the SYNC select switch is set to VIDEO.)
- Set to OFF to bypass TBC.

⑩ **MENU SET ON/OFF switch**

- SET to ON to activate the On-Screen Menu. The counter display will also switch to the Menu Set mode.
- Most basic system setup operations are performed using the Menu.

⑪ **PB Y ENHANCE switch**

- Enhances the luminance signal for a sharper playback picture.

+4 dB: Boosts luminance signal level by 4 dB at 2.5 MHz for maximum picture sharpness.

+2 dB: Boosts luminance signal level by 2 dB at 2.5 MHz for a sharper picture.

0 dB: No effect. The same result is obtained by setting the VIDEO OUT select switch ⑭ to EDIT.

⑫ **SYNC select switch**

EXT: The servo is synchronised with the external reference signal supplied to the EXT REF input.

VIDEO: The servo is synchronised with the input video signal.

⑬ **REC MODE select switch**

S-VHS: To record in the S-VHS mode. (Use S-VHS cassettes only)

VHS: To record in the VHS mode.

⑭ **VIDEO OUT select switch**

EDIT: Set to this position when using this VCR as a feeder or recorder in dubbing.

NORM: Normally set to this position.

⑮ **VIDEO AGC ON/OFF switch**

- Set to ON to activate the built-in VIDEO AGC circuit.
- Set to OFF to adjust the luminance video recording level manually.

⑯ **VIDEO control**

- Use to adjust video recording level, referring to the VIDEO/TRACKING meter. The centre click-stop is the standard position. The VIDEO AGC switch must be OFF to use this control.

TIME CODE GENERATOR/READER SETTING SWITCHES
(With SA-R22E TC generator/reader installed)

⑰ **ID PRESET ON/OFF switch**

ON: To record the ID code specifically preset for each VCR.

OFF: To use the user bits memory for standard procedures in the Preset mode.

⑱ **VITC REC ON/OFF switch**

ON: To record VITC time codes.

OFF: VITC time codes are not recorded.

NOTE:

This switch has no effect on LTC recording (enabled by setting menu item #206 to "01 – LTC").

⑲ **FREE/REC switch**

- This switch is effective only when the PRESET/REGEN switch is set to PRESET and the INT/EXT switch is set to INT.

FREE: The time code runs in real time, regardless of the video recorder's operating mode.

REC: The time code runs only during recording.

⑳ **PRESET/REGEN switch**

PRESET: To use the internal TC generator in the Preset mode (with the INT/EXT switch set to INT), or to use an external TC generator via the TIME CODE IN connector (with the INT/EXT switch set to EXT).

REGEN: To use the internal TC generator in sync with either the playback time codes (with the INT/EXT switch set to INT), or externally input time codes (with the INT/EXT switch set to EXT).

㉑ **INT/EXT switch**

INT: To use the internal TC generator.

EXT: To use an externally-connected LTC/VITC generator.

㉒ **AUTO/LTC/VITC switch**

- To select the TC reader mode. Select the mode according to the type of reference time code with which the internal TC generator is synchronised in the Regen mode.

AUTO: For tapes with matching VITC and LTC data. Counts time codes in VITC at tape speeds lower than normal, and in LTC at speeds higher than normal. Missing sections are interpolated with CTL counts.

LTC: For LTC-only tapes or when editing with LTC data. Counts time codes in CTL at tape speeds lower than normal and higher than 10 times normal, and in LTC at speeds higher than normal. Missing sections are interpolated with CTL counts.

VITC: For VITC-only tapes or when editing with VITC data. Counts time codes in VITC at tape speeds lower than 10 times normal, and in CTL at speeds higher than 10 times normal. Missing sections are interpolated with CTL counts.

㉓ **Test points**

V-RF test point

- Outputs the video head FM signal during playback.
- Can be used for detection of clogged or worn heads.

A-RF test point

- Outputs the Hi-Fi audio FM signal during playback.
- Can be used for detection of clogged or worn heads.

D-PULSE pin

- Connect to the external trigger terminal of an oscilloscope.

GND

- Connect to the ground terminal of an oscilloscope.

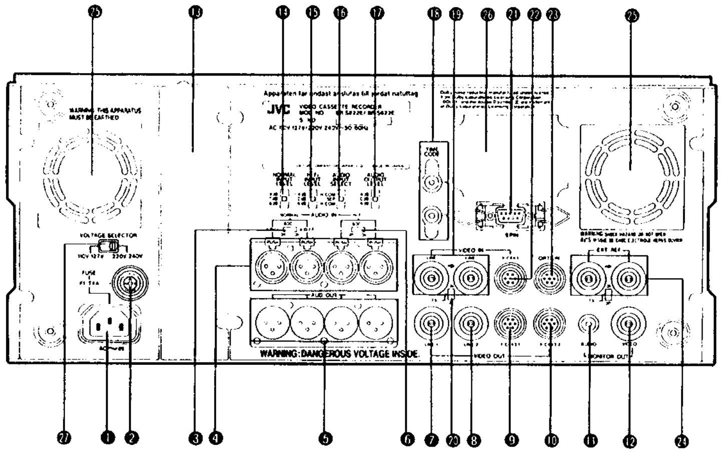

① **AC IN socket**
- Connect to 110 – 120 V or 220 – 240 V AC, 50/60 Hz power outlet.

② **Fuse holder**

③ **NORM AUDIO INPUT impedance select switch**
ON: 600 ohms.
OFF: 10 k-ohms. Normally set to this position.

④ **Audio input connectors**

AUDIO IN NORMAL:	Normal audio input connectors for Audio-1 and Audio-2.
AUDIO IN Hi-Fi:	Hi-Fi audio input connectors for Left and Right.

⑤ **Audio output connectors**

AUDIO OUT NORMAL:	Normal audio output connectors for Audio-1 and Audio-2.
AUDIO OUT Hi-Fi:	Hi-Fi audio output connectors for Left and Right.

⑥ **Hi-Fi AUDIO INPUT impedance select switch**
ON: 600 ohms.
OFF: 10 k-ohms. Normally set to this position.

⑦, ⑧ **VIDEO OUT LINE (1, 2) connectors**
- The composite video signal is output from these connectors.

⑨, ⑩ **VIDEO OUT Y/C443 (1, 2) connectors**
- The Y/C443 signal is output from these connectors.

⑪ **AUDIO MONITOR OUT connector**
- The audio signal selected with the AUDIO MONITOR select switches is available at this connector.

⑫ **VIDEO MONITOR OUT connector**
- The composite video output signal is available at this connector. On-screen information is also supplied.

⑬ **Expansion slot**
- For installation of optional interface (SA-K28E or SA-K27E).

⑭ **NORMAL INPUT LEVEL select switch**
- To select -6 dB, 0 dB, or +4 dB according to the level of the normal audio input signal. Both channels are switched simultaneously.

⑮ **HI-FI INPUT LEVEL select switch**
- To select -6 dB, 0 dB, or +4 dB according to the level of the Hi-Fi audio input signal. Both channels are switched simultaneously.

⑯ **AUDIO INPUT SELECT switch**

H COM:	"Hi-Fi Combined" recording. Set to this position to record audio signals input to the AUDIO IN Hi-Fi connectors on both the Hi-Fi and Normal audio tracks.
SEP:	"Separate" recording. Set to this position to record audio signals input to the AUDIO IN Hi-Fi and NORMAL connectors separately on the Hi-Fi and Normal audio tracks.
N COM:	"Normal Combined" recording. Set to this position to record audio signals input to the AUDIO IN NORMAL connectors on both the Hi-Fi and Normal audio tracks.

⑰ **AUDIO OUTPUT LEVEL select switch**
- To select -6 dB, 0 dB, or +4 dB according to the input level of connected audio equipment. All four audio channels are switched simultaneously.

⑱ **TIME CODE IN/OUT connectors**
Set menu item #206 to "01 – LTC" to record LTC time codes on the normal audio-2 track.
- Connect a time code generator to the IN connector for external time code recording.
- Connect a time code reader to the OUT connector for external time code reading.

⑲ **VIDEO IN LINE connectors**
- The composite video signal is input to the left connector.
- To output the loop-through signal to another unit, set the 75-ohm terminating switch to OFF.

⑳ **75-Ohm terminating switch**
ON: The loop-through signal is terminated at the BR-S622E.
OFF: The loop-through signal is output to another unit.

㉑ **9-PIN connector**
- Connect to an RS-422 9-pin serial remote control unit or to the RS-422 9-pin connector of a recorder for swap editing.

㉒ **VIDEO IN Y/C443 connector**
- The Y/C443 signal is input to this connector.

㉓ **OPTION connector**
- Delivers the Y/C 686/Y/C 924 signal (with optional SA-E92E Output board installed) to the DUB IN connector of 3/4" U-VCR machines.

㉔ **EXT REF connectors with 75-ohm terminating switch**
- Supply the reference signal (either black burst signal or composite video) to the left connector and set the 75-ohm terminating switch to ON.
- To output a loop-through signal to another unit, set the 75-ohm terminating switch to OFF.

NOTE:
- When using the SA-T22E, do not use a black-and-white signal or sync signal without burst as the reference signal, otherwise the intended synchronisation will not be obtained.

㉕ **Fans**

㉖ **Expansion slot**
For installation of COMPONENT OUT connector board when optional SA-T22E TBC is installed.
- Y/R-Y/B-Y output connectors: MII or Betacam component signal is output.
- TBC remote terminal: Connect a 15-pin remote controller for TBC operation.

㉗ **VOLTAGE SELECTOR**
- Select voltage according to your local power supply.
(Be sure the POWER is off when setting the voltage.)

AUDIO DUBBING

To simplify insertion of an additional or new soundtrack (such as narration or music) on a previously-recorded tape, the BR-S622E is equipped with an audio dubbing function. Microphone or other external audio input can be recorded directly on the normal audio-2 track.

PREPARATION

- Connect a microphone to the AUD-2/R MIC connector or connect an audio source to the rear panel NORMAL AUDIO IN AUD-2/R connector.
- Load a cassette.
- Set the AUDIO MONITOR select switches to NORM and MIX or AUD-2/R.
- Adjust the audio recording level as required with the AUD-2 recording level control.
- If menu item #206 is set to "01 – LTC", LTC can be inserted.

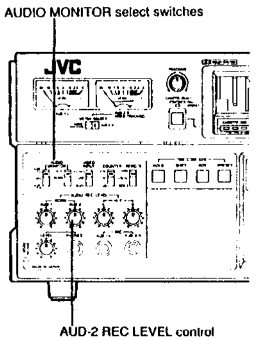

PROCEDURE

1. Search for the audio dubbing IN point.
   - Use the Jog/Shuttle controls to locate the IN point.
2. Engage the Still mode at the IN point.
3. Press AUD DUB and PLAY together to start audio dubbing.
   - The AUD DUB and PLAY indicators will light.
4. Press PAUSE/STILL to temporarily stop audio dubbing.
5. Press PLAY to re-start audio dubbing.
6. Press STOP to end audio dubbing.

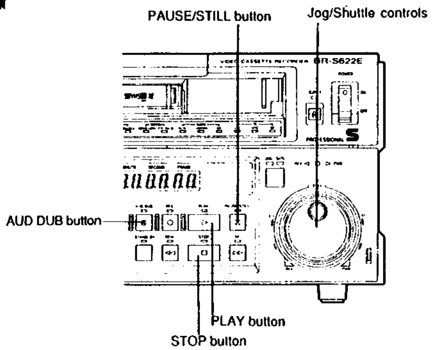

MENU SETTINGS

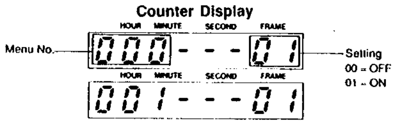

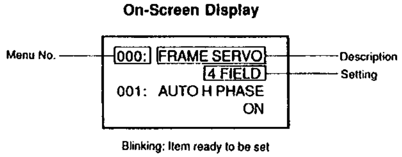

NOTE:
For items with more setting variations, 02, 03 ... are displayed.
In such cases, 00/01 does not mean OFF/ON.

(Initial settings are in brackets.)

Menu No.		On-Screen Description	Settings		Explanation
			Counter	On-Screen	
SERVO	000	FRAME SERVO	00 [01] 02	OFF [4 FIELD] 2 FIELD	OFF: To defeat Frame Servo. When random-interlaced or low-S/N video signals are used, set to OFF. 4 FIELD: To use Colour Frame Servo when editing in colour frame servo mode. 2 FIELD: To use Frame Servo.
	001	AUTO H PHASE	00 [01]	OFF [ON]	OFF: To defeat Auto H-Phase Lock. Set to OFF for animation or CG recording. ON: To use Auto H-Phase Lock. Normally set to ON.
VIDEO	100	SWITCHING POINT *1	[00] 01 02	[REC6.5H, PB4.5H] REC6.5H, PB5.5H REC2.25H, PB1.25H	Selects head switching point. REC6.5H, PB4.5H: To position head switching point 6.5H ahead of V sync in recording, and to shift it 2H in playback (1H lower than normal). Normally use this setting. REC6.5H, PB5.5H: To position head switching point 6.5H ahead of V sync in recording, and to shift it 1H in playback. REC2.25H, PB1.25H: To position head switching point 2.25H ahead of V sync in recording, and to shift it 1H in playback. Use this setting when you want a lower switching point for closed-circuit systems.
	101	S-VHS REC. EQ.	00 [01] 02 03	TAPE TYPE-1 [TAPE TYPE-2] TAPE TYPE-3 TAPE TYPE-4	Selects video frequency response according to the characteristics of the tape used. TAPE TYPE-1: Do not use this setting. TAPE TYPE-2: Professional-S tape or other double-coated tapes. TAPE TYPE-3: S-VHS master tape. TAPE TYPE-4: Do not use this setting.
	102	U-VCR Y/C MODE	[00] 01	[CONV.] HB/SP	Selects the mode of the signal output via rear panel OPTION (Y-686/924) connector. (Effective with SA-E92E board) CONV.: To output Y-686/924 dubbing signal to conventional 3/4" U-VCR machines. HB/SP: To output Y-686/924 dubbing signal to 3/4" U-VCR SP or Hi-Band machines.
	103	WIDE ASPECT ID REC.	[00] 01 02	[AUTO] WIDE NORM.	Selects recording in wide aspect format (16:9 aspect ratio) or normal format (4:3 aspect ratio). AUTO: Automatically detects wide aspect ID of input signal (Y/C input only) and records in wide aspect format. WIDE: Records in wide aspect format regardless of the format of input signal. When recording wide-aspect pictures via composite input, use this setting. NORM.: Records in normal aspect format regardless of the format of input signal.

Menu No.		On-Screen Description	Settings		Explanation
			Counter	On-Screen	
VIDEO	104	COMPONENT OUT LEVEL	[00] 01	[LOW] HIGH	Selects the level of component signals output via rear panel Y/R-Y/B-Y connectors. (Effective with SA-T22E) LOW: To output component signals to MII machines. HIGH: To output component signals to Betacam machines.
AUDIO	200	Hi-Fi AUDIO REC.	00 [01]	OFF [ON]	OFF: To defeat Hi-Fi audio recording. ON: To record Hi-Fi audio.
	201	NORM. AUDIO DOLBY NR	00 [01]	OFF [ON]	OFF: To defeat Dolby NR circuit for normal audio. ON: To activate Dolby NR circuit for normal audio.
	202	AUDIO LIMITER	00 [01]	OFF [ON]	OFF: To defeat audio limiter for normal audio tracks. ON: To activate audio limiter for normal audio tracks to avoid over-level recording. (Audio recording level adjustment is possible with limiter ON.)
	203	AUDIO OUT	[00] 01 02	[SEP.] Hi-Fi NORM	Selects output signals via rear panel AUDIO OUT connectors. SEP.: To output as labelled: normal audio from NORMAL AUD-1/AUD-2, Hi-Fi audio from Hi-Fi L/R. Hi-Fi: To output Hi-Fi audio from all connectors: NORMAL AUD-1 outputs Hi-Fi left-channel signal and NORMAL AUD-2 outputs Hi-Fi right-channel signal. NORM: To output normal audio from all connectors: Hi-Fi L outputs normal audio-1 signal and Hi-Fi R outputs normal audio-2 signal.
	204	Hi-Fi OUT AT SEARCH	[00] 01	[MUTE] NORM	Selects output signals via rear panel Hi-Fi AUDIO OUT connectors during search. MUTE: To output muted Hi-Fi audio. NORM.: To output normal audio.
	205	AUD-1 REC.	[00] 01	[AUD-1] AUD-1/2 MIX	Selects audio signals to be recorded on the normal audio-1 track. AUD-1: Audio signals input to AUD-1 are recorded. AUD-1/2 MIX: Mixed audio signals input to AUD-1 and AUD-2 are recorded. (Levels are controlled independently with the corresponding control.) Nothing is recorded on the normal audio-2 track unless menu item #206 is set to "01 – LTC".
	206	AUD-2/LTC *2	[00] 01	[AUD-2] LTC	Selects signals to be recorded on the normal audio-2 track. AUD-2: Audio signals input to AUD-2 are recorded. LTC: LTC signal is recorded.
SYSTEM	300	DIRECT EJECT	00 [01]	DISABLE [ENABLE]	DISABLE: EJECT command is accepted only from Stop mode. ENABLE: EJECT command is accepted from any mode.
	301	DIRECT SEARCH	00 [01]	DISABLE [ENABLE]	DISABLE: Jog/Shuttle dials do not function unless JOG/SHTL button is pressed first. ENABLE: Jog/Shuttle dials function directly from Stop, Play, Still, FF and REW modes.
	302	AUTO REC. PREROLL	00 [01]	DISABLE [ENABLE]	DISABLE: Enters Record-Pause mode without preroll. Picture will be distorted at record-start point. ENABLE: Enters Record-Pause mode with preroll of about 3 seconds.
	303	WARNING INHIBIT	[00] 01	[OFF] ON	OFF: Malfunctions are detected for warning indications. Normally keep set to this position. ON: Detection of malfunctions is inhibited. No warning indication is available.
	304	RECORDING INHIBIT	[00] 01	[OFF] ON	OFF: Recording is possible with cassettes with safety tab in place. ON: Recording is inhibited regardless of the presence of safety tab. Use this position if the VCR is used only as a player.
	305	REPEAT REC.	[00] 01	[DISABLE] ENABLE	This setting is for manufacturer adjustment purposes only. Always keep set to DISABLE.

Menu No.		On-Screen Description	Settings		Explanation
			Counter	On-Screen	
SYSTEM	306	LONG PAUSE	00 [01]	DISABLE [ENABLE]	DISABLE: To defeat Long Pause function. ENABLE: To use Long Pause function in Standby-On, Still and Record-Pause modes. (Long Pause parameters are selected with menu items #307, #308 and #309.)
	307	LONG PAUSE TIME	00 01 02 03 04 05 06 [07]	1 SEC 10 SEC 30 SEC 1 MIN 2 MIN 3 MIN 4 MIN [5 MIN]	With menu item #306 set to ENABLE, selects the length of time before normal Pause (Standby-On, Still and Record-Pause) mode changes to Long Pause.
	308	LONG PAUSE (STILL)	00 01 [02]	STANDBY-OFF T. RELEASE [STEP FWD]	Selects the contents of Long Pause mode. (After the time set with menu item #307 expires in Still or Record-Pause mode, the VCR operates as specified.) STANDBY-OFF: Enters Standby-Off mode. T. RELEASE: Tension arm is released for tape protection. Still pictures continue to be available. STEP FWD: Tape advances in slow-motion for about 2 seconds (about 2 frames). This action is repeated 5 times at the time intervals set with menu item #307. The VCR enters the Standby-Off mode after the final interval.
	309	LONG PAUSE (STOP)	[00] 01 02	[STANDBY-OFF] T. RELEASE STEP FWD	Selects the contents of Long Pause mode. (After the time set with menu item #307 expires in the Standby-On mode, the VCR operates as specified.) STANDBY-OFF: Enters Standby-Off mode. T. RELEASE: Tension arm is released for tape protection. STEP FWD: Tape advances in slow-motion for about 2 seconds (about 2 frames). This action is repeated 5 times at the time intervals set with menu item #307. The VCR enters the Standby-Off mode after the final interval.
	310	STANDBY-OFF MODE	00 [01] 02	DRUM ON [DRUM OFF] UNLOAD	Selects the status of Standby-Off mode. DRUM ON: Head drum continues to rotate with tape loaded. DRUM OFF: Head drum stops rotating with tape loaded. UNLOAD: Head drum stops rotating and tape unloads.
	311	MODE AT TAPE BEGIN	[00] 01	[SHORT-FF] PLAY	Selects the mode entered when the beginning of the tape is detected. SHORT-FF: Fast-forwards the leader section and enters Standby-On mode. PLAY: Enters Play mode.
	312	MODE AT TAPE END	[00] 01	[SHORT-REW] REW	Selects the mode entered when the end of the tape is detected. SHORT-REW: Rewinds the leader section and enters Standby-On mode. REW: Rewinds to the beginning of tape and enters Standby-On or Play mode depending on the setting of menu item #311.
	313	PB-PB/EE	00 [01]	PB/EE [PB]	Selects output signal in the mode specified with menu item #314. PB/EE: Outputs EE signal. PB: Outputs playback signal.
	314	PB/EE MODE	[00] 01	[STOP /FF/REW] STOP	Selects the mode in which EE signal is output. STOP /FF/REW: EE signal is output in Stop, FF and REW modes. STOP : EE signal is not output in FF and REW modes.
	315	LOCAL FUNCTION	[00] 01 02 03	[STOP ,EJECT] STP,EJ,PLY,FF, RW,STL ALL ENABLE ALL DISABLE	Selects functions that can be locally operated when front panel REMOTE switch is set to 9PIN or REM-2.

Menu No.		On-Screen Description	Settings		Explanation
			Counter	On-Screen	
SYSTEM	316	9PIN CMD FUNCTION	[00] 01	[ALL DISABLE] STOP ,EJECT	Selects 9-pin remote control commands that are acceptable when front panel REMOTE switch is set to LOCAL. ALL DISABLE: Accepts no command from 9-pin remote control. STOP ,EJECT: Accepts STOP and EJECT commands only. (Note: With some remote controls, no command is accepted.)
	317	9PIN DEVICE TYPE ID	[00] 01 02 03	[JVC SVHS-1] JVC SVHS-2 OTHER TYPE-1 OTHER TYPE-2	Selects device type ID returned from VCR to 9-pin remote control in response to its request. JVC SVHS-1: Use this setting with BR-S622E/BR-S822E. JVC SVHS-2: Use this setting if SA-F911E is included in the system. OTHER TYPE-1/OTHER TYPE-2: Consult a JVC dealer.
	318	TC DATA W/O TC BOARD	[00] 01	[TC MISSING] CTL DATA	Selects VCR's response to 9-pin remote control when remote control requests time code data when TC board is not installed. TC MISSING: VCR returns code meaning TC MISSING. CTL DATA: VCR returns substitute CTL data.
	319	TAPE MAX SPEED	[00] 01 02	[X100] X32 X16	Selects maximum tape speed (full-size cassette only). (FF and REW speeds also correspond to this setting. In the 100x mode, the EE signal is output. In the 32x and 16x search modes, the playback signal is output. The CTL signal is output in the 16x search mode using the RM-86U 45-pin remote control.)
	320	PREROLL TIME	00 : [07] : 15	0 SEC : [7 SEC] : 15 SEC	Selects preroll time in one-second steps from 0 to 15 seconds.
	321	TIME REF. FOR PREROLL	00 [01]	CTL [TC]	Selects time count reference for preroll in TC operation. CTL: Refers to CTL counts. Preroll is possible even when time codes are missing. TC : Refers to time codes.
	322	IN POINT AUTO ENTRY	00 [01]	NOT ENTERED [ENTERED]	Activates or defeats automatic IN point entry function. NOT ENTERED: IN point is not entered automatically by pressing PREROLL button. ENTERED: IN point is entered automatically by pressing PREROLL button if no IN point has been previously entered.
	323	MODE AFTER PREROLL	[00] 01	[STOP] STILL	STOP : Enters Stop mode after preroll is completed. STILL : Enters Still mode after preroll is completed.
	324	EDIT FIELD	[00] 01	[1st] 2nd	1st: Starts recording on the first field and ends on the second field. 2nd: Starts recording on the second field and ends on the first field. Use this setting when inserting two pictures in one frame for animation.
	325	CTL COUNTER MODE	[00] 01	[±9H] 24H	±9H: Counter shows from –9 to +9 hours in CTL mode. 24H: Counter shows from 0 to 24 hours in CTL mode.
	326	CTL COUNTER MEMORY	[00] 01	[OFF] ON	OFF: No counter memory function is available. ON: Enters Stop mode at CTL counter reading of zero in FF and REW modes.
	327	CTL CLEAR AT EJECT	00 [01]	DISABLE [ENABLE]	DISABLE: CTL counter is not reset when cassette is ejected. ENABLE: CTL counter is reset when cassette is ejected.

Menu No.		On-Screen Description	Settings		Explanation
			Counter	On-Screen	
SYSTEM	332	CASSETTE SEL. INHIBIT	[00] 01	[OFF] ON	OFF: Cassette size selection is possible with the CASSETTE SELECT button on the front panel. ON: Cassette size selection is inhibited.
	333	CF SERVO LOCK REPLY	00 [01]	DISABLE [ENABLE]	Selects information to deliver to 9-pin remote. DISABLE: Colour frame servo lock cannot be engaged. ENABLE: Colour frame is locked to 4-field colour framing mode.
	334	CF RE-LOCK AT PLAY	[00] 01	[DISABLE] ENABLE	Activates or defeats colour frame re-lock function when colour frame lock is disengaged in Play mode.
TIME CODE	400	VITC POSITION-1	00 : [12] : 15	7LINE : [19LINE] : 22LINE	Selects the horizontal scanning line on which VITC data is stored. Selectable from line 7 to line 22 in the vertical blanking interval. ● Do not select line 11 in S-VHS recording as this is reserved for AUTO EQ. ● When using the SA-T22E TBC board, set above line 9.
	401	VITC POSITION-2	00 : [14] : 15	7LINE : [21LINE] : 22LINE	Selects the horizontal scanning line on which VITC data is stored. Selectable from line 7 to line 22 in the vertical blanking interval. (Two lines per field are used to store VITC data.) ● Do not select line 11 in S-VHS recording as this is reserved for AUTO EQ signal. ● When using the SA-T22E TBC board, set above line 9.
	403	TCG REGEN MODE	[00] 01 02	[TC & UB] TC UB	Selects code data to be regenerated in Internal Regen mode (with TC board's INT/EXT switch set to INT and PRESET /REGEN switch set to REGEN.) TC & UB: Records both time code and user bit data in Regen mode. TC: Records time code data in Regen mode and user bit data in Preset mode. UB: Records user bit data in Regen mode and time code data in Preset mode.
	404	TC SOURCE AT REGEN	[00] 01	[LTC] VITC	Selects the type of reference time code in the Regen mode. LTC : Reference code is LTC. VITC : Reference code is VITC.
	405	LTC OUT (REGEN)	[00] 01	[OFF TAPE] TCG	Selects output signal from TIME CODE OUT connector while playback is in progress in Internal Regen mode. OFF TAPE: Outputs time code signal picked up from tape. TCG: Outputs time code signal regenerated by TC generator.
	406	U-BIT BINARY GROUP	[00] 01 02 03	[NOT SPECIFIED] ISO CHAR. UNASSIGNED-1 UNASSIGNED-2	Selects character set configuration to use TC generator's user bits. NOT SPECIFIED: Character set configuration is not specified. ISO CHAR.: 8-Bit character set conforming to ISO 646 and ISO 2022 (with binary group flags at bit counts 43 and 59 in LTC; at 55 and 75 in VITC.) UNASSIGNED-1: Undefined. UNASSIGNED-2: Undefined.
	407	PHASE CORRECTION BIT	00 [01]	OFF [ON]	Selects recording of LTC phase correction bit (parity bit for bit error check). OFF : Not recorded. (Use this setting if 10s readout is not correct with external TC reader connected.) ON: Recorded.
	408	VITC LINE	[00] 01	[VITC MIX] CLEAN ONLY	Selects whether lines set with menu items #400 and #401 are to be cleaned in recording. VITC MIX: VITC is recorded after lines are cleaned. CLEAN ONLY: Lines are cleaned.
	409	EXT REGEN TC	[00] 01	[LTC] VITC	Selects the type of externally input reference time code in External Regen mode. LTC: To use LTC via TIME CODE IN connector. VITC: To use VITC via VIDEO IN connector.

Menu No.		On-Screen Description	Settings		Explanation
			Counter	On-Screen	
ON-SCREEN	500	ON-SCREEN DISPLAY	00 [01]	OFF [ON]	OFF: No data is displayed on-screen. ON: Data is displayed on-screen.
	501	CHAR. H-POSITION	[00] : 08	[00] : 8	Adjusts on-screen VCR data display position in the horizontal direction. 0 : VCR data is displayed at the rightmost position. 1 - 8: Display position shifts to the left with increasing numbers.
	502	CHAR. V-POSITION	[00] : 09	[00] : 9	Adjusts on-screen VCR data display position in the vertical direction. 0 : VCR data is displayed at the bottom of screen. 1 - 9: Display position shifts up with increasing numbers.
	503	CHAR. BACKGROUND	[00] 01 02	[BORDER] SEMI. BLACK	BORDER: Displays bordered characters. SEMI.: Displays semi-transparent characters. BLACK : Displays characters on black background.
	504	INFORMATION	00 [01]	TIME [TIME & MODE]	Selects available on-screen information. TIME: Time counter data. TIME & MODE: Time counter data, operation mode and Jog/Shuttle tape speed.
TBC	600	TBC FREEZE	[00] 01	[DISABLE] ENABLE	Selects the mode of still pictures in TBC operation. DISABLE: Outputs normal still pictures. ENABLE: Outputs 'freeze' still pictures from TBC's field memory when PAUSE/STILL button is pressed while in Play mode.
	601	V BLANK MASK	[00] 01	[OFF] ON	Activates or defeats vertical blanking interval masking function in TBC operation. OFF: No masking function. ON: Masks the entire vertical blanking interval in playback to erase VITC. VITC readout is impossible with this setting.

*1: When you set this item to "02 – REC 2.25H/PB 1.25H" in recording, be sure to set it to this position when playing back the tape in the TBC mode.
*2: When playing back a tape with no LTC recorded on the normal audio-2 track, set this item to "00 – AUD-2".

SPECIFICATIONS

GENERAL

Format : VHS/S-VHS Europe standard
Power consumption : 90 W
Power requirment : AC 110 – 127 V/220 – 240 V~, 50/60 Hz
Dimensions : 42.9 (W) X 18.8 (H) X 56.5 (D) cm
Weight : 23 kg
Operating temperature : 5°C to 40°C
Storage temperature : –20°C to 60°C
Tape speed : 23.39 mm/sec
Recording & Playback time : Max. 180 min. with JVC SE-180/E-180
Fast forward/ Rewind time : Less than 2.5 min. for 180 min. tape

VIDEO

Recording and playback : Rotary two-head helical scanning system
Luminance : FM recording
Colour signal : Phase shift, converted sub-carrier direct recording
Video signal system : PAL-type colour signal/PAL-type Y/C signal
Input
Line : 1.0 Vp-p, 75 ohms, unbalanced
Y/C 443 : Y: 1.0 Vp-p, 75 ohms, unbalanced
C: 0.3 Vp-p, 75 ohms, unbalanced (Burst)
Output
Line : 1.0 Vp-p, 75 ohms, unbalanced
Y/C 443 : Y: 1.0 Vp-p, 75 ohms, unbalanced
C: 0.3 Vp-p, 75 ohms, unbalanced (Burst)
Signal-to-noise ratio : More than 46 dB (S-VHS)
More than 45 dB (VHS)
Horizontal resolution : More than 400 lines (S-VHS)
More than 250 lines (VHS)
Reference video input : 0.3 to 1.0 Vp-p, 75 ohms, unbalanced (with loop-through, with the SA-T22E)
External sync input : 0.3 to 4.0 Vp-p, 75 ohms, unbalanced (with one loop-through, without the SA-T22E)

AUDIO

Input
Line : –6/0/+4 dBs, 10 k-ohms/600 ohms, balanced (Hi-Fi/Normal)
Mic : –67 dBs, 10 k-ohms, unbalanced
Output
Line : –6/0/+4 dBs, Low impedance, balanced (Hi-Fi/Normal)
Monitor : –6 dBs, Low impedance, unbalanced
Phones : ∞ to –17 dBs, 8 ohms
Signal-to-noise ratio : More than 43 dB (NR-off, Normal at 3% distortion)
Dynamic range : More than 87 dB (Hi-Fi)
Frequency response : 20 to 20,000 Hz (Hi-Fi)
40 to 12,000 Hz (Normal)
Wow & flutter : Less than 0.005% WRMS (Hi-Fi)
Less than 0.3% RMS (Normal)

TIME CODE

Input : 0 dB ± 6 dBs, 10 k-ohms, unbalanced
Output : 0 dB ± 3 dBs, Low impedance, unbalanced

CONNECTORS

Video
Line input : BNC-type connector
Line output : BNC-type connectors
Y/C 443 input/output : 7-pin connectors
Monitor : BNC-type connector
Audio
Hi-Fi input/ output : XLR connectors
Normal input/ output : XLR connectors
Monitor : RCA connector
Remote control : 9-pin connector

ACCESSORIES

Provided accessories : 7-pin cable

Design and specifications subject to change without notice.

SECTION 1
GENERAL DESCRIPTION AND DISASSEMBLY

1.1 REMOVAL OF EXTERNAL COVERS

1.1.1 Top cover

1. Remove two screws Ⓐ and lift the top cover by the rear to remove it upward.

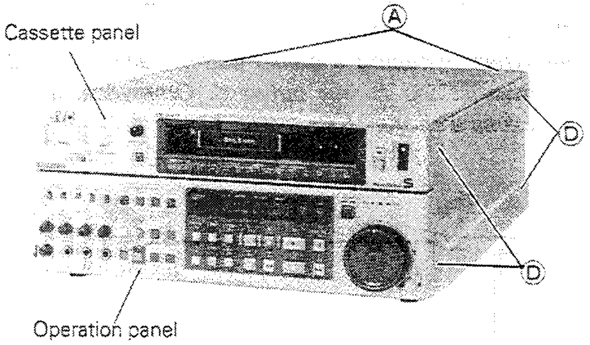

Fig. 1-1-1

1.1.2 Cassette panel (Upper part of the front panel)

1. Remove the top cover.
2. Remove three screws Ⓑ and lift up the cassette panel to the front side while taking it off.
3. For removing the cassette panel entirely from the main body, disconnect the relay connector and connectors connected with the operation panel.

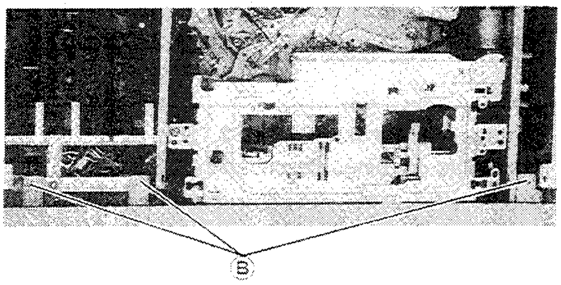

Fig. 1-1-2

1.1.3 Operation panel (Lower part of the front panel)

1. Remove the top cover and the cassette panel.
2. Remove two screws Ⓒ from the both sides of the operation panel.
3. Draw the connector out of the main body while disconnecting it.
4. Draw the operation panel frontwoard while removing it.

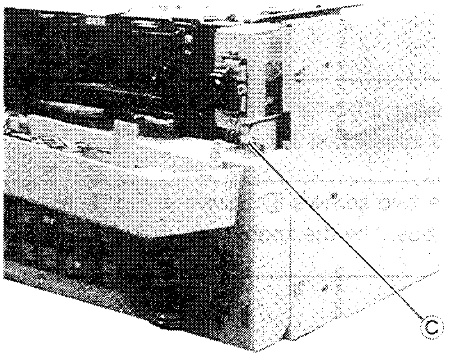

Fig. 1-1-3

1.1.4 Side covers

1. Remove the top cover and the cassette panel.
2. Remove four screws Ⓓ (see Fig. 1-1-1) and take off a side cover.
3. Remove the other side cover in the same manner.

1.1.5 Bottom cover

1. Remove the left side cover.
2. Raise the set so as to stand on its rear panel.
3. Remove five screws Ⓔ and take off the bottom cover.

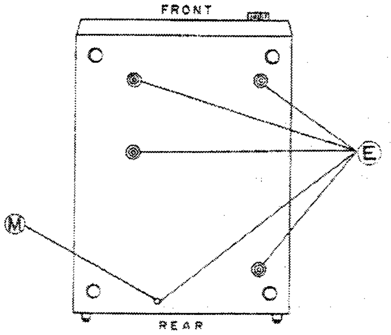

Fig. 1-1-4

1.1.6 Rear panel

Remove screws retaining the side cover in the rear panel side.

– Rear panel (A) –

1. Remove four screws Ⓕ and two feet Ⓖ.
2. Remove the rear panel (A).

– Rear panel (B) –

3. Remove two screws Ⓘ and two feet Ⓙ.
4. Remove the rear panel (B).

– Rear panel (C) –

5. Remove two screws Ⓛ to remove the rear panel (C).

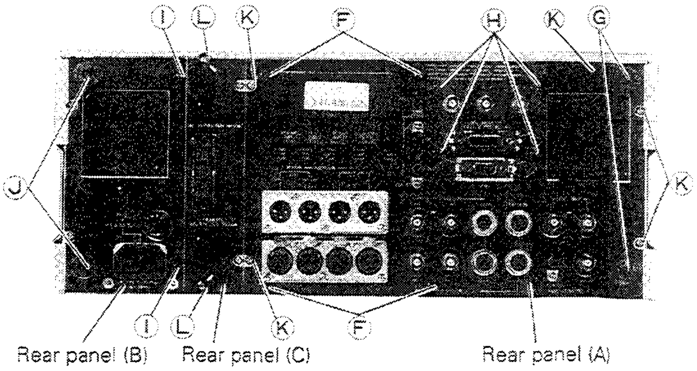

Fig. 1-1-5 (45-PIN board is optional.)

1.1.7 Rear bracket

1. Remove two screws retaining the left side cover in the rear panel side.
2. Remove five screws Ⓚ (see Fig. 1-1-5) and a screw Ⓜ (see Fig. 1-1-4) to remove the rear bracket.

1.2 REMOVAL OF MAIN BOARDS

Note: • *When removing/installing any P. C. board, cut off the power supply beforehand.*
• *Make sure to reinstall any P. C. board as it was originally assembled.*

Group	Board Name	Extension Board	Removing and Resetting Manner
A	05 FUSE 16 R/P ADJUST 17 Y COMB 19 OUTPUT 22 AUDIO-2 23 AUDIO-3 41 AVM/OS 61 TBC-2 (Optional) 62 TBC-3 (Optional) 66 U-VCR Y/C OUT (Optional)	PGJ05044	1) Remove the top cover. 2) After removing the board holder, pull up the ejector of the board for removal. Note: *When installing a shield plate, place it with the instructions facing outward. Otherwise, it may cause a shortcircuit.* 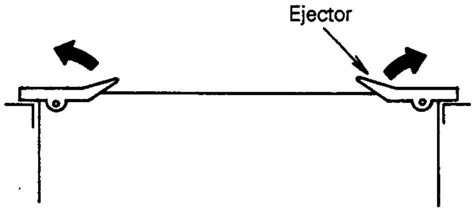
	10 R/P Y 11 R/P COLOR 1 12 R/P COLOR 2 60 TBC-1 (Optional)	PGJ05043	
B	40 SYSCON 65 TC G/R (Optional)	PGJ05043 x2 PGJ05045 (TC G/R)	1) Open the operation panel. 2) Remove two lock screws, and draw out the SYSCON board to remove. 3) The TC G/R board is inserted into the SYSCON board.
C	01 MOTHER 1 02 MOTHER 2 30 D/C SERVO 31 M. CTL/R. SERVO	—	1) Raise the set so as to stand on the rear panel, and remove the bottom cover. (Refer to Sec. 1.1.5) 2) Proceed to do things described in "1.2.1 Group C".
D	24 AUDIO-4 25 AUDIO-5 71 REAR-1 72 REAR-2 73 REAR-3 74 REAR-4 (Optional)	—	1) Remove the rear bracket (see 1.1.7). 2) Proceed to do things described in "1.2.2 Group D".
E	20 FMA PRE 21 AUDIO-1	—	1) Take off the top cover. For the AUDIO-1 board, remove the right side cover. (See Fig. 1-2-1.) 2) Release the hinge to unlatch the board and disconnect connectors while removing the board.
F	42 OPERATION CPU 43 OPERATION KEY-1 44 OPERATION KEY-2 26 AUDIO-6 (Incl. 27 JACK, 28 VR)	—	1) Open the operation panel. 2) Proceed to do things described in "1.2.3 Group F".
G	15 PRE/REC	—	1) Refer to the upper drum replacing procedure (1 through 6) in the subsection 2.3.4.
H	67 45 PIN I/F (Optional) 55 RS-232C I/F (Optional)	PGJ05035	1) Remove two screws Ⓛ shown in Fig. 1-1-5, and draw out the board by the knob.

Table 1-2-1

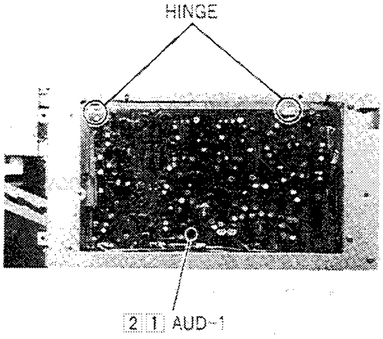
HINGE
21 AUD-1

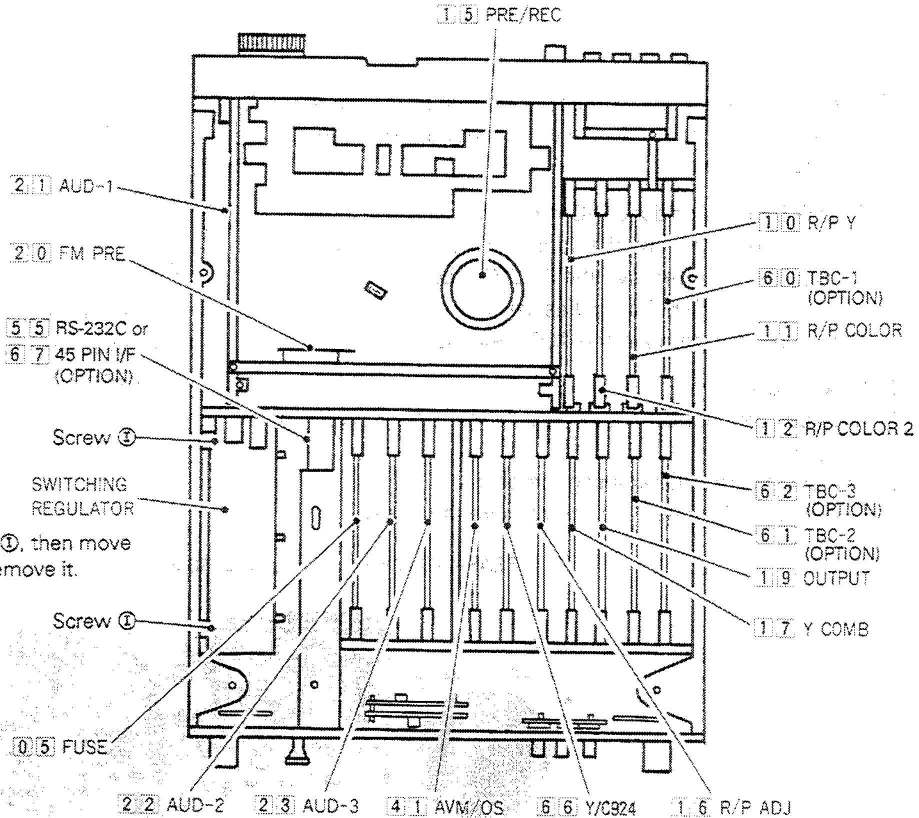
15 PRE/REC
21 AUD-1
20 FM PRE
55 RS-232C or
67 45 PIN I/F
(OPTION)
Screw ①
SWITCHING
REGULATOR
Screw ①
05 FUSE
22 AUD-2
23 AUD-3
41 AVM/OS
66 Y/C924
(OPTION)
16 R/P ADJ
10 R/P Y
60 TBC-1
(OPTION)
11 R/P COLOR
12 R/P COLOR 2
62 TBC-3
(OPTION)
61 TBC-2
(OPTION)
19 OUTPUT
17 Y COMB

Remove two screws ①, then move the set rearward to remove it.

Fig. 1-2-1 (Board holders are removed.)

1.2.1 Group C

1. D/C SERVO board and M. CTL/R. SERVO board

1) With the operation panel opened, stand the set on its rear.
2) Remove two screws Ⓐ and tilt the board frontward.
3) Remove four screws Ⓑ retaining the boards and brackets, and disconnect connectors. Then, the D/C SERVO board and the M. CTL/R. SERVO board can be removed.

2. MOTHER 1 board and MOTHER 2 board

1) Remove all boards belonging to the Group A.
2) Remove twelve screws Ⓒ and connectors to remove the boards.

Note: The MOTHER 1 and the MOTHER 2 boards are connected with a flat cable.

65 TC G/R board is optional.

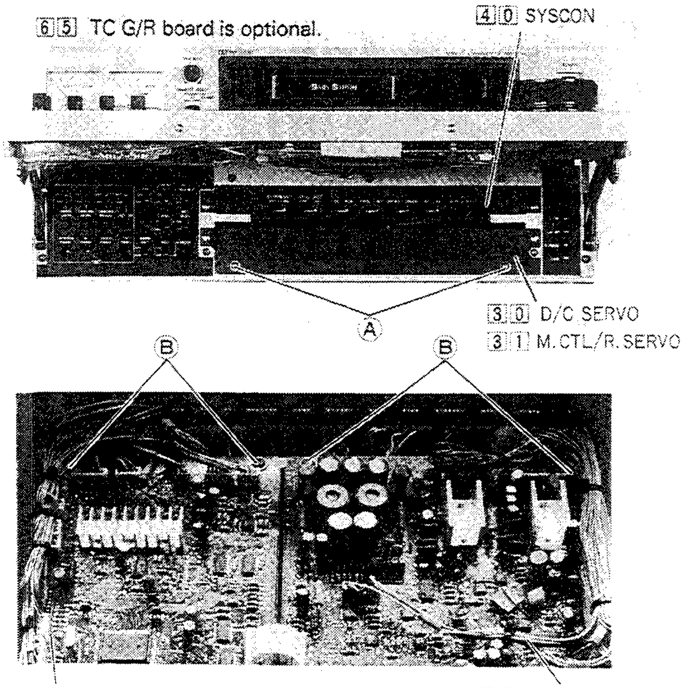
40 SYSCON
Ⓐ
30 D/C SERVO
31 M.CTL/R.SERVO
Ⓑ
Ⓑ
30 D/C SERVO
31 M.CTL/R.SERVO

Fig. 1-2-2

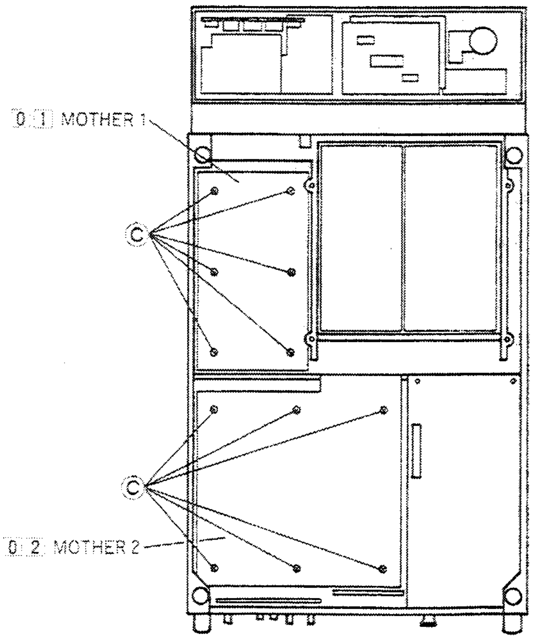
01 MOTHER 1
Ⓒ
Ⓒ
02 MOTHER 2

Fig. 1-2-3

1.2.2 Group D

Note: In the BR-S522E, soldering points of connectors are less in number since it is equipped with no input terminal.

1. AUDIO-5 board and AUDIO-4 board

1) Remove spacers from the four corners and disconnect connectors. Then remove the AUDIO-5 board.
2) After the AUDIO-5 board has been removed, remove three screws to remove the AUDIO-4 board.

2. REAR-1 board

1) Unsolder connectors (7 points for BNC, 1 for RCA and 4 for Y/C).
2) Remove a screw Ⓕ retaining the board.
3) Disconnect all connectors and remove the board.

3. REAR-2 board

1) Unsolder the TIME CODE OUT and AUDIO OUT connectors.
2) Unsolder the 9-pin connector and remove the board.

4. REAR-3 board

1) Unsolder the XLR connector at 8 points and remove the board.

5. REAR-4 board (Optional)

1) Remove four screws Ⓗ shown in Fig. 1-1-5 and disconnect connectors to remove the board.

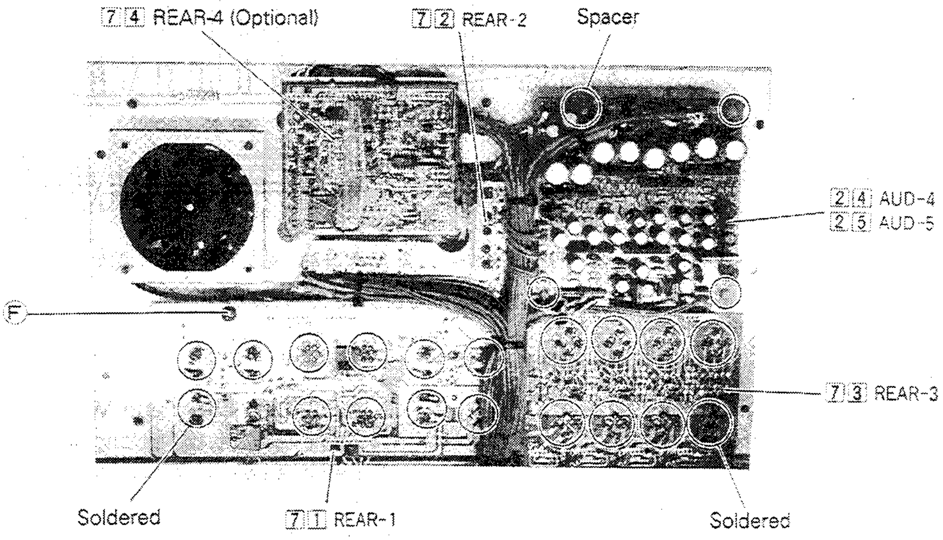

Fig. 1-2-4

1.2.3 Group F

1. OPERATION CPU board

1) Remove four screws Ⓗ and the board cover.
2) Disconnect connectors concerned and remove the board.

2. OPERATION KEY-1 board

1) Remove the OPERATION CPU board.
2) Remove seven screws retaining the OPERATION KEY-1 board.

3. OPERATION KEY-2 board

1) Remove five screws Ⓙ retaining the board cover to remove it.
2) Remove the AUDIO-6 board. (Refer to 1.2.3.4.)
3) Remove four screws retaining the OPERATION KEY-2 board and disconnect connectors concerned to remove the board.

4. AUDIO-6 board (Incl. 27 JACK, 28 VR boards)

1) Remove five screws Ⓙ retaining the board cover to remove it.
2) Remove all VR knobs.
3) Remove two screws Ⓛ and a screw Ⓚ and disconnect connectors concerned to remove the board.

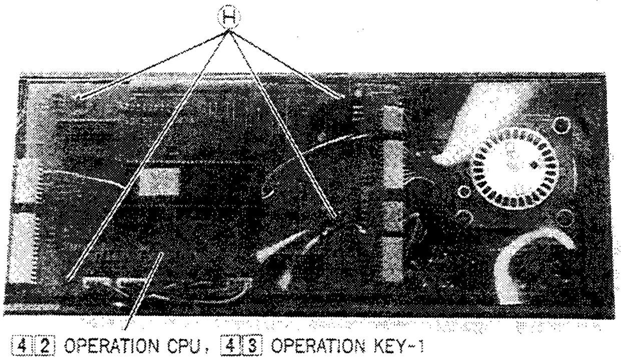

Fig. 1-2-5 (A) (Actually equipped with black cover)

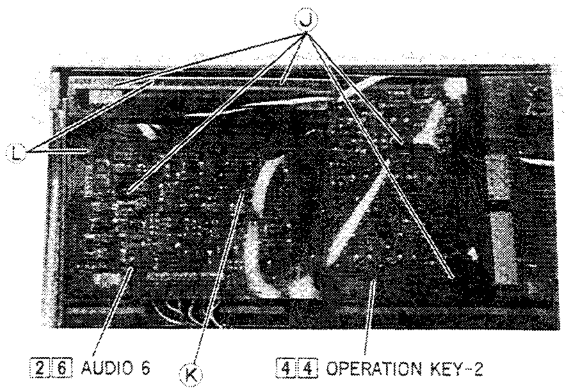

Fig. 1-2-5 (B) (Actually equipped with black cover)

1.3 INTERNAL SWITCHES

Note:
- *For location of respective switches, see "Location of test points and VRs" at the back of the section 3.*
- *Numeral and alphabet in parentheses (4 I, for example) following a symbol number indicates the section where the part is located in the board.*

1.3.1 Function of switch

10 R/P Y

Symbol No.	Switch Name	Setting at Shipment	Function
S1 (4 I)	DOC switch	S1 OFF [□] ON	ON : DOC circuit is activated except in SEARCH mode. OFF : DOC circuit is inactivated.
S2 (7 E)	SW POINT MASK switch	S2 ON [□] OFF	ON : SW point MASK circuit is activated. OFF : SW point MASK circuit is inactivated.

12 R/P COLOR 2

Symbol No.	Switch Name	Setting at Shipment	Function
S1 (1B)	Adjusting switch	SW1 OFF [□] ON	To be used REF. burst adjustment.
SW301(A3)	Adjusting switch	Changeable (Set by adjustment.)	To be used in P. burst phase detect adjustment mode.
SW302 (2C)	Adjusting switch	SW302 ADJ. [□] NORM	For adjusting mode of cross talk cancel circuit.
SW303 (2D)	Adjusting switch	SW303 ADJ. [□] NORM	For adjusting mode of cross talk cancel circuit.

16 R/P ADJUST

Symbol No.	Switch Name	Setting at Shipment	Function
S1 (4 E)	Adjusting switch	S1 RAP [□] NORM	RAP : For adjusting mode of playback picture recorded by the same set. For detail, refer to the Technical Guide (No. T-9024) for BR-S822/S622 (Section 6.18 "RAP MODE", page 6-23). NORM : For normal operation Usually set to NORM position.
S2 (4 E)	Adjusting switch	S2 RAP 2 [□] RAP 1	Effective with S1 set to RAP position RAP 1 : For adjusting mode of CH-1 head. RAP 2 : For adjusting mode of CH-2 head.
D23 (4 E)	RAP MODE LED	—	When S1 set to RAP position, RAP MODE LED is turned on.

1 7 Y COMB

<table>
<tr><th>Symbol No.</th><th>Switch Name</th><th>Setting at Shipment</th><th>Function</th></tr>
<tr><td>SW1-1 (7 I)
1-2
1-3
1-4</td><td>PB Y COMB FILTER LIMTTER LEVEL setting switch</td><td>S1
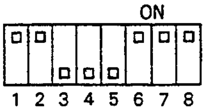 </td><td>
<table>
<tr><th colspan="4">SW1</th><th rowspan="2">LIMITTEER LEVEL</th></tr>
<tr><th>4</th><th>3</th><th>2</th><th>1</th></tr>
<tr><td>OFF</td><td>OFF</td><td>OFF</td><td>OFF</td><td>Most</td></tr>
<tr><td>OFF</td><td>OFF</td><td>OFF</td><td>ON</td><td>↑</td></tr>
<tr><td>OFF</td><td>OFF</td><td>ON</td><td>OFF</td><td></td></tr>
<tr><td>⋮</td><td>⋮</td><td>⋮</td><td>⋮</td><td></td></tr>
<tr><td>ON</td><td>ON</td><td>ON</td><td>OFF</td><td>↓</td></tr>
<tr><td>ON</td><td>ON</td><td>ON</td><td>ON</td><td>Least</td></tr>
</table>
Do not change the original setting at shipment.</td></tr>
<tr><td>1-5
1-6
1-7</td><td>REF. SIGNAL LINE SELECT switch</td><td></td><td>
<table>
<tr><th colspan="3">SW1</th><th rowspan="2">Reference signal addition line</th></tr>
<tr><th>5</th><th>6</th><th>7</th></tr>
<tr><td>ON</td><td>ON</td><td>ON</td><td>Non-addition</td></tr>
<tr><td>OFF</td><td>ON</td><td>ON</td><td>11 H</td></tr>
<tr><td>ON</td><td>OFF</td><td>ON</td><td>12 H</td></tr>
<tr><td>OFF</td><td>OFF</td><td>ON</td><td>13 H</td></tr>
<tr><td>ON</td><td>ON</td><td>OFF</td><td>14 H</td></tr>
<tr><td>OFF</td><td>ON</td><td>OFF</td><td>15 H</td></tr>
<tr><td>ON</td><td>OFF</td><td>OFF</td><td>16 H</td></tr>
<tr><td>OFF</td><td>OFF</td><td>OFF</td><td>17 H</td></tr>
</table>
• In Recording
Select a reference signal addition line for the AUTO EQ circuit with S1-5, S1-6, S1-7. When the default line (11 H) is in use, select another line referring to the above table.
• In Playback
Set these switches for the line used to record reference signal for the AUTO EQ circuit.</td></tr>
<tr><td>1-8</td><td>Not used</td><td></td><td></td></tr>
<tr><td>SW2 (7 E)</td><td>COMB FILTER swtich</td><td>S2
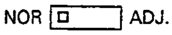 </td><td>NOR : To activate comb filter always.
ADJ. : To inactivate comb filter at all.</td></tr>
</table>

1 9 OUTPUT

<table>
<tr><th>Symbol No.</th><th>Switch Name</th><th>Setting at Shipment</th><th>Function</th></tr>
<tr><td>SW1 (8 I)</td><td>AUTO EQ switch</td><td>SW1
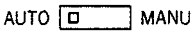 </td><td>AUTO : In S-VHS playback mode, if reference signal is recorded on the line selected by S1-5, -6 and -7 of 1 7 Y COMB board, AUTO EQ functions.
MANU : AUTO EQ does not function.
Usually set to AUTO position.</td></tr>
<tr><td>D5 (10 I)</td><td>AUTO EQ REF. SIGNAL DETECTION LED</td><td>—</td><td>In S-VHS playback mode, if reference signal is recorded on the line selected by S1-5, -6 and -7 of 1 7 Y COMB board, AUTO EQ REF. SIGNAL DET. LED lights regardless of SW1 setting.</td></tr>
</table>

3 1 M. CTL & R. SERVO

<table>
<tr><th>Symbol No.</th><th>Switch Name</th><th>Setting at Shipment</th><th>Function</th></tr>
<tr><td>SW1</td><td>Adjusting switch</td><td>SW1
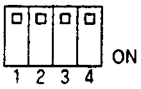 </td><td>Usually set all SW1 switches to OFF.
When power is turned on after SW1 was set, mode changes as shown in the following table.
Note: If power is turned on with SW1 set on all, adjustment data of R. SERVO circuit will be initialized. On such an occasion, readjust R. SERVO circuit again (see 2.5).
<table>
<tr><th>1</th><th>2</th><th>3</th><th>4</th><th>Mode</th></tr>
<tr><td></td><td></td><td></td><td></td><td>Normal operation</td></tr>
<tr><td>ON</td><td></td><td></td><td></td><td>Load end stop mode,
Reel FG duty adjustment mode</td></tr>
<tr><td></td><td>ON</td><td></td><td></td><td>F. cassette loading torque check mode</td></tr>
<tr><td>ON</td><td>ON</td><td></td><td></td><td>Play back tension adjustment mode,
Warning tension setting mode</td></tr>
<tr><td></td><td></td><td>ON</td><td></td><td>C. cassette loading torque data setting mode (Up)</td></tr>
<tr><td>ON</td><td></td><td>ON</td><td></td><td>C. cassette loading torque data setting mode (Down)</td></tr>
<tr><td></td><td>ON</td><td>ON</td><td></td><td>Inhibit</td></tr>
<tr><td>ON</td><td>ON</td><td>ON</td><td></td><td>Inhibit</td></tr>
<tr><td></td><td></td><td></td><td>ON</td><td>Emergency roll mode</td></tr>
<tr><td>ON</td><td></td><td></td><td>ON</td><td>Inhibit</td></tr>
<tr><td></td><td>ON</td><td></td><td>ON</td><td>Inhibit</td></tr>
<tr><td>ON</td><td>ON</td><td></td><td>ON</td><td>Inhibit</td></tr>
<tr><td></td><td></td><td>ON</td><td>ON</td><td>Reverse torque data setting mode (Up)</td></tr>
<tr><td>ON</td><td></td><td>ON</td><td>ON</td><td>Reverse torque data setting mode (Down)</td></tr>
<tr><td></td><td>ON</td><td>ON</td><td>ON</td><td>Starting torque check mode</td></tr>
<tr><td>ON</td><td>ON</td><td>ON</td><td>ON</td><td>Single unit adjustment mode
(To initialize adjustment data)</td></tr>
</table>
</td></tr>
<tr><td>SW2</td><td>Tact switch for adjustment</td><td>—</td><td>To be used in adjustment mode.
To raise/decline torque and to set data in adjustment modes set by SW1. Every pressing increases torque by 2 g-cm.</td></tr>
</table>

60 TBC-1 (SA-T22E optional)

Symbol No.	Switch Name	Setting at Shipment	Function
SW1 (7 I)	Adjusting switch (Y/C TIMING)	—	Refer to Item No. 15 "Y/C timing adjustment" in Sect. 3.5.3.
SW2-1 (6 I)	NTSC V. BLANKING PERIOD SELECT switch	SW2 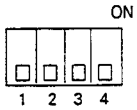	Invalid with SW2-2 set to OFF.
SW2-2	NTSC/PAL		ON : NTSC (Make sure to set to OFF.) OFF : PAL
SW2-3	Not used		—
SW2-4	Not used		—
SW3 (5 I)	Adjusting switch (FORCED TBC)	SW3 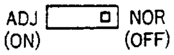	ADJ (ON) : TBC is activated regardless of setting of TBC switch on the front sub-panel (on the back of operation panel. NOR (OFF): TBC functions according to TBC switch setting.

62 TBC-3 (SA-T22E optional)

Symbol No.	Switch Name	Setting at Shipment	Function
SW1-1 (3 H)	Adjusting switch	SW1 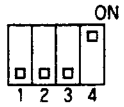	ON : For decoder adjustment mode OFF : For normal operation Usually set to OFF position.
SW1-2	SYNC DETECT MODE switch		ON : For period detection mode OFF : For width detection mode and period detection mode
SW1-3	W. CLOCK SELECT (1)		ON : For AFC mode OFF : For APC selection mode to affect SW1-4
SW1-4	W. CLOCK SELECT (2)		With SW1-3 set to OFF: ON : For APC mode OFF : For AFC-APC automatic selection mode

6 5 TIME CODE G/R (SA-R22E optional)

Symbol No.	Switch Name	Setting at Shipment	Function
S8-1 (13 A)	VITC H POSITION CHANGE switch	S8 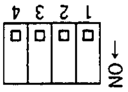 (Showing the state of S8 built in SYSCON board)	For changing VITC position in horizontal direction Do not change the setting without reason.
S8-2	UNDEFINED BIT OPERATION switch		Bit 58 is not defined for LTC while bit 74 is not defined for VITC. These bits are regarded as "0" until they are defined by SMPTE. ON : "1" OFF : "0" Make sure to set this switch to OFF position usually.
S8-3	Not used		—
S8-4	ERROR BYPASS ON/OFF		ON : To activate the error bypass circuit OFF : To inactivate the error bypass circuit

6 7 45 PIN MAIN (SA-K28E optional)

<table>
<tr><th>Symbol No.</th><th>Switch Name</th><th>Setting at Shipment</th><th>Function</th></tr>
<tr><td>SW1
SW2
SW3</td><td>Not used</td><td>SW1, SW2, SW3
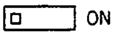</td><td>Ineffective when the set is connected with the professional S22 series</td></tr>
<tr><td>SW4-1 (3 A)</td><td>VTR SELECT switch</td><td rowspan="3">SW4
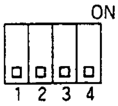</td><td rowspan="3">
<table>
<tr><th colspan="2">Switch \ Item</th><th>Search Max. Speed Data</th><th>CTL Mute (FF/REW)</th></tr>
<tr><td>SW4-1</td><td>ON : 22 series</td><td>Depends on SW4-2</td><td>OFF</td></tr>
<tr><td></td><td>OFF: BR-S605</td><td>x7</td><td>ON</td></tr>
<tr><td>SW4-2</td><td>ON : RM-86</td><td>x10</td><td></td></tr>
<tr><td></td><td>OFF: Others</td><td>x32</td><td></td></tr>
</table>
</td></tr>
<tr><td>SW4-2</td><td>CONTROLLER SELECT switch</td></tr>
<tr><td>SW4-3, 4-4</td><td>Not used</td></tr>
</table>

5 5 RS-232C (SA-K27E optional)

<table>
<tr><th>Symbol No.</th><th>Switch Name</th><th>Setting at Shipment</th><th>Function</th></tr>
<tr><td>SW1
SW2
SW3</td><td>Not used</td><td>SW1, SW2, SW3
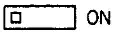</td><td>Ineffective when the set is connected with the professional S22 series</td></tr>
<tr><td>SW4-1
SW4-2</td><td>DATA RATE SELECT switch</td><td rowspan="3">SW4
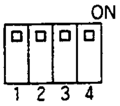</td><td>
<table>
<tr><th>SW4-1</th><th>SW4-2</th><th>bps</th></tr>
<tr><td>OFF</td><td>OFF</td><td>1200</td></tr>
<tr><td>ON</td><td>OFF</td><td>2400</td></tr>
<tr><td>OFF</td><td>ON</td><td>4800</td></tr>
<tr><td>ON</td><td>ON</td><td>9600</td></tr>
</table>
</td></tr>
<tr><td>SW4-3</td><td>Not used</td><td>—</td></tr>
<tr><td>SW4-4</td><td>TEST MODE ON/OFF switch</td><td>ON : For normal operation
OFF : For test mode (Factory use only)
Usually set to ON position.</td></tr>
</table>

1.4 MEMORY SWITCH

Mode setting of this model can be operated with the memory switch, which the hour meter is built in.
For operation of the memory switch, refer to the instruction book (pages 37 through 46 for S822 or pages 26 through 33 for S622).

1.4.1 Initialization of memory switch

To initialize the memory switch as it was at shipment, proceed to do the following steps.

1. Eject the cassette tape and turn off the power switch.
2. Press the EJECT button and the COUNTER RESET button simultaneously while turning on the power switch. Again turn off the power switch after 5 or more seconds elapsed.
3. The memory switch is initialized as it was set at shipment.

1.4.2 Indication of ROM and microprocessor versions

The memory switch of this model has a function to display ROM and microprocessor versions.
The following table shows details of the display.

Memory SW No.	Board Name	Symbol No.	Version No. (X)
900	[4][0] SYSCON	IC2	PGD30620-2-X
901	[3][1] M. CTL & R. SERVO	IC1	PGD30241-10-XX
902	[4][2] OPERATION CPU	IC1	µPD78P214CW-0XX
903	[6][7] 45 PIN I/F	IC1	µPD75P116CW-2XX
	[5][5] RS-232C I/F	IC16	PGD30240-12-X
—	[4][1] AVM/OS	IC13	µPD75P116CW-3XX

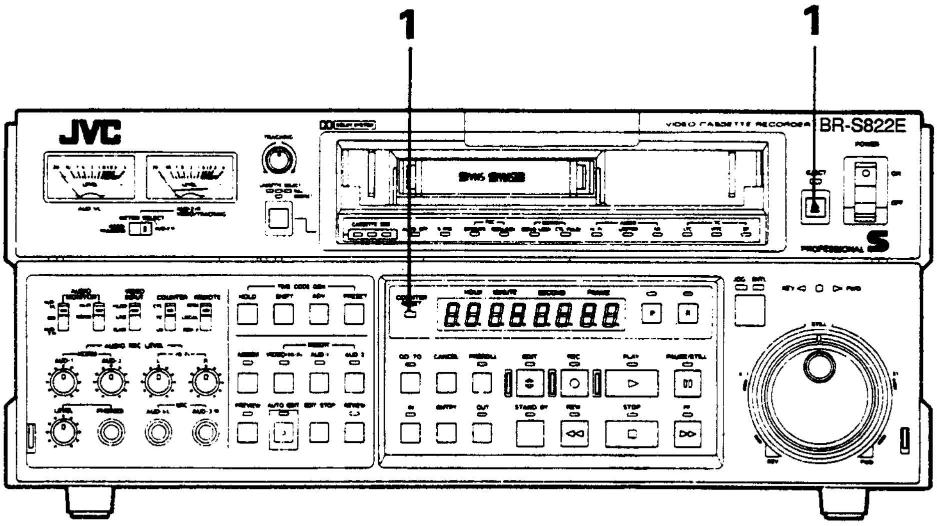

1. To preset the memory switch

1.5 7-PIN CABLE

There are two kinds of Y/C OUTPUT connectors provided for this model; namely, the Y/C443 OUTPUT and the Y/C924 or Y/C686 OUTPUT (for use of optional SA-E92E).
When this set is used as a playback machine, use any cable of the following.

	Part No.	Wiring diagram and Color of bushing		Main applicable models
Y/C443 output cable	VC-G10XX (optional) PGZ00793-006 (service part)	Diagram ②	Blue	BR-S822/S622 BR-S811/S611 BR-S411 BR-S405 KR-M800/M820
	PGZ00752-01-01 (service part)	Diagram ①	Red	
Y/C686 output cable Y/C924	PGZ00752-01-01 (service part)	Diagram ①	Red	BR-S822/S622

Note: Do not use these cables for any set other than those specified above as applicable models. Otherwise characteristics of the set becomes different from the original.

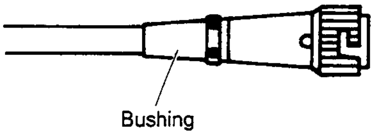

- **Internal wiring of cable**

Diagram ①

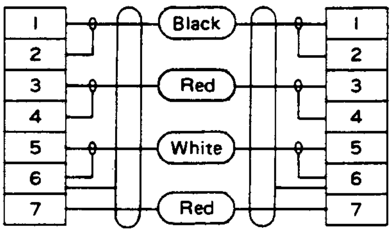
1
2
3
4
5
6
7
Black
Red
White
Red
1
2
3
4
5
6
7

Diagram ②

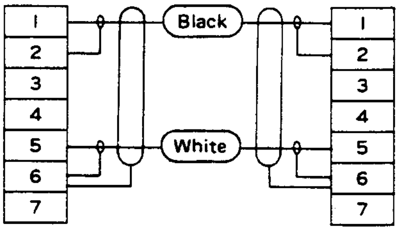
1
2
3
4
5
6
7
Black
White
1
2
3
4
5
6
7

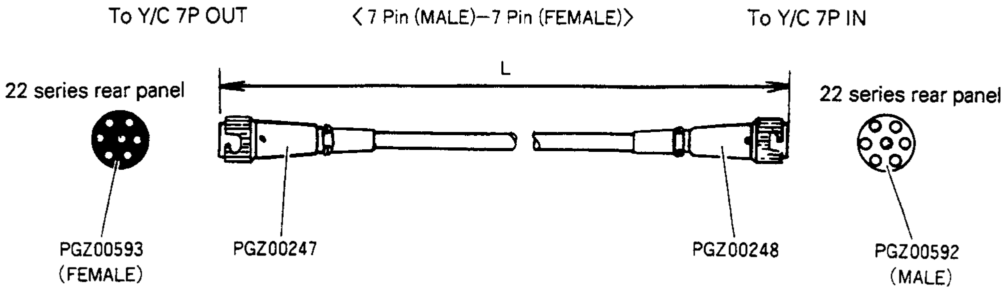
To Y/C 7P OUT
〈7 Pin (MALE)—7 Pin (FEMALE)〉
To Y/C 7P IN
22 series rear panel
L
22 series rear panel
PGZ00593
(FEMALE)
PGZ00247
PGZ00248
PGZ00592
(MALE)

1.6 WHEN IN TROUBLE

1.6.1 To take cassette out of set manually

If a loaded tape cannot be ejected because of electrical failure, etc., take it out in the following manner.

1. Turn off the power and remove the top cover.
2. Open the operation panel and set the DIP switch SW1-4 on 31 M. CTL & R. SERVO board to ON.

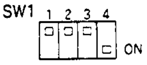

3. Turn on the power, and the set enters the emergency roll mode.
4. Depress the tact switch SW2 on the M. CTL board while rotating the loading motor clockwise. The mechanism starts unloading while taking in the slack of the tape.
5. After the mechanism returns to the unloading end position, turn off the power and turn the gear of the cassette housing clockwise while taking out the cassette tape. If it is hard to turn the gear, remove the cassette panel and do the same.

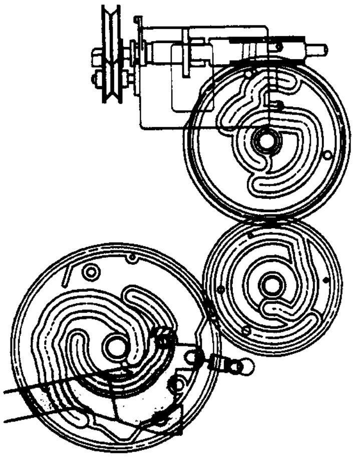

Fig. 1-6-1 F cassette unloading end position

1.6.2 Troubleshooting

1. Video system

Problem	Cause and Check
Abnormal operation of Auto EQ (No. 400, 401)	1. Is the same reference signal line selected for recording and playback ? (See 1.3 17 Y COMB board.) 2. Are signal lines to record VITC and reference signal for Auto EQ separate from each other? (See 1.3 and Memory switches No. 400 and No.401.)
No picture appears.	Check the setting position of brush and its contact pressure. (See 2.3.3.)
No V. lock in TBC operation (No. 100)	Are REC switching point and PB switching point set the same? (For instance, recording was operated with 6.5H switching point but PB switching point is set to 1.25H.) Set PB switching point to be the same as REC switching point. (See Memory switch No. 100.)
Abnormal tint when the COMPONENT output is connected to MII VTR or β-cam VTR. (No. 104)	Check applicability of Memory switch No. 104 COMPONENT OUT LEVEL to the connected equipment.
Uncolored playback picture	Check if SW1 on 12 R/P COLOR board is wrongly set to "ADJ" position. (See 1.3.)
In TBC operation, playback picture is abnormal in the level and phase.	Check setting of the TBC operation section on the front sub panel.
Many dropouts	Check if S1 on 10 R/P Y board is wrongly set to "OFF". (See 1.3.)
Signals in blanking period are not recorded. (No. 400, 401, 601)	1. Are signal lines used separately for recording VITC and impressing reference signal for Auto EQ set by 17 Y COMB board ? (See 1.3 and Memory switches No. 400 and No. 401.) 2. Check if Memory switch No. 601 V. BLANK MASK is wrongly set to "ON" in TBC operation.
H. distortion at editing points (No. 100)	Check if Memory switch No. 001 AUTO H. PHASE is wrongly set to "OFF" ?
Inverted picture in S-VHS mode (No. 101)	Check S-VHS REC EQ. (See Memory switch No. 101.)

2. Audio system

Problem	Cause and Check
Hi-Fi audio signal is not recorded. (No. 200)	Check if Memory switch No. 200 Hi-Fi AUDIO REC is wrongly set to "OFF".
No audio output (No. 203)	Check setting of Memory switch No. 203 AUDIO OUT.
Normal audio CH-2 (AUD-2) signal is not recorded. (No. 206)	Check if Memory switch No. 206 AUD-2/LTC is wrongly set to "LTC".

3. Operation system

Problem	Cause and Check
Any operation command is not accepted.	1. Check if the REMOTE switch on the front panel is wrongly set to "LOCAL". 2. Check if the MENU SET switch on the front sub panel is wrongly set to "ON".
Slow Tape speed (x16 speed at maximum) (No. 319)	Check if Memory switch No. 319 TAPE MAX SPEED is wrongly set to "x16".
Recording is impossible with unlocked cassette tape (recording prevention tab is not yet broken).	Check if Memory switch No. 304 RECORDING INHIBIT is wrongly set to "ON".
Deck enters Playback mode as tape is rewound to the beginning of tape. (No. 311)	Check if Memory switch No. 311 MODE AT TAPE BEGIN is wrongly set to "PLAY".
Deck enters Recording mode as the power is turned on. (No. 305)	Check if Memory switch No. 305 REPEAT REC is wrongly set to "ENABLE".
Inoperative by remote control unit	1. Check setting of the REMOTE switch on the front panel. "9 PIN" : To use a 9-pin remote control unit "REM-2" : To use a 45-pin remote control unit (when optional SA-K28 connected) or an RS-232C remote control unit (when optional SA-K27 connected) 2. When RS-232C remote control unit is connected, check the conformity of every data rate.

4. Syscon system

Problem	Cause and Check
LTC is not recorded. (No. 206)	Check if Memory switch No. 206 AUD-2/LTC is wrongly set to "AUD-2".
VITC is not read or output. (No. 400, 401, 601)	1. Are signal lines used separately for recording VITC and for impressing reference signal for Auto EQ ? (See 1.3, $\boxed{1}\boxed{7}$ Y COMB and Memory switches No. 400 and No. 401.) 2. Check if Memory switch No. 601 V. BLANK MASK is wrongly set to "ON" in TBC operation.

5. Mechanism system

Problem	Cause and Check
Mechanism malfunctions.	Check that all switches of DIP SW1 on $\boxed{3}\boxed{1}$ M. CTL & R. SERVO board are set to "OFF". (See 1.3.)

1.6.3 Check of supply voltage

When trouble occurs in the power supply system, first check the primary fuse and fuse of $\boxed{0}\boxed{5}$ FUSE board if there is something blown out or not. Secondly, confirm that all of output voltages of the switching regulator meet the specifications. For voltage measurement, use CN1 on $\boxed{0}\boxed{5}$ FUSE board. (It is convenient to measure at test points of an extension board PGJ05044.)

Output	Connector of SW Regulator	Measuring Point (CN1, $\boxed{0}\boxed{5}$ FUSE)	Voltage (V)
−15 V	CN3-1 CN3-2 (GND)	CN1-24A CN1-23A	−15.0 ± 0.75
+15 V	CN4-1 CN4-2 (GND)	CN1-31A, 32A CN1-29A, 30A	+15.0 ± 0.75
+8 V	CN4-3 CN4-4 (GND)	CN1-27A, 28A CN1-25A, 26A	+8.0 ± 0.4
+12 V	CN5-1 CN5-2	CN1-22A CN1-21A	+12.5 ± 0.625
+18 V	CN5-3 CN5-4 (GND)	CN1-20A CN1-19A	+18.0 ± 0.9

1 .7 PROTOCOL OF 9-PIN REMOTE CONNECTOR

In this section, the following is the contents of the remote control signal which is used for 9-pin connector of the PROFESSIONAL S22 series (We will call the 22 series in the followings.).

In this protocol, it is defined that the CONTROLLER means the equipment which controls a VTR, and the DEVICE means the equipment which is controlled.

EX 1. When two VTRs are connected (SWAP editing) , the RECORD VTR is called as a CONTROLLER, and PLAY VTR as a DEVICE.

EX 2. When an editor is connected to a VTR, the editor is called as a CONTROLLER, and the VTR as a DEVICE.

1.7.1 SPECIFICATION OF 9-PIN CONNECTOR

Interface connector : 9-pin D-sub female

When two VTRs are connected, a pin arrangement of the RECORD VTR (only BR-S822E) changes the CONTROLLER. When the REMOTE switch of the front panel sets to the 9-PIN, a pin arrangement of the 9-pin connector changes the DEVICE. A pin arrangement of BR-S622E/522E becomes always the DEVICE.

Pin	CONTROLLER	DEVICE
1	Frame Ground	Frame Ground
2	Receive A	Transmit A
3	Transmit B	Receive B
4	Transmit Common	Receive Common
5	Spare	Spare
6	Receive Common	Transmit Common
7	Receive B	Transmit B
8	Transmit A	Receive A
9	Frame Ground	Frame Ground

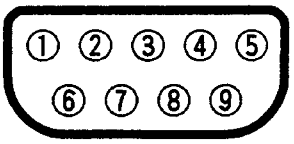

9-pin CONNECTOR

1.7.2 COMMUNICATION FORMAT

Format : EIA RS-422A

Mode : No synchronization

Character length : 1 Start bit + 8 Data bits + 1 Parity bit + 1 Stop bit

Data rate : 38400 bps

Parity : Odd parity $D_0 + D_1 + \cdots + D_7 + P$ = An odd number

Start bit : 1bit "SPACE"

Stop bit : 1bit "MARK"

- The composition of bits.

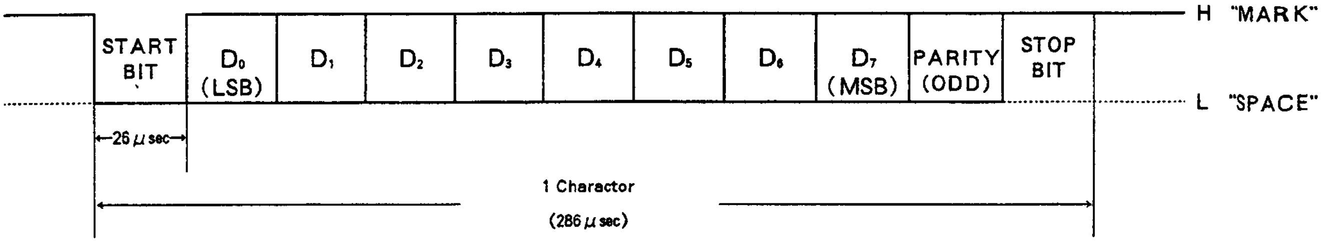

1.7.3 COMMAND FORMAT

All the data communications is composed of the CMD1/DATA COUNT, CMD2, DATA and CHECKSUM, and commands are transmitted in order from a LSB of the CMD1/DATA COUNT. When the DATA COUNT is zero, no data is transmitted, but when the DATA COUNT is not zero, a number of data which correspond with the value of DATA COUNT are inserted between the CMD2 and CHECKSUM.

1. COMMAND BLOCK FORMAT

The data communication between the CONTROLLER and the DEVICE is performed as follows.

CMD 1	DATA COUNT	CMD 2	DATA n (n=0~15)	CHECKSUM	→
MSD	LSD				
← 1 Byte →		← 1 Byte →	← n Byte →	← 1 Byte →	

2. CONTENTS OF COMMAND

CMD 1 : Indicates the value according to the function and direction of the command.

CMD1	FUNCTION	DIRECTION Controller Device
0	SYSTEM CONTROL	→
1	SYSTEM CONTROL RETURN	←
2	TRANSPORT CONTROL	→
4	PRESET & SELECT CONTROL	→
6	SENSE REQUEST	→
7	SENSE RETURN	←

DATA COUNT	: Indicates the number of DATA bytes (0~15) where inserted between the CMD2 and CHECKSUM.
CMD 2	: Designates the particular command.
DATA	: When the data is added to the COMMAND which is defined by the CMD1 and CMD2, DATA-1 to DATA-15 shows the value corresponding to their contents.
CHECKSUM	: This is used for checking up on the data communication error, adds from the first byte of the COMMAND block to the last DATA byte, and indicates the least significant 8 bits.

```
EX.  COMMAND  "61  4C  84"
  LSB            MSB
    1 0 0 0   0 1 1 0   (=6 1)
    0 0 1 1   0 0 1 0   (=4 C)
+)  0 0 1 0   0 0 0 1   (=8 4)
  ---------------------
    1 0 0 0   1 1 0 0   (=3 1)
   CHECKSUM  "31"
```

1.7.4 COMMAND TABLE

In this table, each kind marks which are shown in a column of the DEVICE show as followings.

1) The COMMAND of "○" mark is applied in the model, if there is printed in the column of RETURN FROM DEVICE, the DEVICE will send back RETURN COMMAND with data, but there is no printed the DEVICE will send back "ACK:10.01".

2) The COMMAND of "△" mark, when the DEVICE receives the command, the DEVICE will send back "ACK:10.01", but does not put into the action.

3) The COMMAND of "×" mark is not applied, the DEVICE will send back "NAK undifined:11.12.01" with a data.

4) The COMMAND of "✻" mark, when the model as CONTROLLER can be sent to the DEVICE.

COMMAND FROM CONTROLLER			RETURN FROM DEVICE			DEVICE		
NAME	CMD 1	CMD 2	NAME	CMD 1	CMD 2	BR-S822E	BR-S622E	BR-S522E
LOCAL DISABLE	00	0C	ACK	10	01	○	○	○
DEVICE TYPE REQUEST	00	11	DEVICE TYPE RETURN	12	11	○ *	○	○
LOCAL ENABLE	00	1D	ACK	10	01	○	○	○
STOP	20	00	ACK	10	01	○ *	○	○
PLAY	20	01	ACK	10	01	○ *	○	○
REC	20	02	ACK	10	01	○	○	△
STANDBY OFF	20	04	ACK	10	01	○ *	○	○
STANDBY ON	20	05	ACK	10	01	○ *	○	○
EJECT	20	0F	ACK	10	01	○ *	○	○
FAST FWD	20	10	ACK	10	01	○ *	○	○
JOG FWD	2X	11	ACK	10	01	○ *	○	○
VAR FWD	2X	12	ACK	10	01	○ *	○	○
SHUTTLE FWD	2X	13	ACK	10	01	○ *	○	○
REWIND	20	20	ACK	10	01	○ *	○	○
JOG REV	2X	21	ACK	10	01	○ *	○	○
VAR REV	2X	22	ACK	10	01	○ *	○	○
SHUTTLE REV	2X	23	ACK	10	01	○ *	○	○
PREROLL	20	30	ACK	10	01	○ *	○	○
CUE UP WITH DATA	24	31	ACK	10	01	○ *	○	○
SYNC PLAY	20	34	ACK	10	01	○	○	○
PROGRAM PLAY +	21	38	ACK	10	01	○	○	○
PROGRAM PLAY −	21	39	ACK	10	01	○	○	○
PREVIEW	20	40	ACK	10	01	○	△	△
REVIEW	20	41	ACK	10	01	○	△	△
AUTO EDIT	20	42	ACK	10	01	○	△	△
TENSION RELEASE	20	52	ACK	10	01	○	○	○
ANTI-CLOG TIMER DISABLE	20	54	ACK	10	01	○ *	○	○
ANTI-CLOG TIMER ENABLE	20	55	ACK	10	01	○ *	○	○
FULL EE OFF	20	60	ACK	10	01	○ *	○	△
FULL EE ON	20	61	ACK	10	01	○ *	○	△
SELECTED EE ON	20	63	ACK	10	01	○	△	△
EDIT OFF	20	64	ACK	10	01	○ *	△	△
EDIT ON	20	65	ACK	10	01	○	△	△
TIMER-1 PRESET	44	00	ACK	10	01	○	○	○
TIME CODE PRESET	44	04	ACK	10	01	○	○	△
U-BIT PRESET	44	05	ACK	10	01	○	○	△
TIMER-1 RESET	40	08	ACK	10	01	○ *	○	○
IN ENTRY	40	10	ACK	10	01	○ *	○	○
OUT ENTRY	40	11	ACK	10	01	○ *	○	○
IN PRESET	44	14	ACK	10	01	○ *	○	○
OUT PRESET	44	15	ACK	10	01	○ *	○	○
IN SHIFT +	40	18	ACK	10	01	○ *	○	○
IN SHIFT −	40	19	ACK	10	01	○ *	○	○

COMMAND FROM CONTROLLER			RETURN FROM DEVICE			DEVICE		
NAME	CMD 1	CMD 2	NAME	CMD 1	CMD 2	BR-S822E	BR-S622E	BR-S522E
OUT SHIFT +	40	1A	ACK	10	01	○ *	○	○
OUT SHIFT −	40	1B	ACK	10	01	○ *	○	○
IN RESET	40	20	ACK	10	01	○ *	○	○
OUT RESET	40	21	ACK	10	01	○ *	○	○
IN RECALL	40	24	ACK	10	01	○	○	○
OUT RECALL	40	25	ACK	10	01	○	○	○
EDIT PRESET	41	30	ACK	10	01	○ *	○	△
PREROLL TIME PRESET	44	31	ACK	10	01	○ *	○	○
TAPE/AUTO SELECT	41	32	ACK	10	01	○	○	△
SERVO REFERENCE SELECT	41	33	ACK	10	01	○	○	△
HEAD SELECT	41	34	ACK	10	01	△	△	△
COLOR FRAME SELECT	41	35	ACK	10	01	○ *	△	△
TIMER MODE SELECT	41	36	ACK	10	01	○	○	○
INPUT CHECK	41	37	ACK	10	01	○	○	△
AUTO MODE OFF	40	40	ACK	10	01	△	△	△
AUTO MODE ON	40	41	ACK	10	01	△	△	△
VIDEO REFERENCE DISABLE OFF	40	48	ACK	10	01	○	○	△
VIDEO REFERENCE DISABLE ON	40	49	ACK	10	01	○	○	△
TC GEN DATA SENSE	61	0A	GEN TC DATA	74	08	○	○	○
			GEN UB DATA	74	09	○	○	○
			GEN TC & UB DATA	78	08	○	○	○
CURRENT TIME SENSE	61	0C	TIMER-1 DATA	74	00	○ *	○	○
			LTC TIME DATA	74	04	○ *	○	○
			LTC INTERPOLATED TIME DATA	74	14	○ *	○	○
			LTC UB DATA	74	05	○ *	○	○
			LTC TIME & UB DATA	78	04	○ *	○	○
			LTC INTERPOLATED TIME & UB DATA	78	14	○ *	○	○
			VITC TIME DATA	74	06	○ *	○	○
			VITC HOLD TIME DATA	74	16	○ *	○	○
			VITC UB DATA	74	07	○ *	○	○
			VITC TIME & UB DATA	78	06	○ *	○	○
			VITC HOLD TIME & UB DATA	78	16	○ *	○	○
			REQUEST TIME MISSING	70	0D	○ *	○	○
IN DATA SENSE	60	10	IN DATA	74	10	○ *	○	○
OUT DATA SENSE	60	11	OUT DATA	74	11	○ *	○	○
STATUS SENSE	61	20	STATUS DATA	7X	20	○ *	○	○
COMMAND SPEED SENSE	60	2E	COMMAND SPEED DATA	7X	2E	○	○	○
VAR MEM SPEED SENSE	60	2F	VAR MEM SPEED DATA	7X	2F	×	×	×
EDIT PRESET SENSE	60	30	EDIT PRESET DATA	71	30	○	○	△
PREROLL TIME SENSE	60	31	PRETOLL TIME DATA	74	31	○ *	○	○
TIMER MODE SENSE	60	36	TIMER MODE DATA	71	36	○—*	○	○

①COMMAND FROM CONTROLLER

- LOCAL DISABLE : 00.0C

When receiving this command, all operational functions of the DEVICE will be disabled.

- DEVICE TYPE REQUEST : 00.11
- DEVICE TYPE : 12.11

When the DEVICE receives the "DEVICE TYPE REQUEST : 00.11" command, the "DEVICE TYPE : 12.11" with 2 bytes data will be sent back to the CONTROLLER as a response.

MODEL	DATA-1	DATA-2
JVC SVHS-1	F1	1F
JVC SVHS-2	F1	0B
OTHER TYPE-1	11	00
OTHER TYPE-2	21	25

Data are changed in accordance with the setting of the memory switch which name is No.317 9-PIN DEVICE TYPE ID.

- LOCAL ENABLE : 00.1D

When receiving this command, the front panel operation of the DEVICE will be enabled in accordance with the settings of the memory switch. When the power of the DEVICE is turned on, it will be set to the LOCAL ENABLE state.

- ACK : 10.01

When receiving acknowledgment command, the DEVICE will send back this command.

- NAK : 11.12

When detecting the following errors, the DEVICE will send back this command as not-acknowledgment. Bit-7 to bit-0 of DATA-1 is set in accordance with the contents of the errors.

DATA-1

Bit-7	6	5	4	3	2	1	0
TIME OUT	FRAMING ERROR	OVERRUN ERROR	PARITY ERROR		CHECKSUM ERROR		UNDEFINED COMMAND

- STOP : 20.00
- PLAY : 20.01
- REC : 20.02
- STANDBY OFF : 20.04
- STANDBY ON : 20.05
- FAST FWD : 20.10
- REWIND : 20.20

These commands are used for setting of the DEVICE to the specified mode. The "STANDBY OFF : 20.04" command is available only in the STOP mode.

- JOG FWD : 2X.11
- VAR FWD : 2X.12
- SHUTTLE FWD : 2X.13
- JOG REV : 2X.21
- VAR REV : 2X.22
- SHUTTLE REV : 2X.23

When receiving one of the above commands, the DEVICE will start running in accordance with speed data. When only DATA-1 is given, the tape speed will be defined as follows.

TAPE SPEED = $10^{(N/32-2)}$ N : SPEED DATA OF DATA-1 (DECIMAL)

When both DATA-1 and DATA-2 are given, the tape speed is more precise value than the tape speed defined by DATA-1, the tape speed will be defined as follows.

TAPE SPEED = $10^{(N/32-2)} + N'/256 \{10^{(N+1/32-2)} - 10^{(N-32-2)}\}$

N : SPEED DATA OF DATA-1

N ' : SPEED DATA OF DATA-2

- PRE ROLL : 20.30

This command is used for cueing up the DEVICE to the point as follows.

IN POINT – PRE ROLL TIME

- CUE UP WITH DATA : 24.31

This command is used for cueing up the DEVICE to the point defined by DATA-1 to DATA-4.

DATA-1		DATA-2		DATA-3		DATA-4	
10 Frame	1 Frame	10 Second	1 Second	10 Minute	1 Minute	10 Hour	1 Hour
MSD	LSD	MSD	LSD	MSD	LSD	MSD	LSD

Refer to ③TIME DATA FORMAT.

- SYNC PLAY : 20.34

This command is used for setting the DEVICE to the PLAY mode while the phase modification is controlled. When the tape position of the DEVICE is near the PRE ROLL POINT, the DEVICE will execute the SYNC PLAY mode as the tape position is the PRE ROLL POINT.

- PROGRAM PLAY + : 21.38
- PROGRAM PLAY – : 21.39

This commands are used for setting the DEVICE into the play back mode accordance with the DATA-1 as a speed data. At this time range of speed data is –25.5% to +25.5% by 0.1% step.

TAPE SPEED= (×1 PLAY SPEED) ×0.1×SPEED DATA (DECIMAL) SPEED DATA : 00H to FFH

- PREVIEW : 20.40
- REVIEW : 20.41
- AUTO EDIT : 20.42

These commands are used for setting the DEVICE to above specified modes.

- TENSION RELEASE : 20.52

When receiving this command, the DEVICE becomes TENSION RELEASE mode in the state of STOP or STILL in SHUTTLE/JOG/VAR mode.

- ANTI-CLOG TIMER DISABLE : 20.54
- ANTI-CLOG TIMER ENABLE : 20.55

These command are used for selecting DISABLE/ENABLE of the ANTI-CLOG TIMER. When the power of the DEVICE is turned on, it will be set to the ANTI-CLOG TIMER ENABLE.

- FULL EE OFF : 20.60
- FULL EE ON : 20.61

These commands are used for setting or clearing all channels to EE mode.

- SELECT EE ON : 20.63

This command is used for setting each EDIT PRESET channel assigned by the DATA-1 of the "EDIT PRESET : 41.30" command to the EE mode. To clear the EE mode, use the "EDIT OFF : 20.64" command.

- EDIT OFF : 20.64

This command is used for clearing the EDIT mode and also clearing the SELECT EE mode.

- EDIT ON : 20.65

This command is used for setting the DEVICE, which is running at the normal PLAY speed during the EDIT PRESET mode, to the EDIT mode.

- TIMER-1 PRESET : 44.00

This command is used for presetting the value, which has been given by the DATA-1 to DATA-4, to the CTL COUNTER of the DEVICE. As for the data format, refer to "CUE UP WITH DATA : 24.31" command.

- TIME CODE PRESET : 44.04

This command is used for presetting the value, which has been given by the DATA-1 to DATA-4, to the TIME CODE of the time code generator. As for the data format, refer to "CUE UP WITH DATA : 24.31" command.

- U-BIT PRESET : 44.05

This command is used for presetting the value, which has been given by the DATA-1 to DATA-4 as follows, to the USER BIT of the time code generator.

DATA-1		DATA-2		DATA-3		DATA-4	
2nd BINARY GROUP	1st BINARY GROUP	4th BINARY GROUP	3rd BINARY GROUP	6th BINARY GROUP	5th BINARY GROUP	8th BINARY GROUP	7th BINARY GROUP
MSD	LSD	MSD	LSD	MSD	LSD	MSD	LSD

- TIMER-1 RESET : 40.08

This command is used for resetting the CTL COUNTER to zero.

- IN ENTRY : 40.10
- OUT ENTRY : 40.11

These commands are used for storing the value which is displayed on the DEVICE into the IN ENTRY or OUT ENTRY memory as an IN POINT or OUT POINT data.

- IN PRESET : 44.14
- OUT PRESET : 44.15

These commands are used for presetting the value, which has been given by the DATA-1 to DATA-4, into the IN ENTRY or OUT ENTRY memory. As for the data format, refer to "CUE UP WITH DATA : 24.31" command.

- IN SHIFT + : 40.18
- IN SHIFT. − : 40.19

These commands are used for adding or subtracting the value of an IN POINT data, by one frame.

- OUT SHIFT + : 40.1A
- OUT SHIFT − : 40.1B

These commands are used for adding or subtracting the value of an OUT POINT data, by one frame.

- IN RESET : 40.20
- OUT RESET : 40.21

These commands are used for resetting the value of an IN POINT or an OUT POINT data, which has been stored.

- IN RECALL : 40.24
- OUT RECALL : 40.25

These commands are used for recalling the value, which has been resetting by the "IN RESET : 40.20" or "OUT RESET : 40.21" command, as an IN POINT or an OUT POINT data.

- EDIT PRESET : 41.30

Each bit in the DATA-1 is defined as follows.

DATA-1

Bit-7	6	5	4	3	2	1	0
	INSERT	ASSEMBLE	VIDEO		TIME CODE	AUD-2	AUD-1

INSERT or ASSEMBLE mode is defined by the bit-6 and 5, and each channel is defined by Bit-4 to Bit-0.

- PRE ROLL TIME PRESET : 44.31

These commands are used for presetting the pre roll time, which has given by the DATA-1 to DATA-4, to the DEVICE. As for the data format, refer to "CUE UP WITH DATA : 24.31" command.

- TAPE/AUTO SELECT : 41.33

The TAPE/EE mode is selected by the state of the DATA-1 as follows.

DATA-1
00 : AUTO (TAPE/EE)
01 : TAPE
FF : It depends on the setting of the DEVICE.

- SERVO REFERENCE SELECT : 41.33

The SERVO reference signal is selected by the state of the DATA-1 as follows.

DATA-1
00 : AUTO
01 : EXTERNAL
FF : It depends on the setting of the DEVICE.

- HEAD SELECT : 41.34 (Except for 22 series)

The heads used in the PLAY mode are selected by the state of the DATA-1 as follows.

DATA-1
00 : R/P HEAD
01 : PLAY HEAD
FF : It depends on the setting of the DEVICE.

- COLOR FRAME SELECT : 41.35 (Except for 22 series)

The color frame mode of the servo system is selected by the state of the DATA-1 as follows.

DATA-1
00 : 2 Field
01 : 4 Field
FF : It depends on the setting of the DEVICE.

- TIMER MODE SELECT : 41.36

This command is used for selecting the TIMER system by the state of the DATA-1 as follows.

DATA-1
00 : TIME CODE
01 : CTL COUNTER
FF : It depends on the setting of the DEVICE.

- INPUT CHECK : 41.37

When the DATA-1 is "01", the VIDEO and AUDIO system of the DEVICE will be become to EE mode.

- AUTO MODE OFF : 40.40 (Except for 22 series)
- AUTO MODE ON : 40.41 (Except for 22 series)

This command is used for switching ON/OFF the AUTO mode of the DEVICE.

- VIDEO REFERENCE DISABLE OFF : 40.48
- VIDEO REFERENCE DISABLE ON : 40.49

In the state of PLAY or EE mode of the DEVICE, this command is used for switching ON/OFF the EXTERNAL REFERENCE mode as a SERVO REFERENCE. When the power of the DEVICE is turned on, it will be set to the VIDEO REFERENCE DISABLE OFF.

- TC GEN DATA SENSE : 61.0A

This command is used for requesting the TIME CODE data that the DEVICE is generating, and it will make a response according to the contents of the DATA-1.

DATA-1

Bit-7	6	5	4	3	2	1	0
...	...	...	GEN UB	...	...	...	GEN TC

DATA-1=01 : Request for GEN TC → "GEN TIME DATA : 74.08" Respond
DATA-1=10 : Request for GEN UB → "GEN UB DATA : 74.09" Respond
DATA-1=11 : Request for GEN TC & UB → "GEN TC & UB DATA : 78.08" Respond

- CURRENT TIME SENSE : 61.0C

This command is used for requesting the TIME DATA or USER BIT, and the DEVICE will make a response according to the contents of DATA-1.

DATA-1

Bit-7	6	5	4	3	2	1	0
…	…	VITC UB	LTC UB	…	CTL COUNTER	VITC TIME	LTC TIME
M S D				L S D			

Request command DATA-1 Response command	01	02	03	04	10	20	30	11	22	33
74.00 : CTL COUNTER DATA				○						
74.04 : LTC TIME DATA	○		○							
74.14 : LTC INTERPOLATED TIME DATA	○		○							
74.05 : LTC U-BIT DATA					○		○			
78.04 : LTC TIME & U-BIT DATA								○		○
78.14 : LTC INTERPOLATED TIME & U-BIT DATA								○		○
74.06 : VITC TIME DATA		○	○							
74.16 : VITC INTERPOLATED TIME DATA		○	○							
74.07 : VITC U-BIT DATA						○	○			
78.06 : VITC TIME & U-BIT DATA									○	○
78.16 : VITC INTERPOLATED TIME & U-BIT DATA									○	○

- IN DATA SENSE : 60.10
- OUT DATA SENSE : 60.11

These commands are used for requesting the IN ENTRY DATA or OUT ENTRY DATA, and the DEVICE will make a response according to the contents of DATA-1. As for the data format, refer to "CUE UP WITH DATA : 24.31" command.

- STATUS SENSE : 61.20

This command is used for requesting the status of the DEVICE, and the DEVICE will send back a response command "STATUS DATA : 7X.20" according to the contents of DATA-1 of the CONTROLLER.

MSD (Bit7~4) : Indicates the initial DATA No. of the "7X.20 : STATUS DATA" to be sent back.

LSD (Bit3~0) : Indicates the number of data bytes in "7X.20 : STATUS DATA" to be sent back.

EX. When the DATA-1 is "33".

The DEVICE will send back three bytes from the DATA No.3, i.e. DATA No.3 to DATA No.5 of the "7X.20 : STATUS DATA".

BR-S822E/622E/522E STATUS DATA

BIT DATA	BIT-7	BIT-6	BIT-5	BIT-4	BIT-3	BIT-2	BIT-1	BIT-0
DATA-0			CASSETTE OUT			HARD ERROR		LOCAL
DATA-1	STANDBY ON	TENSION RELEASE	STOP	EJECT	REW	F.FWD	*2 REC	PLAY
DATA-2	SERVO LOCK	TSO	SHUTTLE	JOG	VAR	REV/FWD	STILL	CUE UP COMPLETE
DATA-3	AUTO MODE	FREEZE ON					OUT	IN
DATA-4	*1 SELECT EE ON	*2 FULL EE ON		*2 EDIT	*1 PREVIEW	*1 AUTO EDIT	*1 REVIEW	PREROLL OR CUE UP
DATA-5		*2 INSERT	*1 ASSEMBLE	*1 VIDEO		*1 TIME CODE	*2 AUDIO CH-2	*1 AUDIO CH-1
DATA-6		LAMP STILL	LAMP FWD	LAMP REV				
DATA-7				SYNC ACTIVE				IN~OUT STATUS
DATA-8			NEAR END OF TAPE	END OF TAPE				REC INHIBIT
≀								
DATA-F								

Note *1) This bit does not set to "1" in BR-S622E/522E.
*2) This bit does not set to "1" in BR-S522E.

①DATA-0

- BIT-2 : HARD ERROR

This bit will be set to "1" when tape path system errors occur in the DEVICE.

- BIT-0 : LOCAL

This bit will be set to "1" when the REMOTE switch on the front panel is set to "local".

②DATA-1

- BIT-1 : REC

This bit will be set to "1" when the DEVICE goes into the REC mode, also the "DATA-4/BIT-4 : EDIT" is set to "1".

- BIT-0 : PLAY

This bit will be set to "1" when the DEVICE goes into the PLAY, REC or EDIT mode, also the DEVICE is in the CAPSTAN OVERRIDE mode.

③DATA-2

- BIT-6 : TSO MODE

This bit will be set to "1" when the DEVICE is in the CAPSTAN OVERRIDE mode.

- BIT-3 : VAR

This bit will be set to "1" when the DEVICE is in the VAR or CAPSTAN OVERRIDE mode.

- BIT-2 : TAPE DIRECTION

This bit shows the tape direction of the DEVICE in the STILL or STOP mode.

0 = FWD
1 = REV

- BIT-1 : STILL

This bit will be set to "1" when the DEVICE is in the STOP or STILL of SHUTTLE/JOG/VAR mode.

- BIT-0 : CUE UP COMPLETE

This bit will be set to "1" when the DEVICE receives the PRE ROLL or CUE UP WITH DATA command and then cue-up operation is completed, and it will be set to "0" as soon as the tape starts running.

④DATA-4

- BIT-4 : EDIT

This bit will be set to "1" when the DEVICE is in the EDIT mode, and at the same time, the "DATA-1/BIT-1 : REC" is also set to "1".

- BIT-3 : PREVIEW

This bit will be set to "1" when the DEVICE is in the PREVIEW mode.

- BIT-2 : AUTO EDIT

This bit will be set to "1" when the DEVICE is in the AUTO EDIT mode.

- BIT-1 : REVIEW

This bit will be set to "1" when the DEVICE is in the REVIEW mode.

- BIT-0 : PRE ROLL OR CUE UP

This bit will be set to "1" when the DEVICE goes into the PRE ROLL and CUE-UP modes, also the PRE ROLL is performed in the AUTO EDIT or PREVIEW mode.

⑤DATA-6

- BIT-6, 5, 4 : LAMP STILL, LAMP FWD, LAMP REV

When the DEVICE receives the SEARCH command, the corresponding bit of DATA-6 will be set to "1" according to the direction of the SEARCH command.

⑥DATA-7

- BIT-0 : IN—OUT STATUS

This bit will be set to "1" when the DEVICE is in the PREVIEW or AUTO EDIT mode and the tape is running between the IN POINT and OUT POINT.

- COMMAND SPEED SENSE : 60.2E

This command is used for requesting the tape speed which is been running of the DEVICE, and the DEVICE is send back the "COMMAND SPEED DATA : 71.2E" command with a data.

- TIMER MODE SENSE : 60.36

This command is used for requesting the TIMER mode of the DEVICE. When the DEVICE receives this command, it will send back the "TIMER MODE STATUS : 71.36" with DATA-1 as shown below.

"TIMER MODE STATUS : 71.36" DATA-1 : 00 ··· TIME CODE
01 ··· CTL COUNTER

②RETURN FROM DEVICE

- GEN TC DATA : 74.08

This command is sent back to the CONTROLLER with the TIME data of the TC which the DEVICE is generating. For the data format, refer to the "CUE UP WITH DATA : 24.31".

- GEN UB DATA : 74.09

This command is sent back to the CONTROLLER with the UB data of the TC which the DEVICE is generating. For the data format, refer to the "U-BIT PRESET : 44.05".

- GEN TC & UB DATA : 78.08

This command is sent back to the CONTROLLER with the TIME data and UB data of the TC which the DEVICE is generating that are added to DATA-1 to DATA-4 as a TIME data and DATA-5 to DATA-8 as a UB data. For the data format, refer to the "CUE UP WITH DATA : 24.31" and "U-BIT PRESET : 44.05".

- IN DATA : 74.10

This command is sent back to the CONTROLLER with the IN POINT DATA. For the data format, refer to the "CUE UP WITH DATA : 24.31".

- OUT DATA : 74.11

This command is sent back to the CONTROLLER with the OUT POINT DATA. For the data format, refer to the "CUE UP WITH DATA : 24.31".

- LTC INTERPOLATED TIME DATA : 74.14

When the LTC TIME DATA of the DEVICE is requested, if the data of LTC played back by the DEVICE is corrected by the CTL either or it is read incorrectly, this command will be sent back to the CONTROLLER with the LTC TIME DATA. For the data format, refer to the "CUE UP WITH DATA : 24.31".

- TIMER MODE DATA : 71.36

Refer to the "TIMER MODE SENSE : 60.36" command.

- TIMER-1 DATA : 74.00

This command is sent back to the CONTROLLER with the CTL COUNTER DATA. At this time, the BIT-6 of DATA-1 is set to "1" ("0") when the CTL COUNTER of the DEVICE is set to DF (NDF) mode. For the data format, refer to the "CUE UP WITH DATA : 24.31".

- LTC TIME DATA : 74.04

When the LTC TIME DATA of the DEVICE is requested, if the data of LTC is read correctly and this command is sent back to the CONTROLLER with four data. For the data format, refer to the "CUE UP WITH DATA : 24.31".

- LTC TIME & UB DATA : 78.04

This command is sent back to the CONTROLLER with data which are added to DATA-1 to DATA-4 as a LTC TIME DATA and DATA-5 to DATA-8 as a LTC UB DATA. For the data format, refer to the "CUE UP WITH DATA : 24.31" and "U-BIT PRESET : 44.05".

- LTC UB DATA : 74.05

This command is sent back to the CONTROLLER with the LTC UB DATA. For the data format, refer to the "U-BIT PRESET : 44.05".

- LTC INTERPOLATED TIME & UB DATA : 78.14

When the LTC TIME DATA and UB DATA of the DEVICE is requested, if the data of LTC played back by the DEVICE is corrected by the CTL either or it is read incorrectly, this command will be sent back to the CONTROLLER with data which are added to DATA-1 to DATA-4 as a LTC TIME DATA and DATA-5 to DATA-8 as a LTC UB DATA. For the data format, refer to the "CUE UP WITH DATA : 24.31" and "U-BIT PRESET : 44.05".

- VITC TIME DATA : 74.06

This command is sent back to the CONTROLLER with the VITC TIME DATA. For the data format, refer to the "CUE UP WITH DATA : 24.31".

- VITC TIME & UB DATA : 78.06

This command is sent back to the CONTROLLER with data which are added to DATA-1 to DATA-4 as a VITC TIME DATA and DATA-5 to DATA-8 as a VITC UB DATA. For the data format, refer to the "CUE UP WITH DATA : 24.31" and "U-BIT PRESET : 44.05".

- VITC HOLD TIME DATA : 74.16

When the VITC TIME DATA of the DEVICE is requested if it will be read incorrectly, this command will be sent back to the CONTROLLER with the VITC TIME DATA. For the data format, refer to the "CUE UP WITH DATA : 24.31".

- VITC HOLD TIME & UB DATA : 78:16

When the VITC TIME DATA and VITC UB DATA of the DEVICE are requested if they will be read incorrectly, this command will be sent back to the CONTROLLER with data which are added to DATA-1 to DATA-4 as a VITC TIME DATA and DATA-5 to DATA-8 as a VITC UB DATA. For the data format, refer to the "CUE UP WITH DATA : 24.31" and "U-BIT PRESET : 44.05".

③FORMAT OF TIME DATA

The format of the TIME DATA is used by the "CUE UP DATA : 24.31" command etc. show as follows.

	MSB							LSB
DATA-1	CF	▨	← 10F →		← 1F →			
DATA-2	▨	← 10S →			← 1S →			
DATA-3	▨	← 10M →			← 1M →			
DATA-4	▨	▨	← 10H →		← 1H →			

1. DATA-1/BIT-7 : CF FLAG ("1"CF ON, "0"CF OFF)
When the DEVICE receives the "CURRENT TIME SENSE : 61.0C" command, if the DEVICE has been set to the CF mode and it will be set to "1".

2. The BIT of ▨ mark has no meaning as a TIME DATA.

1.7.5 DETAIL TIMING CHART

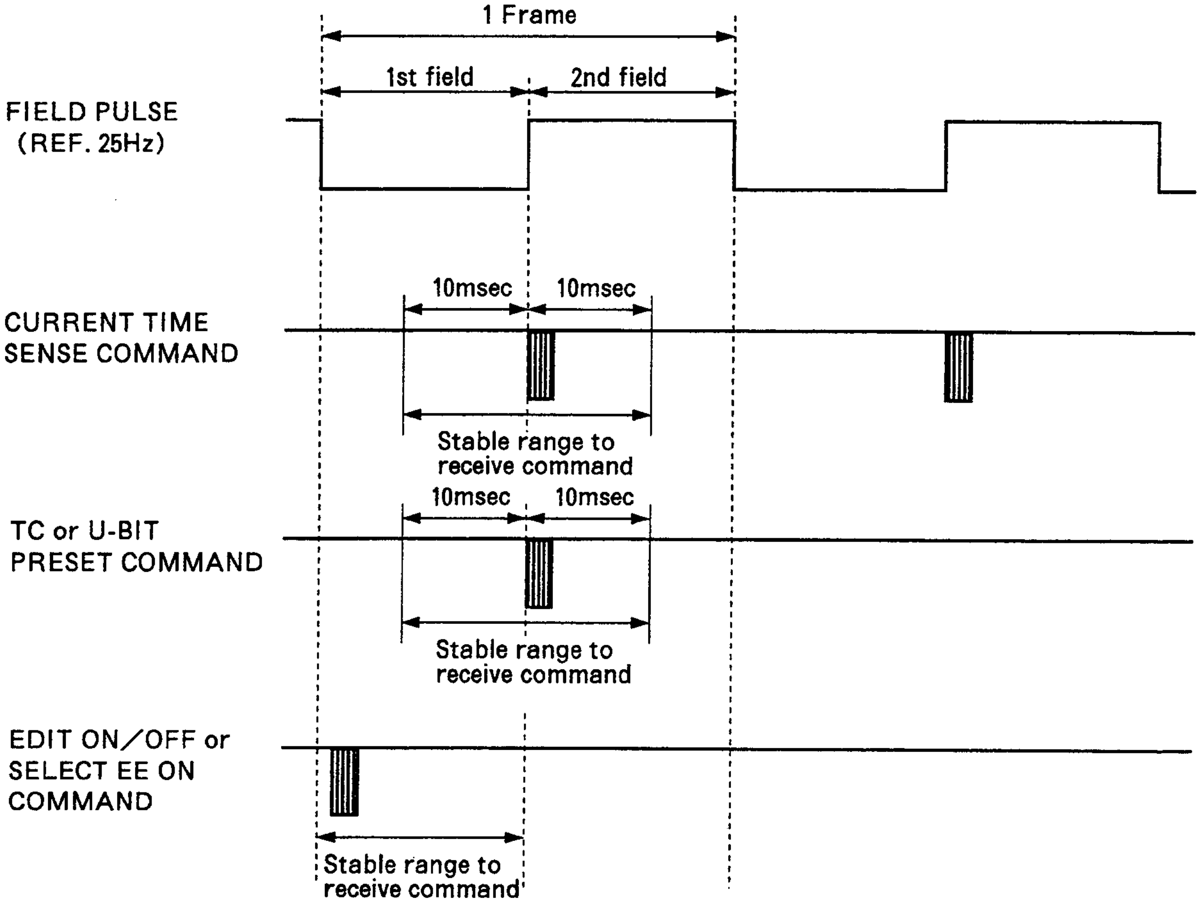
1 Frame
1st field
2nd field
FIELD PULSE
(REF. 25Hz)
10msec
10msec
CURRENT TIME
SENSE COMMAND
Stable range to
receive command
10msec
10msec
TC or U-BIT
PRESET COMMAND
Stable range to
receive command
EDIT ON/OFF or
SELECT EE ON
COMMAND
Stable range to
receive command

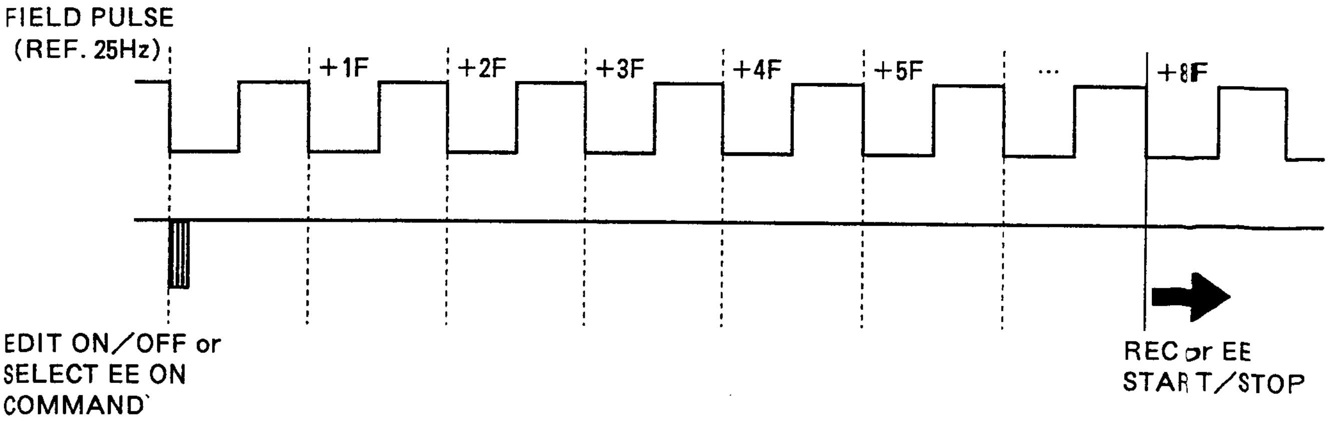
FIELD PULSE
(REF. 25Hz)
+1F
+2F
+3F
+4F
+5F
...
+8F
EDIT ON/OFF or
SELECT EE ON
COMMAND
REC or EE
START/STOP

1.8 WIDE ASPECT ID

1.8.1 Necessity of wide aspect ID

Signal such as D2-MAC whose aspect ratio is 16 : 9 can be recorded by ordinary VTR if it is converted to PAL signal by decoder. To play back a tape on which such converted signal is recorded, the recorded signal must be expanded by TV set to reproduce picture in the aspect ratio of 16 : 9. For this operation, TV set is required to switch the aspect ratio corresponding to reception signal, however, WIDE ASPECT ID signal solves this problem because it enables TV set to switch switches the aspect ratio automatically.

The 22 series VTR has the function to record and play back WIDE ASPECT ID signal. If it is used in combination with TV set capable of discriminating WIDE ASPECT ID signal, it is also capable of automatic switching between 16 : 9 wide aspect picture and 4 : 3 ordinary aspect picture.

1.8.2 Wide aspect ID

Wide aspect ID is recorded on the CTL track by CTL coding. However, in the VHS format which uses CTL codes for VISS and VASS systems, a particular method compatible with these systems is adopted for discriminating the wide aspect as mentioned below.

For VISS and VASS, "1" and "0" pulses are defined by modulating CTL pulse width in wide deviation as shown in Fig. 1-8-1. For wide aspect ID, additional modulation of these pulses in narrow deviation takes place within the tolerance to define "L" and "S" pulses, too. When "L" and "S" pulses are alternately recorded every two frames, it indicates the wide aspect ratio of 16 : 9.

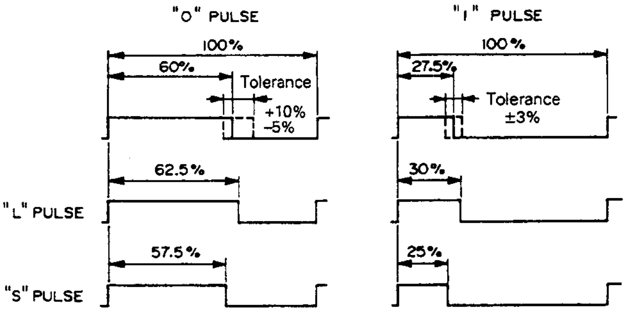

Fig. 1-8-1 Duty ratio of CTL pulse

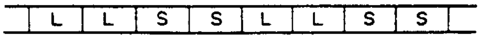

Fig. 1-8-2 Wide aspect ID

1.9 ADJUSTMENT MODE

To set to the Adjustment Mode, depress the COUNTER RESET button, the FF button and the REW button while pressing the POWER switch to ON. The counter displays "········· 88 ·········" and the set enters the "Adjustment Mode 0".

To select an adjustment mode, turn the JOG dial to change the mode. Turning off the power cancels the adjustment mode.

Kinds of the adjustment modes with details are shown in the following table.

Adjustment Mode	Counter Display	Description	Adjustment Item
1	········· 0 1 ·········	Normal Audio CH-1 is set to REC mode.	Not used in the adjustment procedures.
2	········· 0 2 ·········	Normal Audio CH-2 is set to REC mode.	
3	········· 0 3 ·········	Both channels of Normal Audio are set to REC mode.	
4	········· 0 4 ·········	Tracking VR function is cancelled.	Used for X value adjustment (2.6.5)
5	········· 0 5 ·········	Drum and capstan rotate.	Not used in the adjustment.
6	········· 0 6 ·········	Enters to RAP mode.	Used for video circuit adjustment. (3.4)
7	········· 0 7 ·········	CTL signal is recorded.	Not used in the adjustment.
8	········· 0 8 ·········	Not used	
≀	≀		
2 4	········· 2 4 ·········		

SECTION 2
MECHANISM ADJUSTMENT

2.1 GENERAL DESCRIPTION

2.1.1 Precautions

1. Before use of a soldering iron, make sure to disconnect the power cord of the set from the outlet.
2. Do not pull connector cables strongly for disconnecting connectors.
3. Do not disturb VRs and other adjusting parts with a trouble of unknown origin.
4. When inserting a cassette tape into the set, place the set correctly horizontally. Under the circumstances that the set is laid on its side or its rear, or upside down, insertion of a cassette may damage the cassette housing.

2.1.2 Mechanism operation check

For operating the mechanism with the cassette housing removed, proceed to do the following steps.

1. Disconnect the power cord of the set from the outlet.
2. Remove the cassette housing from the set and disconnect the connector CN1 of the CASSETTE HOUSING board.
3. Shortcircuit pin 3 and pin 5 of the connector cable with each other.
4. Set a cassette tape with its door open on the main deck and turn on the power while selecting an operation mode with operation buttons.

2.1.3 Jigs and special tools for mechanism adjustment

The following jigs and special tools are necessary for adjusting the mechanism.

Alignment tapes MHPE, MBPE-2, MBAE, MBAE-3, MBPE-X	Cassette torque meter PUJ42881/PUJ42881B	Parallel check plate PGJ04035 (0.05)/ PUJ50204 (0.1)	Height gauge PGJ04032
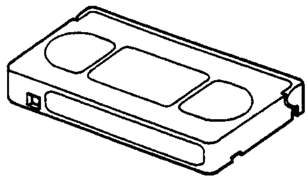	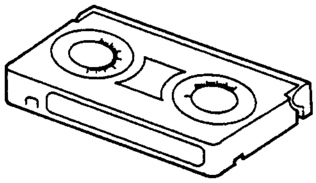	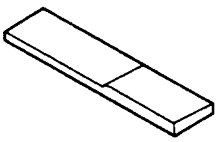	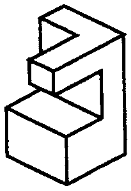
Taper nut driver PUJ50637	Tension pole mechanism positioning jig PGJ04031	Microchecker PUJ49712-2	Hex. driver PGJ04034 (2 mm)
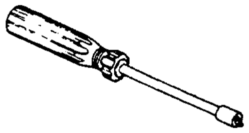	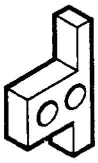	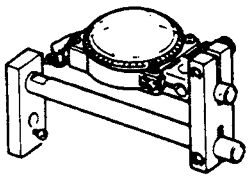	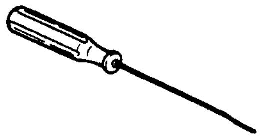
Line head wrench PGJ04033	Guide arm height adjustment driver PGJ04036		
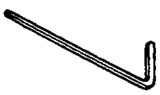	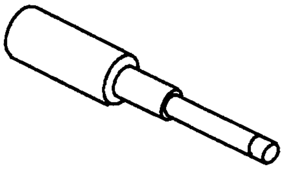		

● General tools required besides above special tools

- Nut driver (7 mm)
- Hex. keys (1.27 mm, 2 mm)
- Ordinary (+) screwdrivers [PGJ04037(3 mm), PGJ04038(2.6 mm)]
- Spacer (0.1 mm)

Table 2-1-1

2.2 PERIODIC REPLACEMENT OF MAIN PARTS

Periodic inspection and maintenance are needed in order to ensure the original performance and reliability of the set.
The following table shows just standard periods according to general and average use. In actual, each period will widely differ from the standard depending on environmental and usage conditions.

If inspection and maintenance work of the following items are improperly performed, it not only shortens the service period and the life of the parts but also gives bad influence on the set as a whole. Also be aware that rubber parts may deform and age even when the set is new and not used for a long time. The service life of the upper drum is particularly affected by environmental and usage conditions.

System	No.	Part Name	Part Number	Standard service period* (operation housrs)				Ref. Sect.	Remark
				1000	2000	3000	4000		
Tape trans-port system	①	Supply guide shaft	—	★	★	★	★	—	
	②	Tension arm ass'y	PQ45314A-2	★	★	★	●	2.3.9	
	③	Supply guide roller	PRD43721A					2.7.2	
	④	Full erase head	PU60616					—	
	⑤	Supply pole base ass'y	PRD30821B					2.3.15	
	⑥	Supply inertia roller	PGZ01667					2.3.4	Not included in Drum ass'y
	⑦	Take-up inertia roller	PGZ01667-02					2.3.4	Not included in Drum ass'y
	⑧	Take-up pole base ass'y	PRD30864A-01					2.3.15	
	⑨	A/C head	PGZ01536A					2.3.7	Excluding A/C Head board
	⑩	Take-up guide pole Upper flange Lower flange	PRD43733 PRD43732 PRD43670-01-01					2.7.3	
	⑪	Guide arm roller ass'y	PRD43404D					2.7.4	
	⑫	Capstan shaft	—	★	★	★	★	—	
	⑬	Pinch roller arm ass'y	PRD43387A-01	○	●	○	●	2.3.10	
	⑭	Drum ass'y	PDV2273B	★	★	○	●	2.3.6	For check, see 2.3.6.
	⑮	Upper drum ass'y	PRD20380C-1	●	●	●	●	2.3.4–5	Included in Drum ass'y
Drive system	⑯	Capstan motor	PGZ01535-01-01				●	2.3.11	
	⑰	Reel motor	PGZ01541A-04				●	2.3.12	Assembled part
	⑱	Loading motor	PRD44016A				●	2.3.13	
	⑲	Loading belt	PRD30022-12 PRD30022-16	●	●	●	●	2.3.13	Motor side worm gear side
	⑳	Cassette motor	PQ45489A				●	2.3.2	
	㉑	Supply main brake	PRD43388A		●		●	2.3.14	
	㉒	Take-up main brake	PRD43395A		●		●	2.3.14	
	㉓	Take-up sub brake	PRD43479A		●		●	2.3.14	
Others	㉔	Brush ass'y (A)/(B)	PRD43986A/B		●		●	2.3.3	Included in Drum ass'y
	㉕	Slip ring ass'y	PGZ01630	○	●	○	●	2.3.4	Included in Drum ass'y
	㉖	Head cleaner	PRD40510-01-02	●	●	●	●	—	Not included in Drum ass'y

* Know the standard service time by the drum's hour meter. For the capstan motor and the reel motor, perform service according to respective hour meters.

★ : Cleaning
○ : Check and Replace if necessary, or Check and Clean.
● : Replacement

2.2.1 Location of main parts

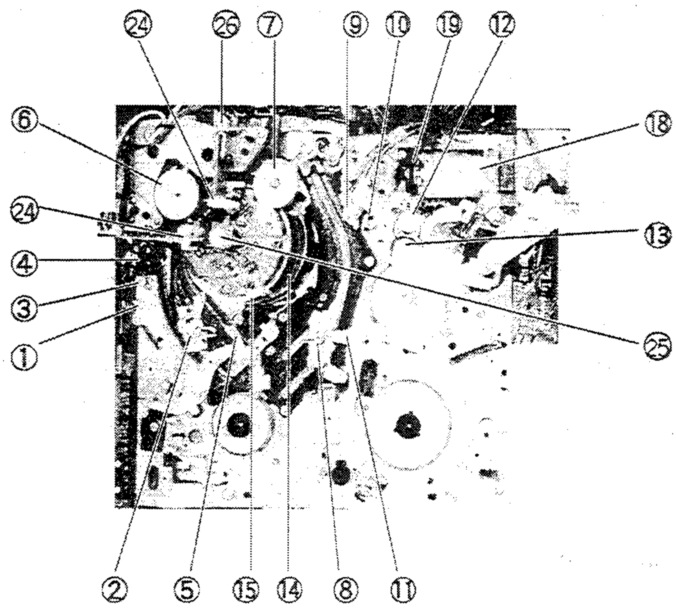
㉔
㉖
⑦
⑨
⑩
⑲
⑫
⑥
⑱
㉔
⑬
④
③
①
㉕
②
⑤
⑮
⑭
⑧
⑪

Fig. 2-2-1

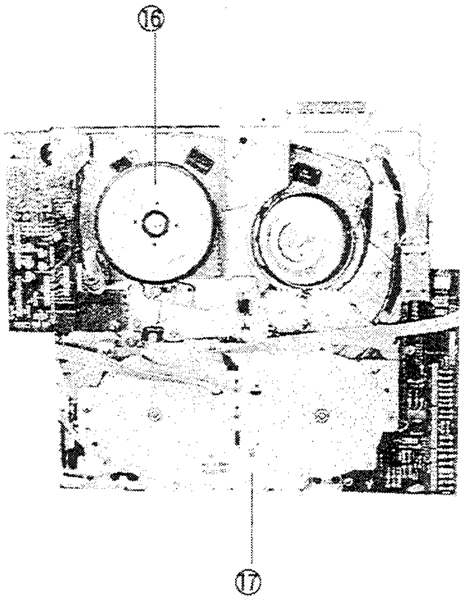

Fig. 2-2-2

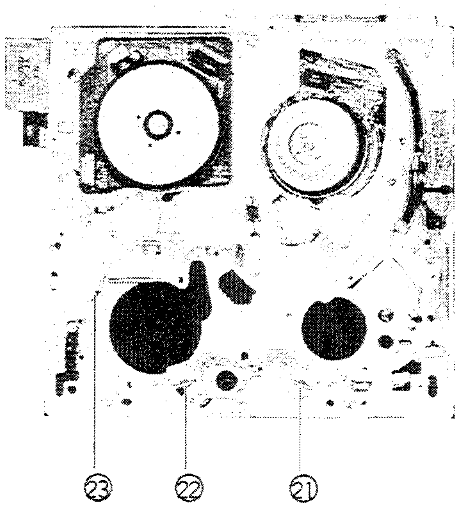

Fig. 2-2-3 (Reel motor is removed.)

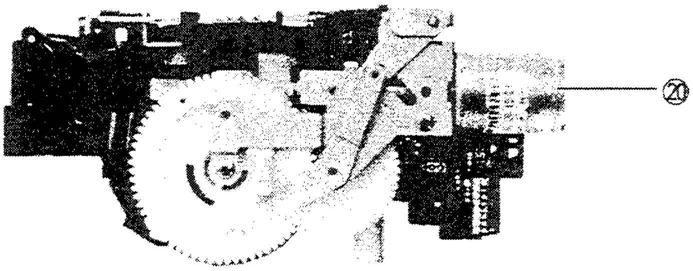

Fig. 2-2-4

2.2.2 Cleaning

Although periodical cleaning of the tape transport system is required, it is almost impossible to put it into practice. Therefore, it is strongly recommended to clean the tape transport system when a set is brought in for repair, etc.

For cleaning, use fine wooven cotton cloth moistened with ethyl alcohol.

1. Dirty video head causes rough playback picture and non picture reproduction in the extreme case.
   For cleaning video heads, lightly press the cloth to the upper drum by finger while turning the upper drum.
   ***Note:** Since the video head is weak against vertical force (applied in up-down direction), movement of cloth may possibly damage it.*
2. Dirty tape guide not only increases video heads in getting dirty much more but also damages tapes.
3. Dirty and dusty brush causes snow noise in playback picture.
   For cleaning the brush show as follows.
   ***Note:** It is not necessary to clean up the slip ring.*
   ① Remove the brush assemblies (A) and (B). (Refer to section 2.3.3.)
   ② Clip the brush, use fine wooven cotton cloth moistend with ethyl alcohol.
   ③ Pull out the brush from cloth movement of cloth may possible damage brush.
   ④ After cleaning the brush, reassemble the brush assemblies (A) and (B) refering to the section 2.3.3.

2.2.3 Oiling and greasing

Periodical oiling and greasing are not required, but new parts need them when they replace old ones. If oil or grease on the other party is old, wipe it off and apply new oil or grease.

1. Oil and grease used in this set are as follows.

Item	Name	JVC Part No.
Oil	Cosmo Hydro HV56	COSMO-HV56
– General spindle oil (low viscosity) is substitutable –		
Grease	Moriton Grease (Black)	MOS2-C
	Fuloil G-31KAV (Light Blue)	KANTO-G31KAV

2. Grease the control cam every 2000 hours of operation.
3. For other parts, apply grease to them every 4000 hours of operation or on parts replacement.

2.3 REPLACEMENT OF MAIN PARTS

Note: For parts replacement, remove external covers, P. C. boards, cassette housing, etc. as required.

No.	Item	Adjustment and Check

1 **Cassette housing assembly**

With change of the installation method of the cassette housing in the middle of production of this set, the mechanism assembly and the cassette housing assembly have been altered partially since then. Under those circumstances, the cassette housing assembly of the old type cannot be installed to the new mechanism assembly, however, the new cassette housing assembly can be installed to the old mechanism assembly.
The following table shows respective models' serial numbers from which the new mechanism assembly is installed.

Model	BR-S822E	BR-S622E
Serial No.	#825 and after	#918 and after

- **Difference to distinguish between old and new mechanism assemblies:**

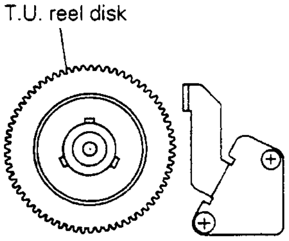

Old mechanism

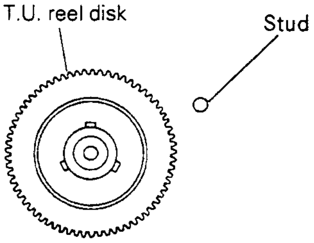

New mechanism

1-1 **In case of Old mechanism assembly**

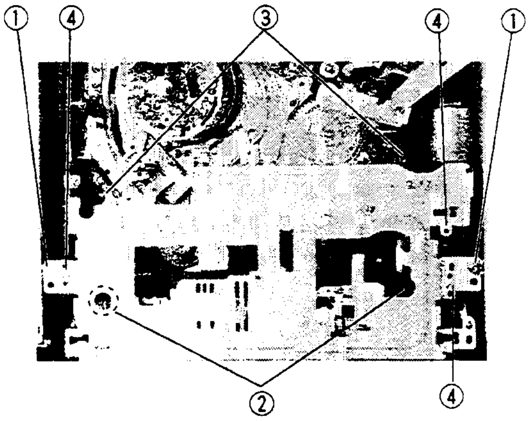

Fig. 2-3-1 (Housing cover is removed)

Screw ①	Screws ②, ③
 7–9 kg-cm	② Brass color ③ Black 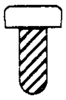 2.5–4 kg-cm

1) Remove the cassette panel ass'y (see 1.1.2).
2) Remove the cassette housing cover.
3) Remove two screws ③.
4) Insert a cassette tape and push it in just before the cassette holder goes down (see Fig. 2-3-2). Then, take out the cassette tape in that condition.
5) Remove two screws ② and two screws ①.
6) Raise the cassette housing and disconnect the housing connector while removing the cassette housing.

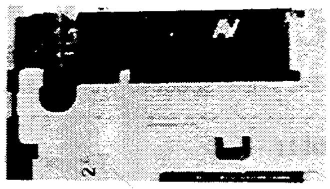

Fig. 2-3-2

<table>
<tr><th>No.</th><th>Item</th><th>Adjustment and Check</th></tr>
<tr><td>1-2</td><td>

In case of New mechanism assembly

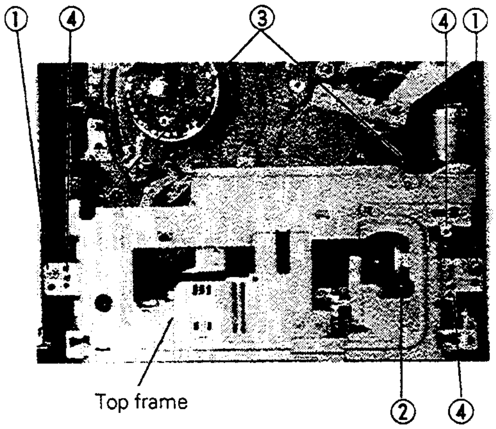
①
④
③
④
①
Top frame
②
④

Fig. 2-3-3 (Housing cover is removed)

<table>
<tr><th>Screw ①</th><th>Screws ②, ③</th></tr>
<tr><td>

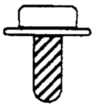

7–9 kg-cm</td><td>

② Brass color
③ Black

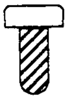

2.5–4 kg-cm</td></tr>
</table>

</td><td>

1) Remove the cassette panel ass'y (see 1.1.2).
2) Remove the cassette housing cover.
3) Remove two screws ①, one screw ② and two screws ③.
4) Push the cassette housing toward the drum once and raise it with the hook disengaged to disconnect the housing connector while removing the cassette housing.

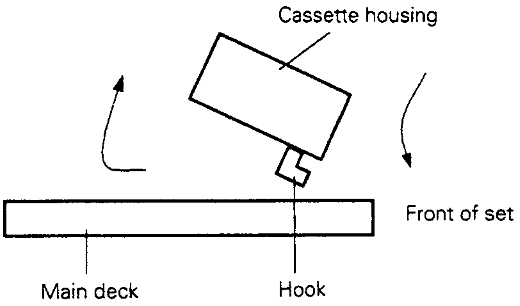
Cassette housing
Front of set
Main deck
Hook

</td></tr>
<tr><td>2</td><td>

Cassette housing motor

– Removal –

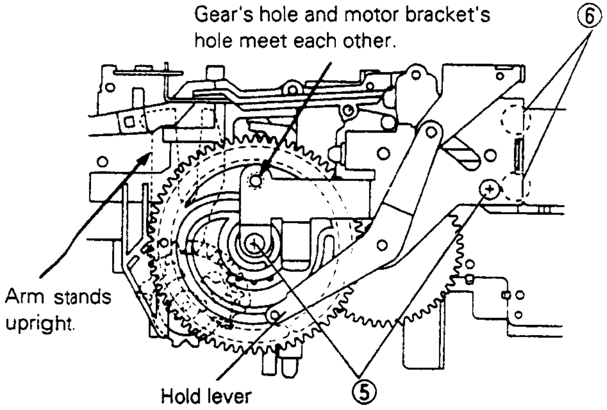
Gear's hole and motor bracket's hole meet each other.
⑥
Arm stands upright.
Hold lever
⑤

Fig. 2-3-4 (Perspective view of assembly position)

</td><td>

1) Remove the cassette housing ass'y.
2) Set the cassette housing to the assembly position (in which the holes of the motor bracket and the gear coincide with each other) as shown in Fig. 2-3-4.
3) Remove the hold lever after removing patching.
4) Remove three screws ④ (see Fig. 2-3-3) and remove the top frame.
5) Remove two screws ⑤ and remove the cassette motor together with the motor bracket.
6) Remove two screws ⑥ and unsolder wires. Then, the cassette motor can be removed.

</td></tr>
<tr><td></td><td>

– Reinstallation –

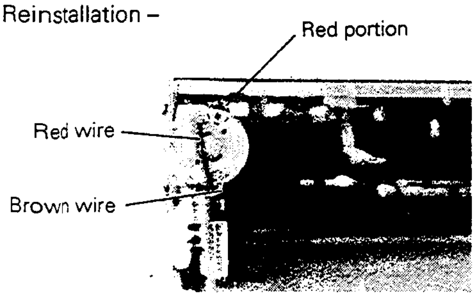
Red portion
Red wire
Brown wire

Fig. 2-3-5 Wiring of motor

</td><td>

1) Reinstall the cassette motor and peripheral parts in the reverse order of removal referring to Fig. 2-3-5.
2) When reassembling the motor bracket to the cassette housing, pay attention to the phase of the gear.

</td></tr>
</table>

No.	Item	Adjustment and Check

3 In this model, power supply control signal and PRE/REC amp. control signal are supplied to the PRE/REC board from the brush. If either of installation and the contact pressure of the brush is incorrect, picture may not be played back.

Brush assembly

– Removal –

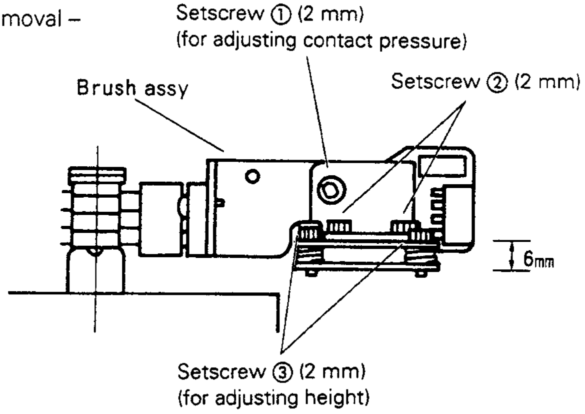
Setscrew ① (2 mm)
(for adjusting contact pressure)
Brush assy
Setscrew ② (2 mm)
6mm
Setscrew ③ (2 mm)
(for adjusting height)

Fig. 2-3-6

- Required tool : Hexagon key (2 mm)

1) Disconnect connectors from the brush ass'y (A) and (B).
2) Loosen the setscrew ① to remove bending in the brush.
3) Remove two screws ② and detach the brush ass'y (A).
4) Remove the brush ass'y (B) in the same manner.

– Reinstallation –

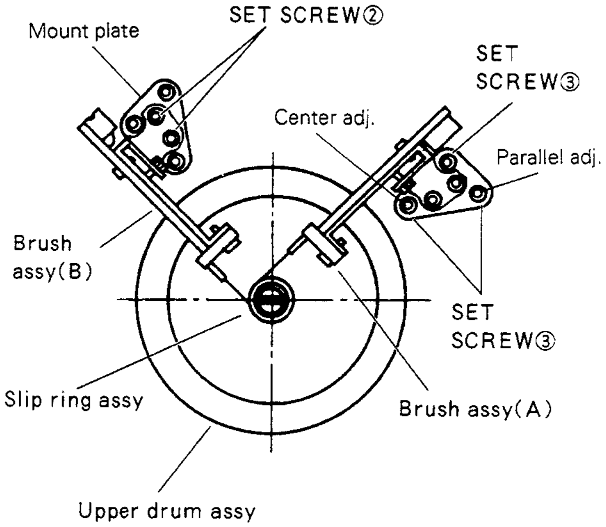
Mount plate
SET SCREW②
SET SCREW③
Center adj.
Parallel adj.
Brush assy(B)
SET SCREW③
Slip ring assy
Brush assy(A)
Upper drum assy

Fig. 2-3-7

1) First of all, reinstall the brush assembly (A).
2) Confirm that the mount plate is positioned just 6 mm apart from the brush base as shown in Fig. 2-3-6.
3) Adjust the position of the brush so that its tip slightly contacts the slip ring, and tighten the setscrews ② to fix the brush.
4) Confirm that the brush is positioned in the center of the groove of the slip ring and parallel with the slip ling.
5) If not, adjust as follows.
   a) Loosen the setscrews ②.
   b) Set the bursh as its tip is positioned approximately 1 mm apart from the slip ring, and tighten the setscrew ②.
   c) Adjust the setscrews ③ so that the brush is positioned in the center of the slip ring's groove and in parallel with the slip ring.
   d) Loosen the setscrew ② and tighten the setscrews ② as the tip of the brush slightly contacts the slip ring.
6) As the brush's tip is in slight contact with the slip ring, turn the setscrew ① clockwise at an angle of 90° +45°.

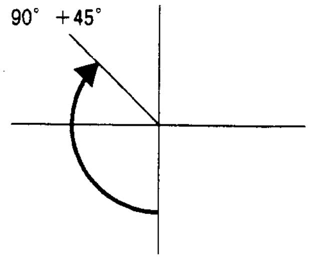

Fig. 2-3-8

7) In the same manner as above, reinstall the brush assembly (B).

No.	Item	Adjustment and Check
4	**Upper drum assembly** – Removal – 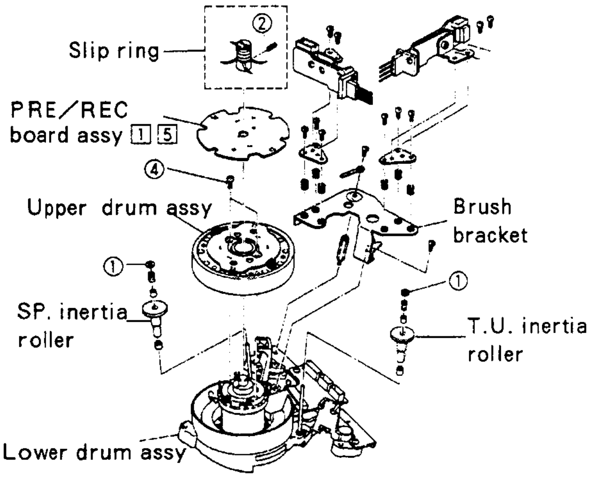 Slip ring ② PRE/REC board assy 1 5 ④ Upper drum assy ① SP. inertia roller Brush bracket ① T.U. inertia roller Lower drum assy **Fig. 2-3-9** 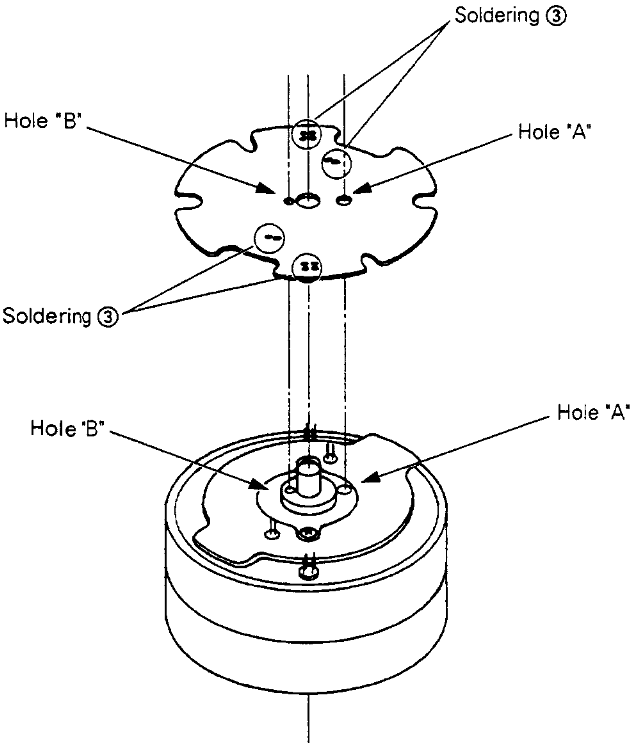 Soldering ③ Hole "B" Hole "A" Soldering ③ Hole "B" Hole "A" **Fig. 2-3-10**	• Required tool : Hexagon keys (1.27 mm, 2 mm) 1) Remove the brush assemblies (A) and (B) referring to 2.3.3. 2) Remove the head cleaner ass'y. 3) Remove the slit washer ① and the inertia rollers with care not to lose springs, etc. *Note: When the slit washer is removed once, replace it with new one (Part No. PQM30017-25).* 4) The next procedure will differ depending on the circumstances whether the slip ring needs to replace or not. – When slip ring needs to replace – 4-1) Disconnect four wires (red, orange, yellow and black) that are soldered to the PRE/REC board from the slip ring, then, loosen the setscrews ② (1.27 mm) while removing the slip ring. – When slip ring need not replace – 4-2) Loosen the setscrews ② (1.27 mm) and proceed to do the next step 5) to remove together with the PRE/REC board. 5) Unsolder the PRE/REC board by the four points (shown by ③ in figure) and remove the board. *Note: If it is tried to remove the PRE/REC board with incomplete unsoldering or with too much heating for unsoldering, the lower drum's pin may drop out of it. In that event, replace the drum ass'y as a whole.* 6) Unsolder at four points inside the UPPER DRUM board. 7) Remove two screws ④ and detach the upper drum ass'y.

No.	Item	Adjustment and Check
	– Reinstallation – 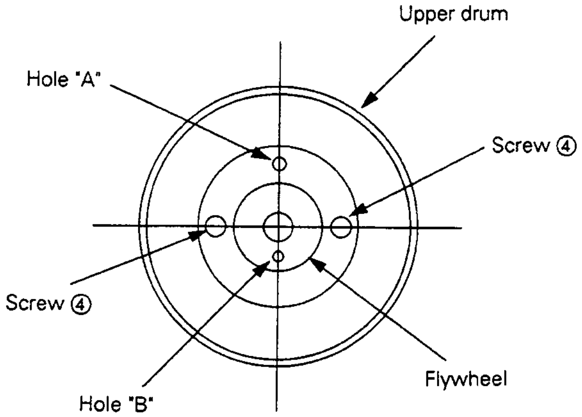 Upper drum Hole "A" Screw ④ Screw ④ Flywheel Hole "B" **Fig. 2-3-11** – Check and Adjustment – 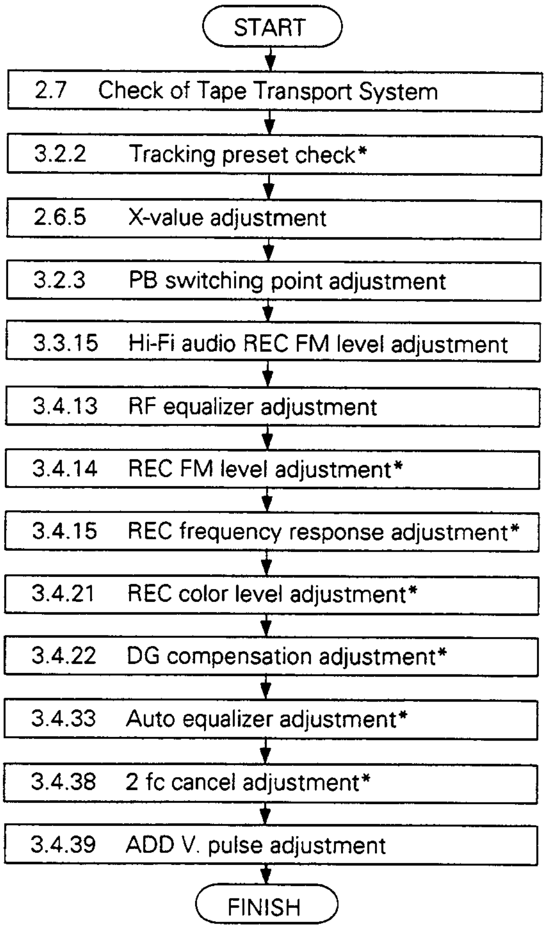 START 2.7 Check of Tape Transport System 3.2.2 Tracking preset check* 2.6.5 X-value adjustment 3.2.3 PB switching point adjustment 3.3.15 Hi-Fi audio REC FM level adjustment 3.4.13 RF equalizer adjustment 3.4.14 REC FM level adjustment* 3.4.15 REC frequency response adjustment* 3.4.21 REC color level adjustment* 3.4.22 DG compensation adjustment* 3.4.33 Auto equalizer adjustment* 3.4.38 2 fc cancel adjustment* 3.4.39 ADD V. pulse adjustment FINISH * BR-S522E need not these adjustments.	1) Clean both the contact surfaces of the upper drum ass'y and the lower drum ass'y with alcohol. 2) Assemble the upper drum ass'y to the lower drum assy so that the upper drum's hole "A" (ø 2.7) and the flywheel's hole "B" (ø 1.6) are oppositely positioned at an angle of 180°. At that time, tighten the screw ④ with a torque of 4.5~5.0 kg-cm. 3) Check wobbling of the upper drum in the rim (see 2.3.5). 4) After confirming no wobble in the upper drum movement, solder the UPPER DRUM board. 5) Assemble the PRE/REC board to the drum ass'y so that the holes "A" and "B" of the PRE/REC board overlap the holes "A" and "B" mentioned in the above step 2) respectively, and solder the board (see Fig. 2-3-10). 6) The next procedure will differ depending on the circumstances whether the slip ring is replaced or not. – When slip ring is replaced – 6-1) Install the slip ring and tighten the setscrew. Then solder four wires (red, orange, yellow and black) as specified. – When slip ring is not replaced – 6-2) Confirm that the slip ring is correctly installed, and tighten the setscrew to fix it. 7) Install the brush assemblies (see 2.3.3). 8) After the above steps, proceed to the "Check and Adjustment" mentioned in the left column.

No.	Item	Adjustment and Check
5	**Centering of upper drum (To remove upper drum wobbling in the rim)**	

If the upper drum is installed being deviated from the center of the drum shaft, it causes jitter, etc.
After replacement of the upper drum, if it was done, make sure to confirm no wobbling in the upper drum's rim.

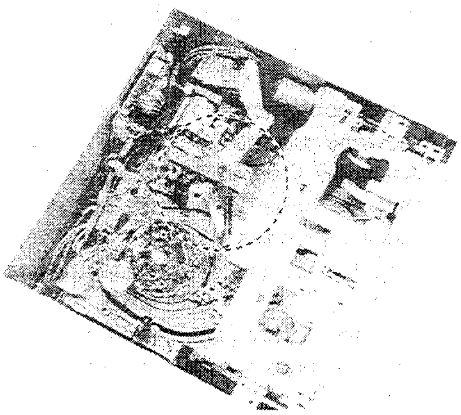

Fig. 2-3-12

• Cautions to handle microchecker

1) Keep the microchecker out of any shock or strong vibration since it is a high precision instrument.
2) Do not apply unnecessary force to the measuring probe.
3) Although the outer rim of the micrometer is turnable in a range of ±10 graduations, do not turn it with strong force (more than 300 gr-cm).
4) Be careful not to touch the microchecker with heads, particularly with the video heads.
5) On setting the microchecker, make sure that the working direction of the measuring probe points at the center of the upper drum.
6) If rubbing or grating sound occurs in measuring, it results from incorrect setting or abnormal contact of the microchecker. Confirm that there is no dust and other contamination on the upper drum and tip of the measuring probe.

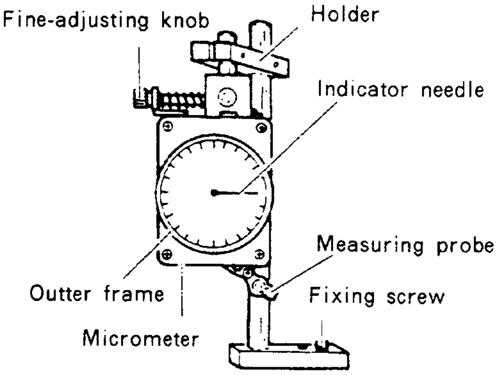

Microchecker PUJ49712-2

Note:For centering the upper drum, a setscrew (SDSP2610Z) is necessary besides a microchecker.

1) Set the operation mode to the C. cassette mode and turn off the power switch.
2) Prepare a microchecker and remove its hex. head screw from the base.
3) Set the microchecker holder at the position shown in Fig. 2-3-12 and fix it with a setscrew (SDSP-2610Z).
4) Set the micrometer with care not to knock it against the upper drum.
5) Slowly turn the fine adjustment knob of the microchecker clockwise until the pointer reads "0". Pointer adjustment is possible by turning the outer ring of the micrometer, but it must be within ±10 graduations.
   To apply the microchecker to the drum ass'y, place it between the 4th and 5th grooves of the drum from the top.
6) Turn the upper drum gently (with a paper string, for instance) with care not to apply lateral pressure to it. If the pointer deflects, it must be for ±1 micron at maximum.
7) When the pointer deflection exceeds ±1 micron, turn the fine adjustment knob counterclockwise and remove the measuring probe from the upper drum. Loosen two screws retaining the upper drum while adjusting its position slightly, and tighten the screws again.
8) Check the pointer deflection again. If it is still out of the limit, repeat the above step until deflection becomes within ±1 micron.
9) After deflection is confirmed allowable, turn the fine adjustment knob counterclockwise and remove the microchecker.
10) Turn on the power switch and set the operation mode to the Full Cassette mode.
11) Connect an oscilloscope's probe to the front service terminal "V-RF", and play the MHPE alignment tape.
12) Turn the oscilloscope's tracking VR while confirming that CH-1 FM waveform and CH-2 FM waveform are maximized at the same time.
13) When the waveforms greatly differ from each other, remove the upper drum and clean both of the upper drum's lower surface and the upper surface of the lower drum's flywheel. After cleaning, repeat the above steps 1) through 12).
14) If waveforms are still unsatisfactory after the above adjustment, it is recommended to replace the drum ass'y.

No.	Item	Adjustment and Check
6	**Drum assembly** 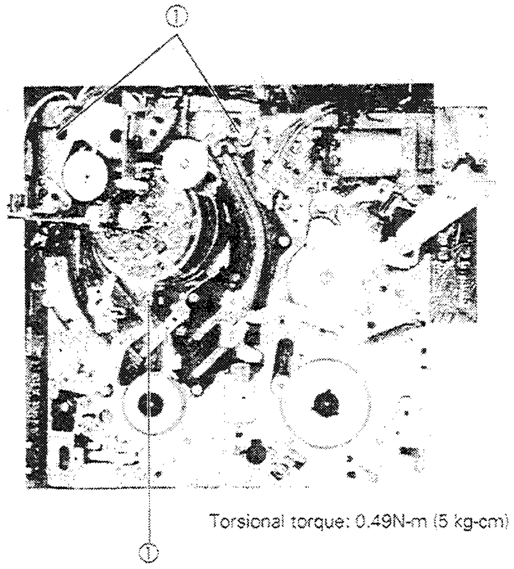 **Fig. 2-3-13**	*Note: When holding the drum ass'y, do not catch it by the brush ass'y.* *For replacing the pole base, do it after removing the drum ass'y.* 1) Referring to Fig. 2-3-9, remove the slit washer ①, then remove the inertia rollers. 2) Remove the head cleaner ass'y. 3) Remove three screws ① and disconnect connectors while removing the drum ass'y for replacing. 4) Reassemble the inertia rollers. 5) After the replacement, check and adjust according to the flowchart in page 2-9.
	– Reference – Before replacing drum assembly 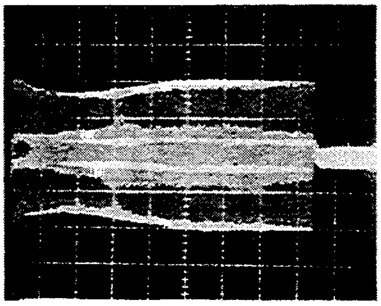 Tracking center 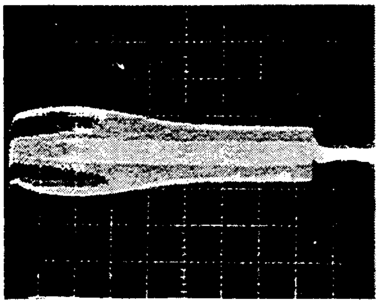 Tracking (–)	1) Connect an oscilloscope's probe to the front service terminal "V-RF" and input D-PULSE to the oscilloscope for external triggering. 2) With the MBPE-2 alignment tape being played back, turn the oscilloscope's tracking control while observing the FM waveform. 3) When such waveforms as shown in the figures are observed, they indicate that drum leads are worn. In that event replace the drum ass'y. 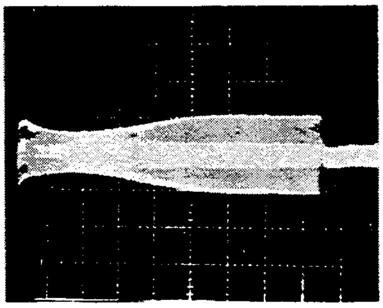 Tracking (+)

No.	Item	Adjustment and Check
7	**A/C head** – Replacement – 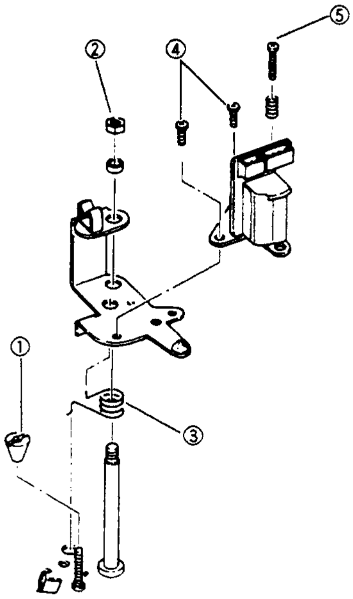 **Fig. 2-3-14**	- Required tools · Taper nut driver (PUJ50637) · Nut driver (7 mm) 1) Disconnect connectors from the A/C HEAD board. 2) Remove the taper nut ① for X value adjustment. 3) Remove the nut ② and detach the A/C head together with the head base with care not to lose the spring ③ positioned underneath. Also pay attention to the spacer under the nut not to lose it. 4) After removing two screws ④ and a screw ⑤, take the A/C head out of the main deck. At that time, be careful not to lose the spring. 5) Remove soldering from the A/C head and replace it.
	– Installation – 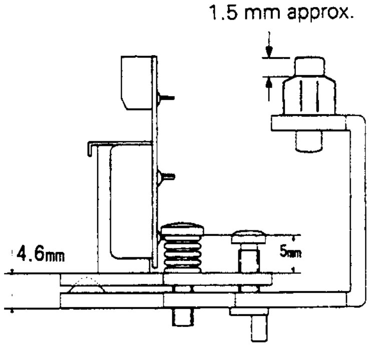 **Fig. 2-3-15**	1) Before reassembling the A/C head to the main deck, temporarily adjust its height as shown in the figure. 2) Reassemble the A/C head and its peripheral parts to the main deck in the reverse order of disassembling. 3) On setting the taper nut, adjust the height as shown in the figure below. 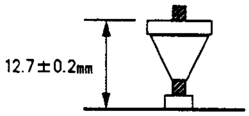
	– Check and Adjustment –	*Note: Before confirming normal tape transport, do not use any alignment tape to prevent it from damag. Make sure to check tape transport with an ordinary recording tape beforehand.* *After confirming normal tape transport, perform the following checks and adjustments.* 1) A/C head adjustment (see 2.6.4) 2) Tape transport check (see 2.7) 3) X value adjustment (see 2.6.5) 4) FM waveform check (see 2.6.2) 5) Electrical adjustments for audio circuit (see 3.3) • PB level (3.3.2) • PB frequency response (3.3.3) • REC/PB level (3.3.5)* • REC/PB frequency response (3.3.6)* • Cross talk cancel (3.3.9)* * BR-S522E need not these adjustments.

No.	Item	Adjustment and Check
8	**Mechanism assembly** 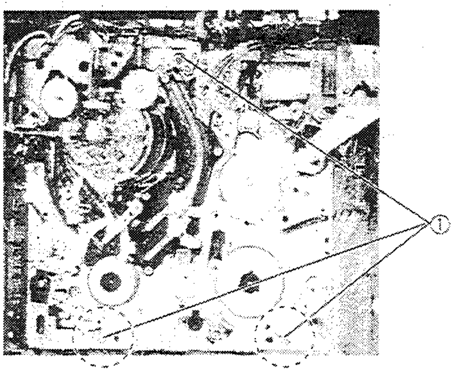 Fig. 2-3-16	1) Remove the cassette housing ass'y (see 2.3.1). 2) Remove three screws ①. 3) Disconnect all connectors from the mechanism ass'y. 4) Hold up the mechanism ass'y and disconnect connectors from the lower drum ass'y while removing the mechanism ass'y. 5) When reinstalling the mechanism ass'y, make sure to insert specified collars. *Note: IF any collar was not set in the specified portion, insert two collars (Part No. PRD44048) in the screw holes bordered by broken lines respectively.*
9	**Tension arm assembly** – Removal – 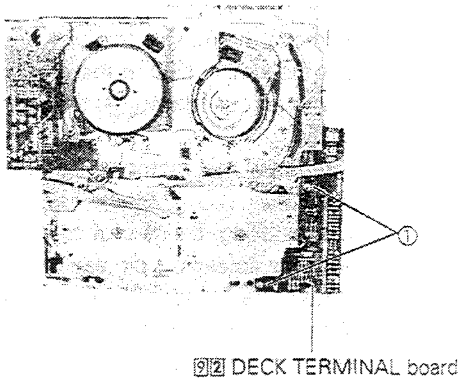 Fig. 2-3-17	1) Remove the mechanism assy (see 2.3.8). 2) Remove two screws ① and remove the DECK TERMINAL-2 board. 3) Remove the slit washer ② and lift the tension arm ass'y upward to remove it (see Fig. 2-3-18). *Note: When the slit washer is removed once, replace it with new one (Part No. PQM30017).*
	– Reinstallation – 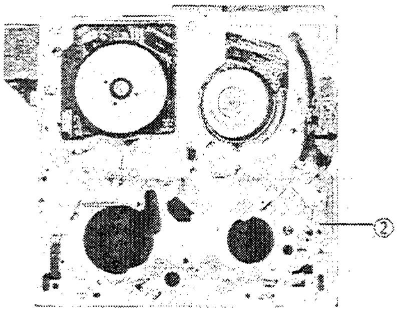 Fig. 2-3-18	1) Reassemble the tension arm ass'y and its peripheral parts to the main deck in the reverse order of removing. 2) After reinstalling or replacing the tension arm ass'y, adjust and check the following items. a) Tape transport system adjustment (see 2.7) b) Reel servo circuit adjustment (see 2.5)
10	**Pinch roller arm assembly** 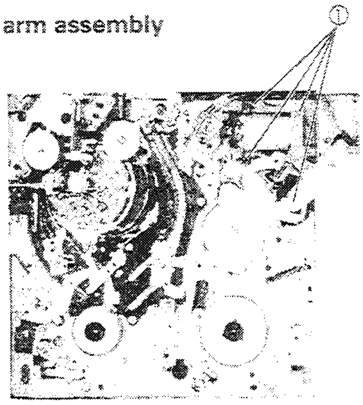 Fig. 2-3-19	*Note: For removing the motor bracket, set the operation mode to the C. cassette mode.* 1) Remove four screws ① and remove the motor bracket. 2) Lift the pinch roller arm ass'y upward to remove it. 3) For installing the pinch roller arm assy, pay careful attention to the phase of respective gears referring to the item No. 1 of "2.4 Assembling of Mechanism".

No.	Item	Adjustment and Check
11	**Capstan motor** 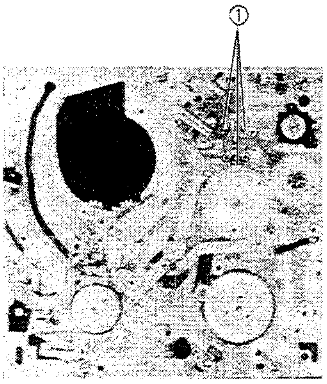 **Fig. 2-3-20**	1) Remove the mechanism ass'y (see 2.3.8). 2) Remove the pinch roller arm ass'y referring to 2.3.10. 3) Remove three screws ① and disconnect connectors. Then, remove the capstan motor. 4) When the capstan motor is replaced, check and adjust the capstan FG duty ratio and the level (see 3.2.1).
12	**Reel motor** 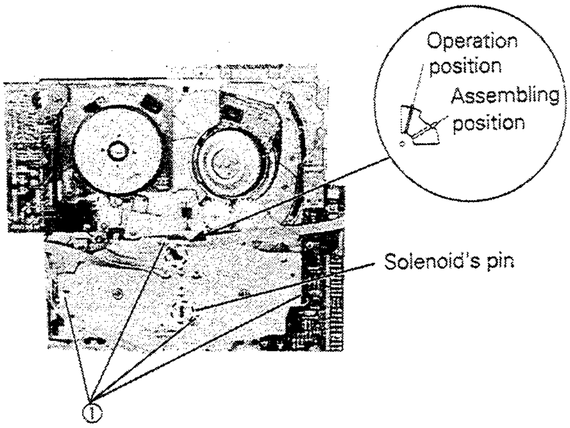 Operation position Assembling position Solenoid's pin ① **Fig. 2-3-21**	1) Remove the mechanism assy (see 2.3.8). 2) Set the sensor LED to the assembling position. 3) Remove four screws ①, then remove the reel motor ass'y. 4) Set a new reel motor sensor LED to the assembling position. 5) On installing, be careful to engage the brake lever with the solenoid's pin exactly. 6) Return the sensor LED to the operation position. 7) When the reel motor ass'y is replaced, check and adjust the reel FG duty (see 2.5.5).
13	**Loading motor** 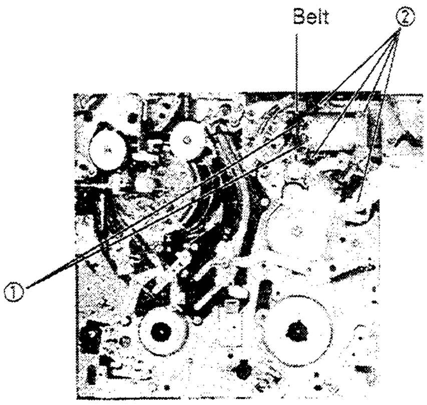 **Fig. 2-3-22**	1) Disengage the drive belt from the motor pulley and remove it. 2) Remove two screws ① and remove the loading motor. If it is hard to remove it, remove four screws ② and the motor bracket, too.

No.	Item	Adjustment and Check
14	**Main brake, T.U. sub brake** Condition that reel motor is removed 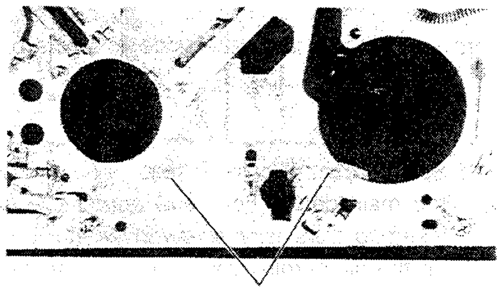 Slit washer: PQM30017-6 **Fig. 2-3-23**	1) Remove the mechanism ass'y (see 2.3.8). 2) Remove the reel motor (see 2.3.12). 3) Remove the slit washer, then remove the main brake and sub brake. *Note: When the slit washer is removed once, replace it with new one (Part No. PQM30017-6).* 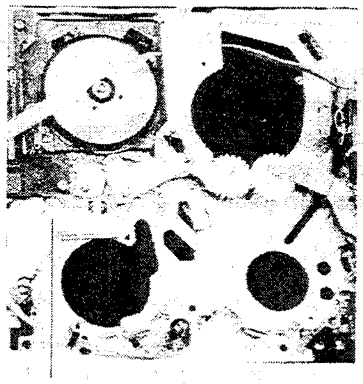 Slit washer: PQM30017-6 **Fig. 2-3-24**
15	**Pole base assembly** Stopper : PRD43471 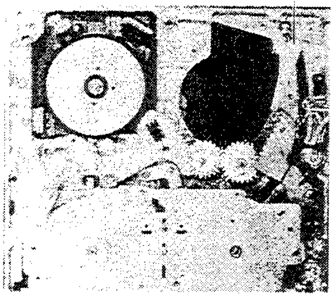 **Fig. 2-3-25** ① SDSP2608M 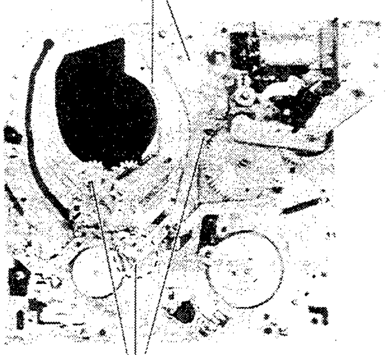 ② SDSP2608M **Fig. 2-3-26**	1) Remove the mechanism ass'y (see 2.3.8). 2) Remove the drum ass'y (see 2.3.6). 3) Supply pole base 3-1) Turn the loading motor counterclockwise to set the mechanism to the loading end position. 3-2) After removing the stopper, lift the pole base ass'y upward while removing it. 4) Take-up pole base 4-1) Remove the A/C head ass'y. 4-2) Remove two screws ① and three screws ②, then take the loading ass'y (T.U.) away. When removing the screws ②, be careful not to lose spacer. 4-3) Remove two stoppers ③ and lift the pole base ass'y upward to remove it. *Note: When the stoppers are once removed, replace them with new ones.* 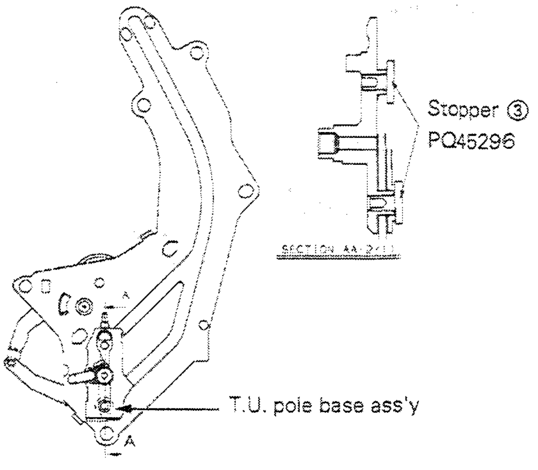 Stopper ③ PQ45296 T.U. pole base ass'y **Fig. 2-3-27**

2.4 ASSEMBLING OF MECHANISM

No.	Item	Adjustment and Check
	In the mechanism of this model, there is a close relation between the rotary encoder and the mechacon circuit. Namely, operations of the mechanism parts are determined by rotational angle of the rotary encoder, in detail, cam gear's rotational angle. If there is something installed abnormally in these mechanism parts, it causes malfunction of the mechanism. Assembling of mechanism parts of this model must be performed in the C. cassette mode (the pole base assy is returned to the utmost reel side).	
1	**Cam gear** **Pinch roller cam** **Pinch roller** **Control cam** **Guide arm gear** 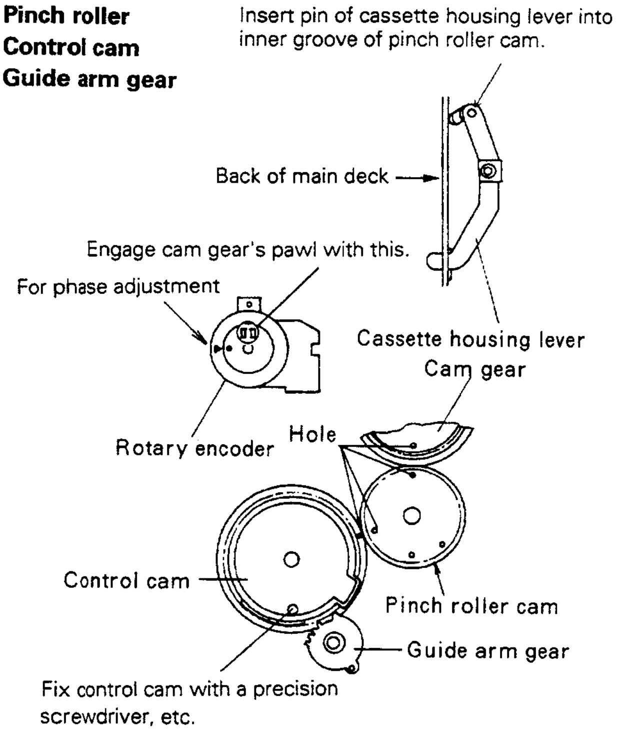 Insert pin of cassette housing lever into inner groove of pinch roller cam. Back of main deck Engage cam gear's pawl with this. For phase adjustment Cassette housing lever Cam gear Rotary encoder Hole Control cam Pinch roller cam Guide arm gear Fix control cam with a precision screwdriver, etc. Fig. 2-4-1	1) Set the control cam so that its hole coincides with the main deck's hole, and temporarily fix them by inserting a precision screwdriver, etc. 2) Fit the pinch roller cam together with its hole being positioned as shown in Fig. 2-4-1. At that time, insert the pin of the cassette housing lever into the inner groove of the pinch roller cam. 3) Fit the pinch roller together. 4) After adjusting the phase of the rotary encoder, engage the cam gear with care of its phase. • Working points a) Fix the control cam with a precision screwdriver, etc. to prevent it from rotating. b) Make sure to insert the pin of the cassette housing lever into the inner groove of the pinch roller cam. c) Fit the cam gear's pawl into the dimple of the rotary encoder.
2	**Loading gear (S)** **Loading gear (T)** **Cancel lever** **Arm gear** 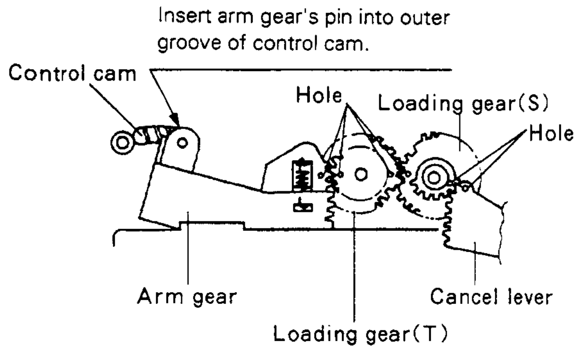 Insert arm gear's pin into outer groove of control cam. Control cam Hole Loading gear(S) Hole Arm gear Cancel lever Loading gear(T) Fig. 2-4-2	1) Assemble the supply loading gear and the take-up loading gear to the main deck as respective gear holes of the two face each other. 2) Engage the cancel lever and the arm gear with them as their holes face the holes of the loading gears respectively. • Working point a) When engaging the arm gear, turn the control cam clockwise as viewed from the deck's back side (in other words, turn the loading motor counterclockwise) so that the arm gear's pin is put in the outer groove of the control cam.

No.	Item	Adjustment and Check
3	**Mechanism parts arrangement** 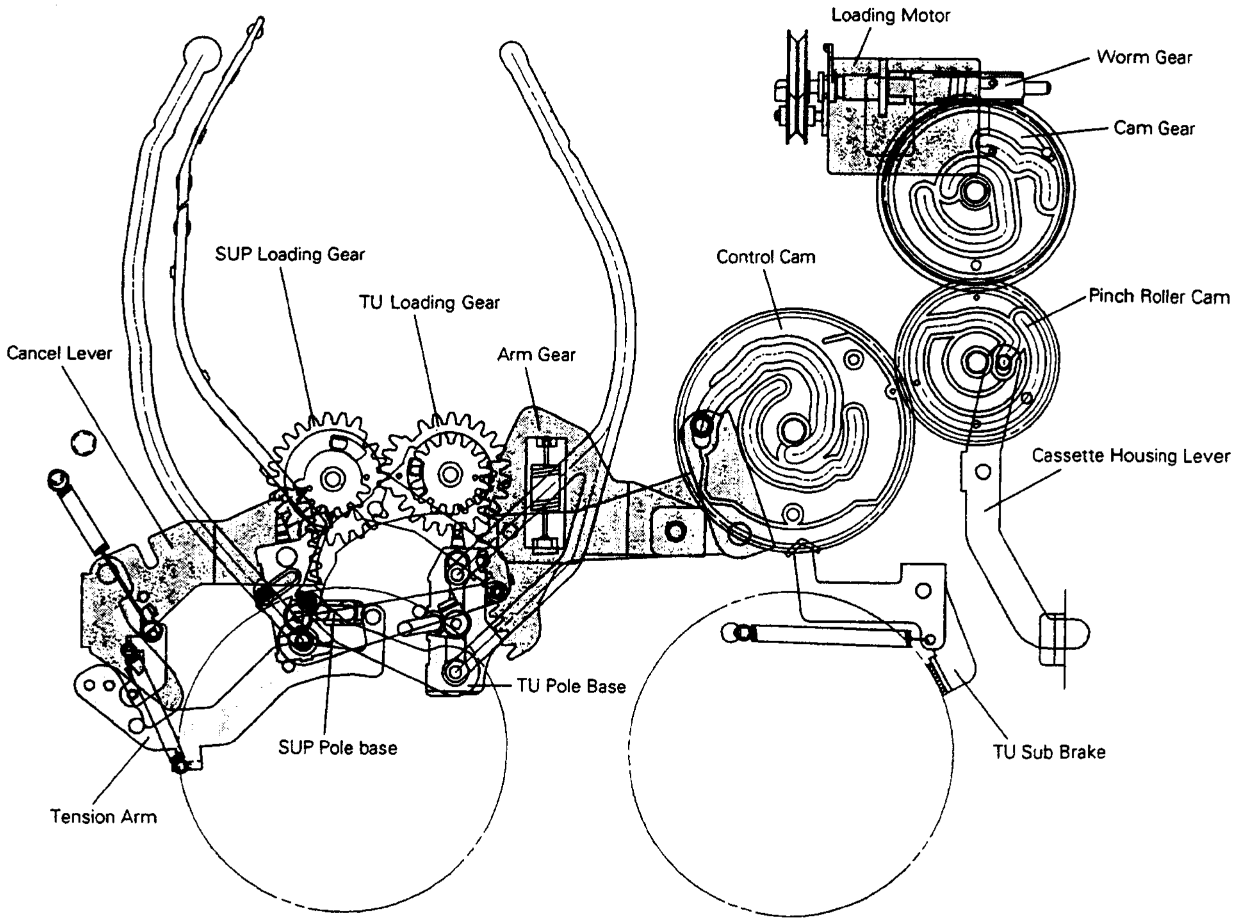 Loading Motor Worm Gear Cam Gear Control Cam Pinch Roller Cam SUP Loading Gear TU Loading Gear Cancel Lever Arm Gear Cassette Housing Lever TU Pole Base SUP Pole base TU Sub Brake Tension Arm **Fig. 2-4-3**	

2.5 ADJUSTMENT OF REEL SERVO CIRCUIT

Note: Before proceeding to adjust this item, make sure that the "Tension poly perpendicularity (vertical centering) check" (2.7-5) is correctly adjusted.

No.	Item	Adjustment and Check
	Note: 1. Setting back of the cassette torque meter must be performed in the Search (X10) mode, otherwise it may be damaged. Do not do it in the FF/REW mode and the Reel Search mode. *2. In the middle of loading torque adjustment, pressing SW2 varies torque by 2 g-cm at each pressing.* *3. If the cassette torque meter reaches the tape end or the tape beginning in the middle of adjustment, repeat it from 1) of the following adjustment steps.* *4. In the following description, all test points and adjustment parts are located on $\boxed{3}\boxed{1}$ M. CTL & R. SERVO board unless otherwise specified.* *5. Location map of test points and adjustment parts is printed in page 2-19.*	
1	**Tension sensor position** 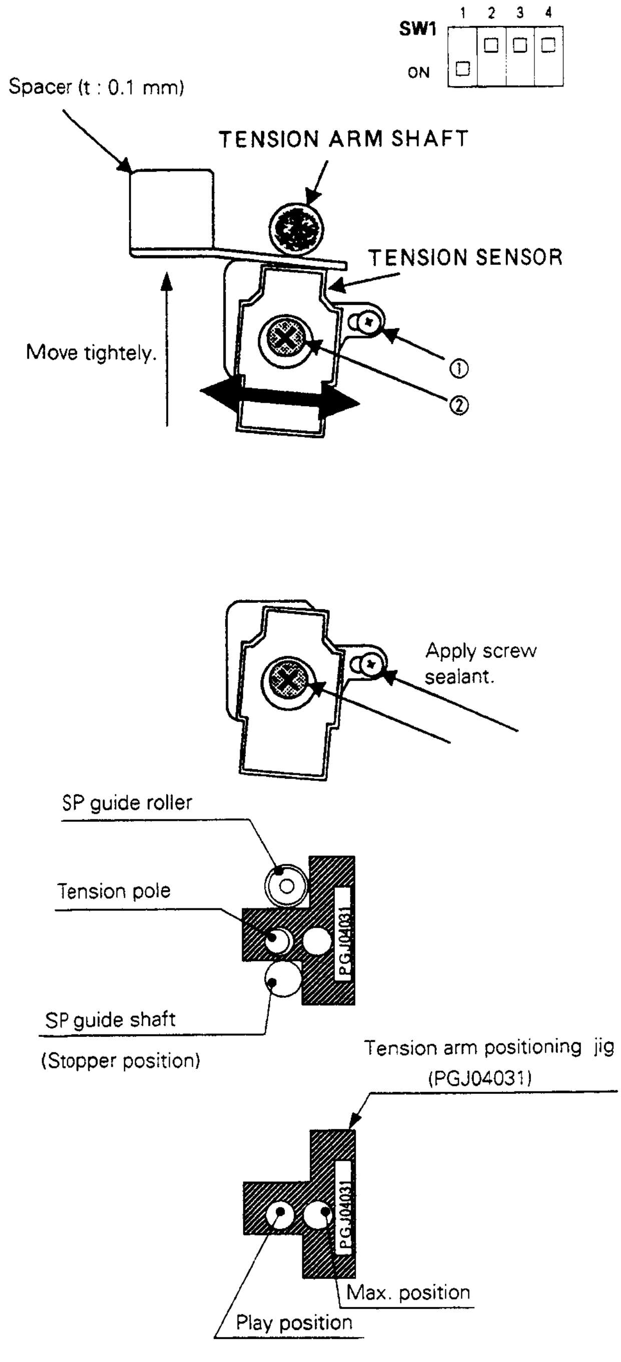 1 2 3 4 SW1 ON Spacer (t : 0.1 mm) TENSION ARM SHAFT TENSION SENSOR Move tightely. ① ② Apply screw sealant. SP guide roller Tension pole PGJ04031 SP guide shaft (Stopper position) Tension arm positioning jig (PGJ04031) PGJ04031 Max. position Play position **Fig. 2-5-1**	• Required jigs: · Spacer (0.1 mm thick) or, PRD40300 (earth plate on the sub-deck of BR-S811 type) · Tension arm positioning jig (PGJ04031) 1) Turn off the power once and remove the cassette housing. After setting SW1 as shown on the left, again turn on the power. 2) The mechanism is in the loading end stop mode. 3) Loosen the setscrew ① and move the base of the tension sensor in the direction of the arrow → to the extent. Then tighten the setscrew ①. 4) Loosen the setscrew ② slightly. 5) Insert a spacer of 0.1 mm thick between the tension sensor and the tension arm shaft as shown in the figure, and adjust the position of the tension sensor so that the gap between the tension sensor and the tension arm shaft is 0.1 mm. After adjustment, tighten the setscrew ②. 6) Remove the spacer and connect a digital voltmeter to TP6 to measure output voltage. Take note of the data as V1. 7) Set the tension pole to the "MAX" position of the tension arm positioning jig, and measure the output voltage. Take note of this result as V2. 8) Change the setting position of the tension arm positioning jig to the "PLAY" and measure the output voltage (V3). Confirm that V3 meets the following specifications. $V3 \leqq 0.581 \cdot V1 + 0.419 \cdot V2$ $V3 \geqq 0.681 \cdot V1 + 0.319 \cdot V2$ 9) If not, proceed as follows. a) If out of the upper limit, loosen the setscrew ① and move the hall element leftward. b) If out of the lower limit, loosen the setscrew ① and move the hall element rightward. c) In either case, the gap between the tension sensor and the tension arm shaft must be 0.1 mm. 10) Again check the above steps 6) through 8). 11) After confirming the results satisfactory, apply screw sealant to the setscrews ① and ②. 12) On completion of the above procedure, check and adjust the following items. a) Hall element output bias voltage (see 2.5.2) b) Hall element output gain (see 2.5.3) c) Play mode back tension (see 2.5.6) d) Reverse (x1) torque (see 2.5.7) e) Tension warning data setting (see 2.5.8)

No.	Item	Check Point	Adjustment Parts	Signal & Mode	Adjustment and Check
Arrangement of test points and VRs 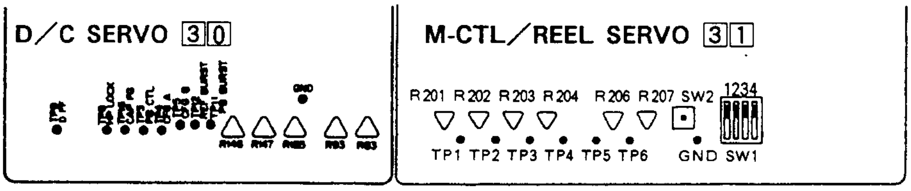 D/C SERVO 30 LOCK BURST BURST GND R147 M-CTL/REEL SERVO 31 R201 R202 R203 R204 R206 R207 SW2 1234 TP1 TP2 TP3 TP4 TP5 TP6 GND SW1					
2	**Hall element output bias**	TP6	R206 (TENS BIAS)	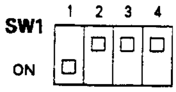 	1) Turn off the power once. Set SW1 as shown on the left and again turn on the power. 2) The mechanism is in the loading end stop mode. 3) Connect a digital voltmeter to TP6 and adjust R206 so that the voltmeter reads 0 ± 0.05 V. Take note of this result as V1. 4) Set all switches of SW1 to OFF and turn off the power again. 5) After the above steps, check and adjust the following items. a) Hall element output gain (see 2.5.3) b) Play mode back tension (see 2.5.6)
3	**Hall element output gain** 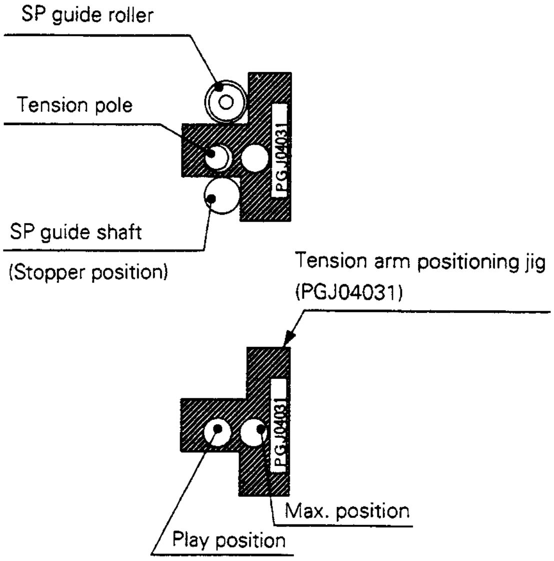 SP guide roller Tension pole SP guide shaft (Stopper position) Tension arm positioning jig (PGJ04031) PGJ04031 PGJ04031 Max. position Play position **Fig. 2-5-2**	TP6	R207 (TENS GAIN)	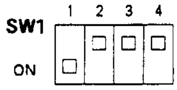 	• Required jig : Tension arm positioning jig (PGJ04031) 1) Turn off the power once. Set SW1 as shown on the left and turn on the power again. 2) Set the tension pole to the "MAX" position of the tension arm positioning jig. 3) Connect a digital voltmeter to TP6 and adjust R207 so that the voltmeter reads as follows. V1 + 5 ± 0.05 V (V1: voltage at the stopper position) 4) Set all switches of SW1 to OFF and turn off the power again.

No.	Item	Check Point	Adjustment Parts	Signal & Mode	Adjustment and Check
4	**Loading torque** According to the following flowchart, adjust loading torque in the C. cassette mode first, then, check loading torque in the F. cassette mode. For torque adjustment, press SW2 to increase torque by 2 g-cm approximately at a time.				

- Required instrument:
  Cassette torque meter PUJ42881

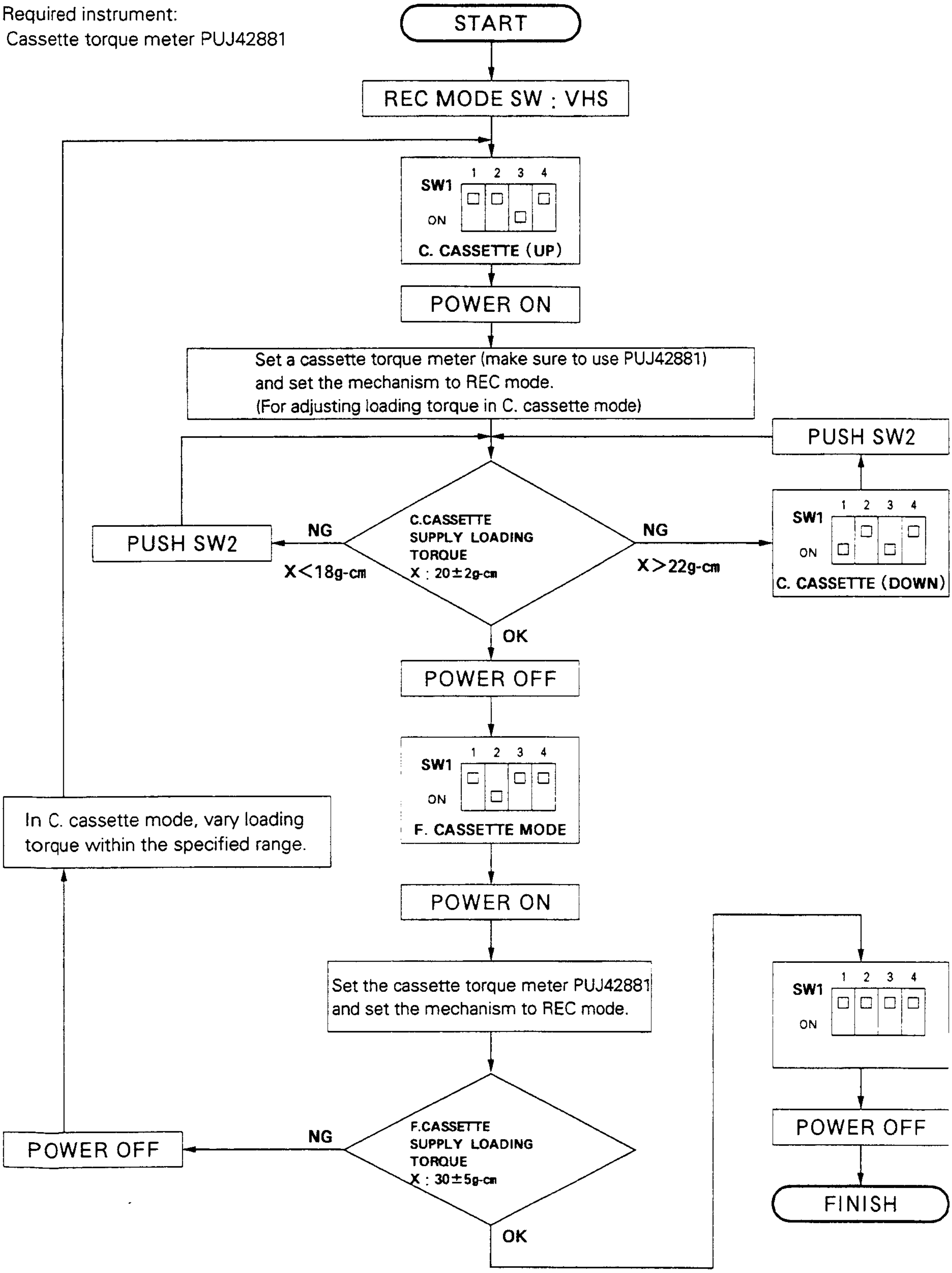
START
REC MODE SW : VHS
SW1 1 2 3 4
ON
C. CASSETTE (UP)
POWER ON
Set a cassette torque meter (make sure to use PUJ42881) and set the mechanism to REC mode. (For adjusting loading torque in C. cassette mode)
PUSH SW2
C.CASSETTE SUPPLY LOADING TORQUE X : 20±2g-cm
NG
X<18g-cm
PUSH SW2
NG
X>22g-cm
SW1 1 2 3 4
ON
C. CASSETTE (DOWN)
OK
POWER OFF
SW1 1 2 3 4
ON
F. CASSETTE MODE
In C. cassette mode, vary loading torque within the specified range.
POWER ON
Set the cassette torque meter PUJ42881 and set the mechanism to REC mode.
F.CASSETTE SUPPLY LOADING TORQUE X : 30±5g-cm
NG
POWER OFF
OK
SW1 1 2 3 4
ON
POWER OFF
FINISH

No.	Item	Check Point	Adjustment Parts	Signal & Mode	Adjustment and Check
5	**Reel FG duty**	TP1 (SP FGA) TP2 (SP FGB) TP3 (TU FGA) TP4 (TU FGB)	R201 (SP FGA) R202 (SP FGB) R203 (TU FGA) R204 (TU FGB)	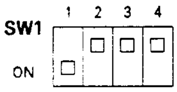	1) Turn off the power once, and set SW1 as shown on the left. Again turn on the power and the mechanism enters the adjusting mode. 2) Connect an oscilloscope to TP1. 3) Adjust R201 so that the duty ratio becomes 50 ± 5 %. 4) Perform the same adjustment with other TPs. 5) Set all switches of SW1 to OFF and turn off the power again.
6	**Play mode back tension**	Cassette torque meter (PUJ42881)	R206 (TENS BIAS)	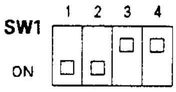 • REC	1) Set the REC mode switch on the front sub-panel to "VHS". 2) Turn off the power once and set SW1 as shown on the left. Then, turn on the power again. 3) Set the cassette torque meter and set the operation mode to REC. 4) Adjust R206 so that back tension (value at the supply side) becomes 52 ± 2 g-cm. 5) Set all switches of SW1 to OFF and turn off the power again.
		Supply back tension : 52 ± 2 g-cm Take-up torque : 170 ± 20 g-cm			

7 **Reverse (X1) torque**

- Required instrument:
  Cassette torque meter PUJ42881B

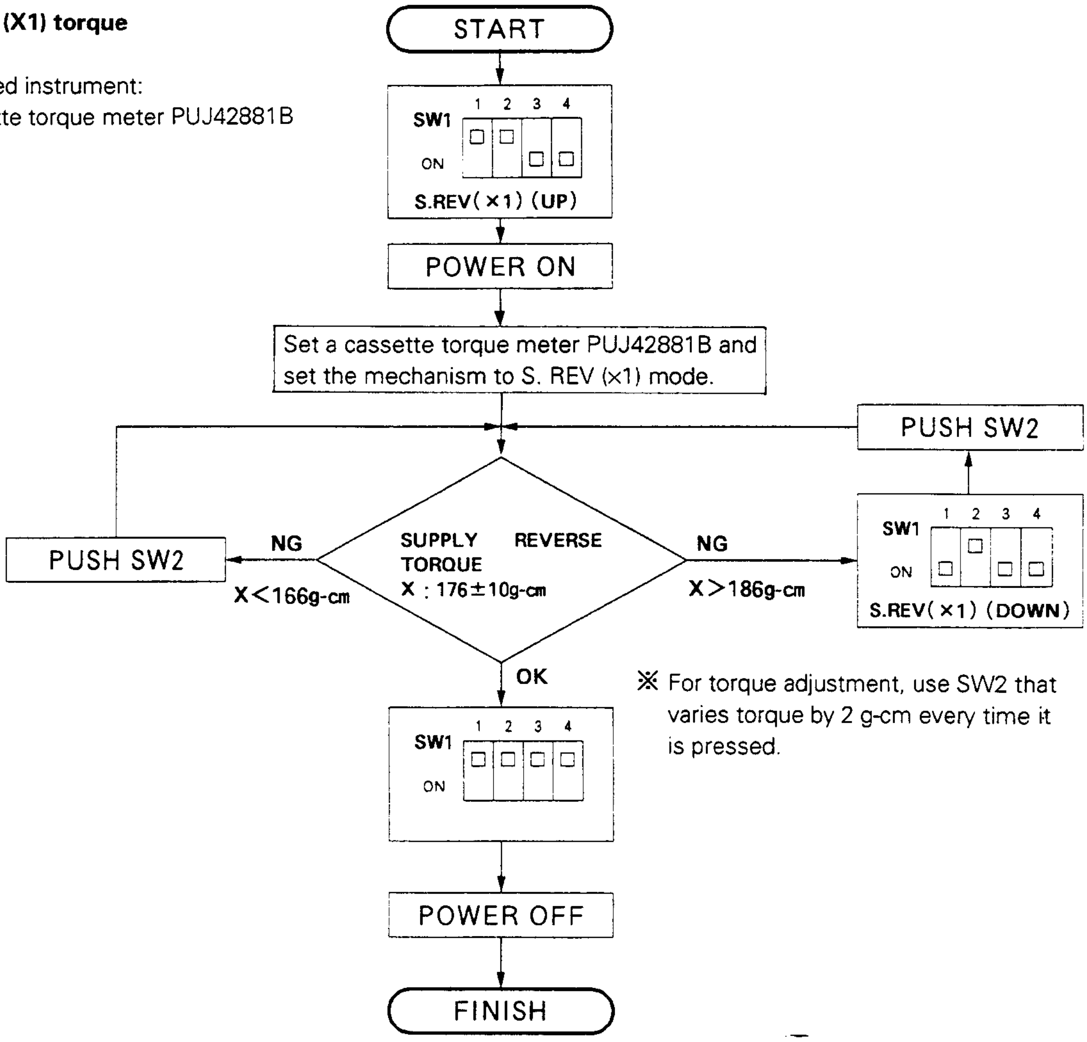
START
SW1 1 2 3 4 ON
S.REV(×1) (UP)
POWER ON
Set a cassette torque meter PUJ42881B and set the mechanism to S. REV (x1) mode.
PUSH SW2
NG
X<166g-cm
SUPPLY REVERSE TORQUE
X : 176±10g-cm
NG
X>186g-cm
SW1 1 2 3 4 ON
S.REV(×1) (DOWN)
PUSH SW2
OK
SW1 1 2 3 4 ON
POWER OFF
FINISH

※ For torque adjustment, use SW2 that varies torque by 2 g-cm every time it is pressed.

No.	Item	Check Point	Adjustment Parts	Signal & Mode	Adjustment and Check
8	**Tension warning data setting**				

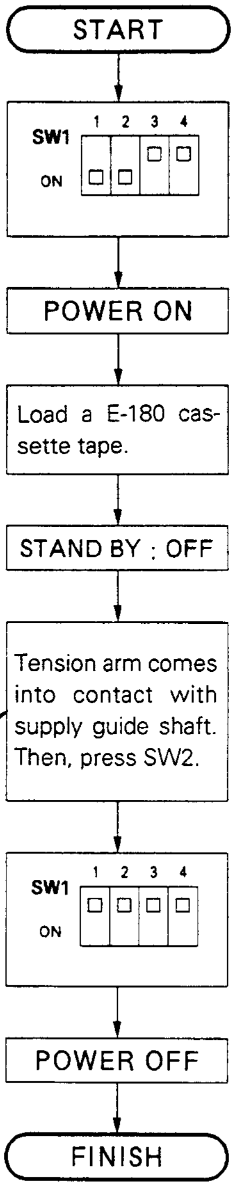
START
SW1
1 2 3 4
ON
POWER ON
Load a E-180 cassette tape.
STAND BY : OFF
Tension arm comes into contact with supply guide shaft. Then, press SW2.
SW1
1 2 3 4
ON
POWER OFF
FINISH

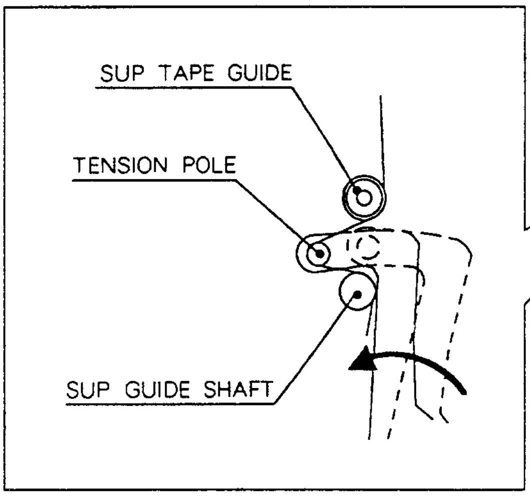
SUP TAPE GUIDE
TENSION POLE
SUP GUIDE SHAFT

Fig. 2-5-3

2.6 INTERCHANGEABILITY ADJUSTMENT

No.	Item	Adjustment and Check
	Replacement of the upper drum ass'y, drum ass'y, A/C head ass'y, etc. has need of interchangeability adjustment.	
1	**Names of main parts** 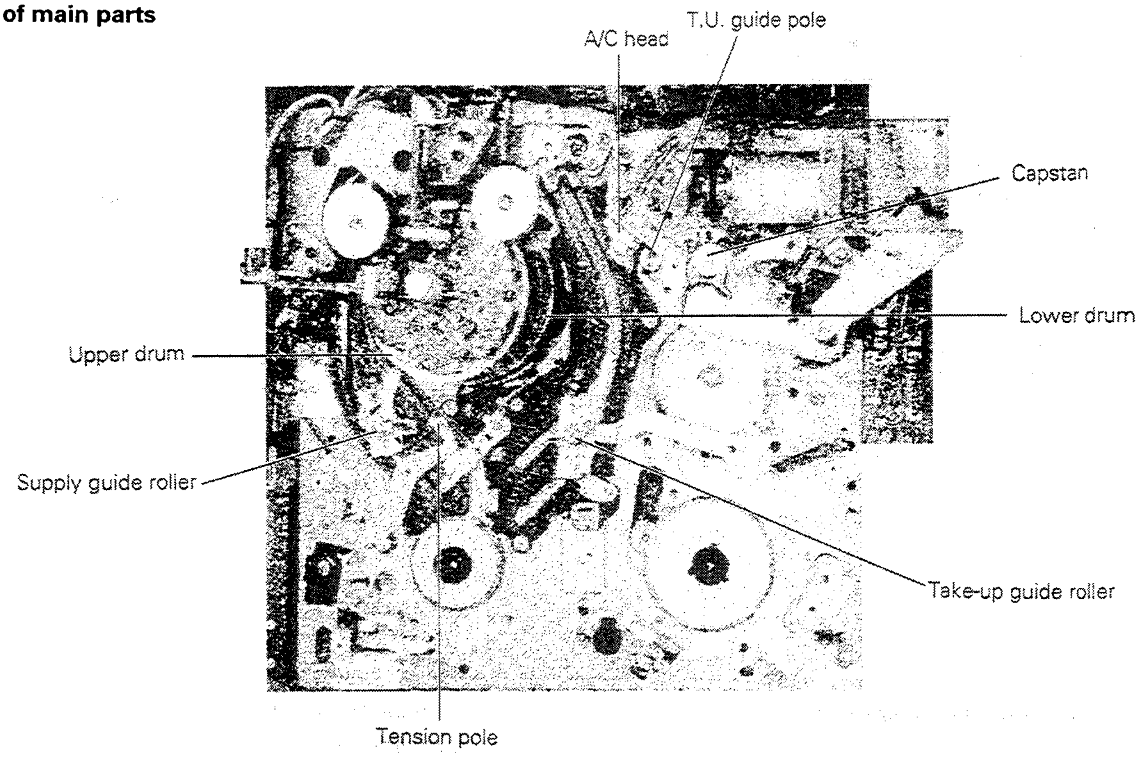 A/C head T.U. guide pole Capstan Lower drum Upper drum Supply guide roller Take-up guide roller Tension pole **Fig. 2-6-1**	
2	**FM waveform check** 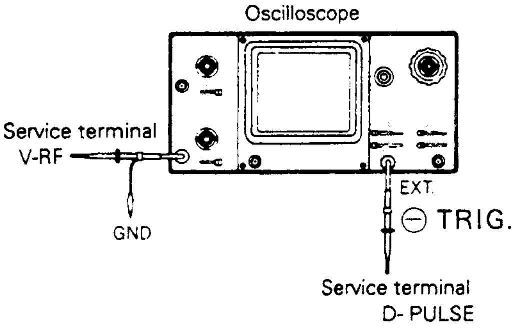 Oscilloscope Service terminal V-RF GND EXT. ⊖ TRIG. Service terminal D- PULSE **Fig. 2-6-2** 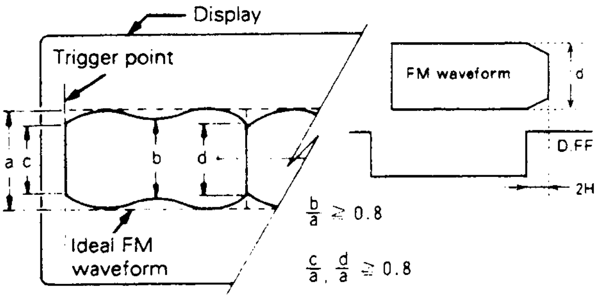 Display Trigger point a c b d Ideal FM waveform FM waveform d D.FF 2H $\frac{b}{a} \geqq 0.8$ $\frac{c}{a}, \frac{d}{a} \geqq 0.8$ **Fig. 2-6-3**	*Note: Prior to use of any alignment tape, confirm normal operation of the tape transport system with a general recording tape.* 1) For observing FM waveform, connect an oscilloscope's probe to the front service terminal (V-RF) while connect the other probe to the D-PULSE front service terminal for external sync. signal input. Observe waveform on the minus (–) slope. 2) With the MBPE-2 alignment tape being played back, adjust the oscilloscope's tracking control to maximize FM waveform. Measure respective levels shown in Fig. 2-6-3 and confirm that the ratio of each level to the maximum level (a) meets the specifications. 3) When the maximum level (a) is set for 4 graduations of the oscilloscope scale, each level (b), (c), (d) should be for 3.2 graduations or more. *Note:* To set the maximum level (a) for 4 graduations, adjust the oscilloscope's gain control with the tracking control set to the maximum position.

<table>
<tr><th>No.</th><th>Item</th><th>Adjustment and Check</th></tr>
<tr><td></td><td colspan="2">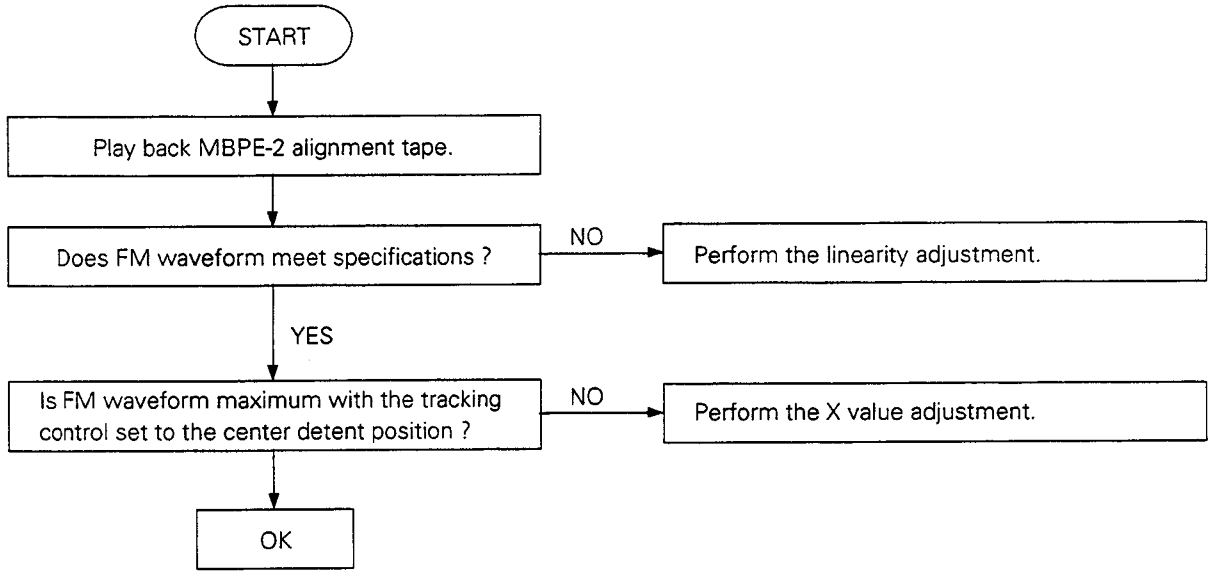

START
Play back MBPE-2 alignment tape.
Does FM waveform meet specifications ?
NO
Perform the linearity adjustment.
YES
Is FM waveform maximum with the tracking control set to the center detent position ?
NO
Perform the X value adjustment.
OK

</td></tr>
<tr><td>3</td><td>Interchangeability adjustment
– Linearity adjustment –
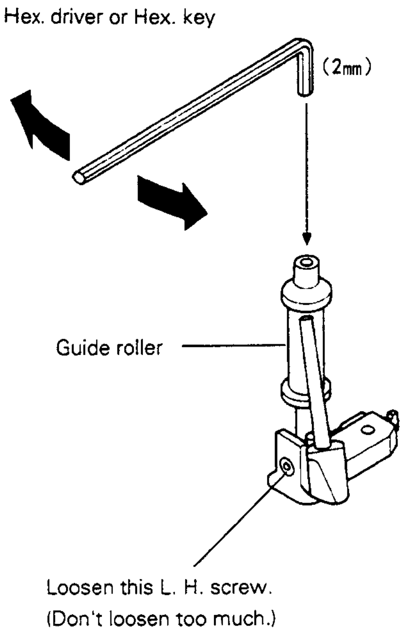

Hex. driver or Hex. key
(2mm)
Guide roller
Loosen this L. H. screw.
(Don't loosen too much.)

Fig. 2-6-4</td><td>• Cautions for adjustment:
• <i>For linearity adjustment, play back the MBPE-2 alignment tape.</i>
• <i>If FM dropout cannot be corrected by guide roller adjustment, it needs to replace the drum ass'y. This case applies to the condition that the same phenomenon occurs in both of CH-1 and CH-2 FM waveforms.</i>
• <i>Examples of FM waveform with a worn lower drum are shown in the previous section 2.3.6 "Drum assembly".</i>

• Required tools:
· Hex. driver (PGJ04034) or, Hex. key (2 mm)
· Line head wrench (PGJ04033)</td></tr>
</table>

No.	Item	Adjustment and Check
	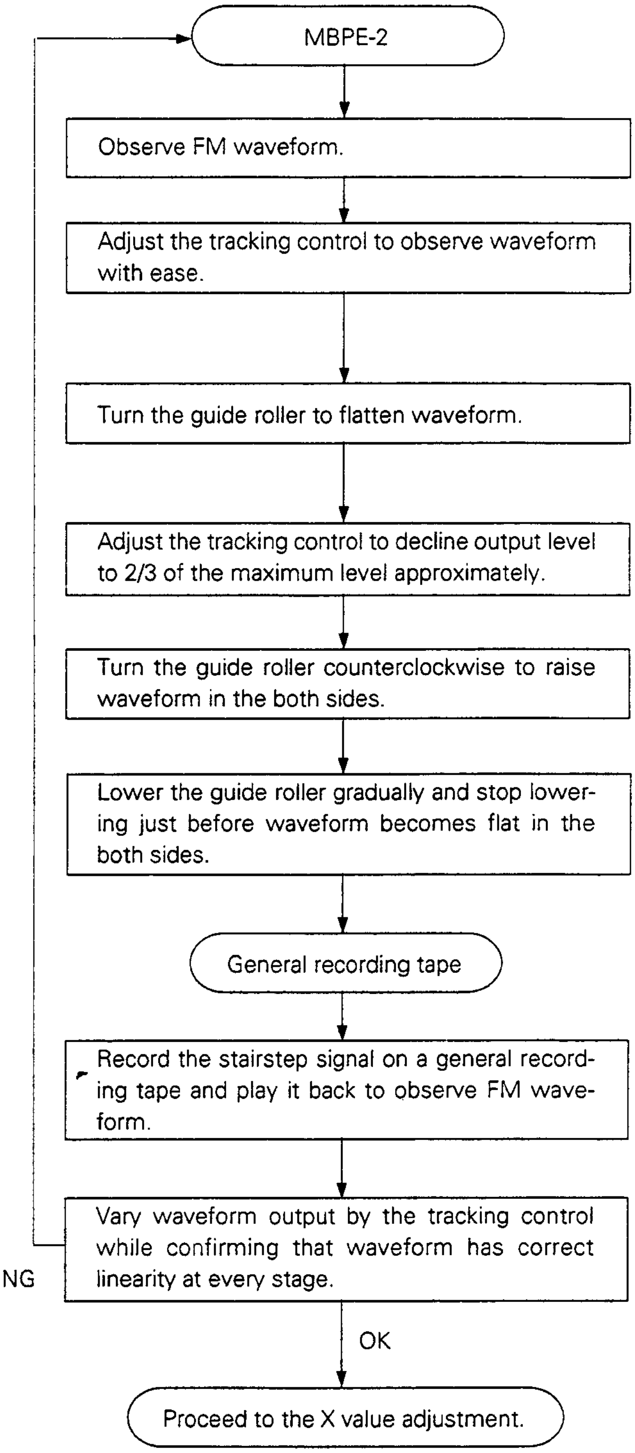 MBPE-2 Observe FM waveform. Adjust the tracking control to observe waveform with ease. Turn the guide roller to flatten waveform. Adjust the tracking control to decline output level to 2/3 of the maximum level approximately. Turn the guide roller counterclockwise to raise waveform in the both sides. Lower the guide roller gradually and stop lowering just before waveform becomes flat in the both sides. General recording tape Record the stairstep signal on a general recording tape and play it back to observe FM waveform. Vary waveform output by the tracking control while confirming that waveform has correct linearity at every stage. NG OK Proceed to the X value adjustment.	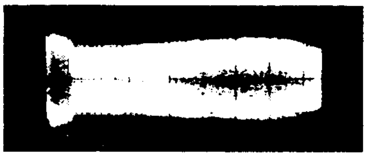 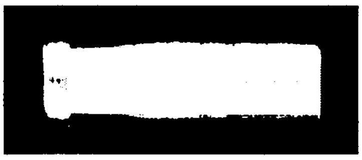 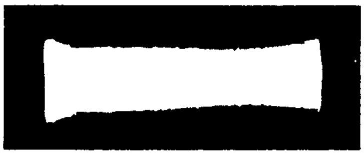 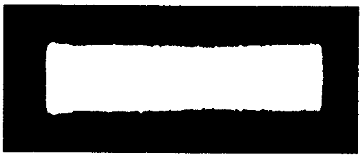 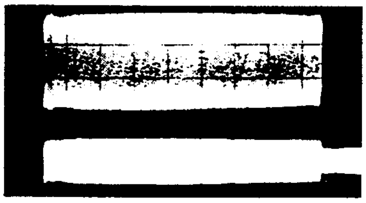 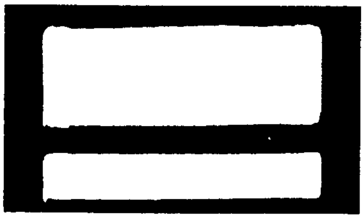

No.	Item	Adjustment and Check
4	**A/C head adjustment**	

If the A/C head is incorrectly positioned, it causes dropdown or poor S/N ratio in playback audio signal, or misaligned servo without picking-up of control signal in the worst case when a recorded tape is played back.

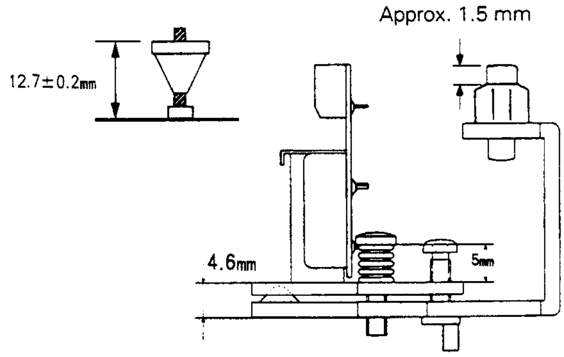

Fig. 2-6-5

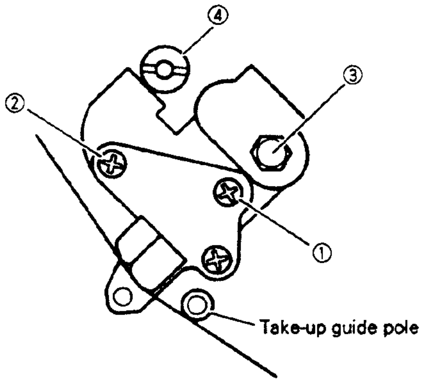

Fig. 2-6-6

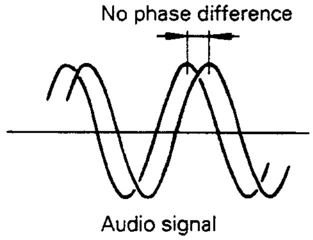

Fig. 2-6-7

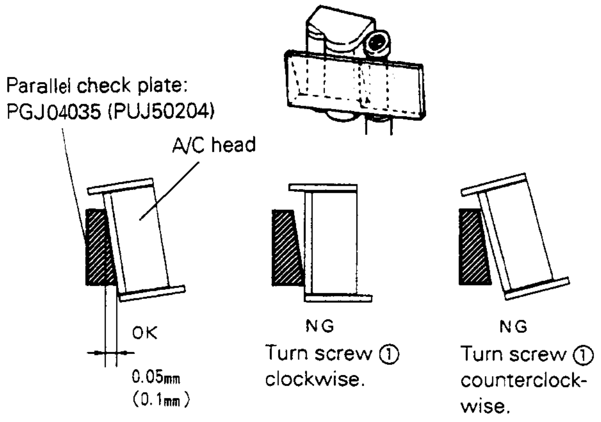

Fig. 2-6-8

- Required tools and alignment tapes:
  - Nut driver (7 mm)
  - Alignment tapes (MBAE-3, MHPE,MBAE)
  - Parallel check plate : PGJ04035 (0.05)
    PUJ50204 (0.1)

(1) Temporary height check before adjustment

1) At the stage of tape transport check prior to proceeding to adjust the A/C head, fix the A/C head at a temporary height in order to prevent the alignment tape from being damaged as well as to perform adjustment with ease.

(2) Tilt (forward bent) adjustment

1) With the parallel check plate (PGJ04035 for 0.05), adjust the setscrew ① to tilt the A/C head to match the plate.
   If thers is a gap in the upper part of the A/C head, tighten the setscrew ① to increase the tilt. If there is a gap in the lower part of the A/C head, loosen the setscrew ① to decrease the tilt.
2) Confirm that the tape is not wrinkled and damaged at the lower flange of the take-up guide pole. If so, fine adjust the height of the take-up guide pole.

(3) Adjustment of A/C head height and azimuth

1) Connect an oscilloscope's CH-1 to TP3 on 21 AUDIO-1 board and CH-2 to TP4, and set the oscilloscope to the CHOP mode.
2) Play back the alignment tape MBAE-3 while turning the hex. head nut ③ to minimize both CH-1 and CH-2 output levels by adjusting the A/C head height.
3) Play back the alignment tape MHPE while turning setscrew ② to match CH-1 and CH-2 output waveforms in the phase as well as to maximize the output levels. (azimuth adjustment)
4) Repeat the above steps 2) and 3) alternately for finer adjustment.

(4) Azimuth check

1) Connect an oscilloscope's CH-1 to TP3 on 21 AUDIO-1 board and CH-2 to TP4, and set the oscilloscope to the CHOP mode.
2) Play back the alignment tape MBAE and confirm no phase difference between CH-1 and CH-2 output waveforms (allowance: 0.1 msec or less). If phase difference is more than 0.1 msec, repeat the previous item No. (3) "Adjustment of A/C head height and azimuth".

(5) A/C head parallel check

1) With the parallel check plate (PUJ50204), confirm that tilt of the A/C head is within 0.1 mm on the measurement basis shown in the figure.
2) If not, repeat the above adjustment procedures from (2) to (4).

No.	Item	Adjustment and Check

5

X value adjustment

If the X value is adjusted incorrectly, it results in time lag between picture and normal sound in playback of a tape recorded by a set whose X value is correctly adjusted.

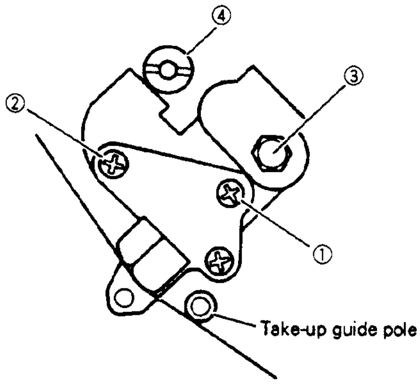

Fig. 2-6-9

Adjust two phases.

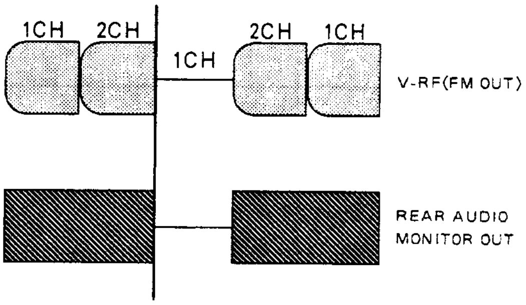

Fig. 2-6-10

- Synchronizing of oscilloscope:
1. Set the oscilloscope's time sweep to 10 msec.
2. In synchronization with D. FF signal, turn the oscilloscope's HOLD OFF knob in the (+) direction to stabilize non-recording portion.

- Required tool and alignment tapes
  - · Taper nut driver (PUJ50637)
  - · Alignment tapes (MBPE-X, MHPE)

For BR-S822/S622

1) Preparation
- Connect an oscilloscope's CH-1 to "V-RF" of the front service terminal and CH-2 to the rear panel's AUDIO MONITOR OUT terminal, and set the front panel's AUDIO MONITOR switch to NORM, AUD-1/L.
- Connect the oscilloscope's external input terminal with the D-PULSE of the front service terminal for external synchronization.
- Record the signal and play it back to confirm that the FM waveform is maximum with the tracking control set to the center position. If not, check the tracking adjustment (3.2.2) again.
- Set the tracking control to the center position.

2) Play back the alignment tape MBPE-X.
3) Adjust the taper nut ④ so that non-recording portions of AUDIO and FM siganls match in the phase (±1 field) with maximum FM output.
4) Play back the alignment tape MHPE and confirm that FM waveform is maximum with the tracking control set at the center position.
5) If the result of the above step 4) is unsatisfactory, move the A/C head to the maximum FM waveform position nearest the adjustment point of the above step 3).

For BR-S522

Note: The following is for X-value adjustment and tracking preset adjustment.

1) Preparation
- Set for the "adjustment mode 4". (Refer to 1.9 Adjustment Mode, page 1-30.)
- Connect an oscilloscope's CH-1 to "V-RF" of the front service terminal and CH-2 to the rear panel's AUDIO MONITOR OUT terminal, and set the front panel's AUDIO MONITOR switch to NORM, AUD-1/L.
- Connect the oscilloscope's external input terminal with the D-PULSE of the front service terminal for external synchronization.

2) Play back the alignment tape MBPE-X.
3) Adjust the taper nut ④ so that non-recording portions of AUDIO and FM siganls match in the field (±1 field) with maximum FM output.
4) Cancel the adjustment mode and play back the alignment tape MBPE-X.
5) Adjust R146 on 30 D/C SERVO board so that non-recording portions of AUDIO and FM signals match in the phase (±1 field) with maximum FM output.

2.7 ADJUSTMENT OF TAPE TRANSPORT SYSTEM

<table>
<tr><th>No.</th><th>Item</th><th>Adjustment and Check</th></tr>
<tr><td></td><td colspan="2">In general, the tape transport system has no need of adjustment since it has precisely been adjusted before shipment. Check and adjustment are required only after long time use and parts replacement of the tape transport system.</td></tr>
<tr><td>1</td><td>Check of tape transport system</td><td>• Required implements : Thin tape (SE-240,SE-C30)
1) With a thin tape loaded in, check the following things at the beginning and the end of the tape.
a) Repeat loading and unloading operations to confirm that the tape is neither damaged nor wrinkled at the guide pole, guide roller and guide arm roller.
b) Repeat the same check in the Play mode, FWD mode and REV mode respectively.</td></tr>
<tr><td></td><td colspan="2">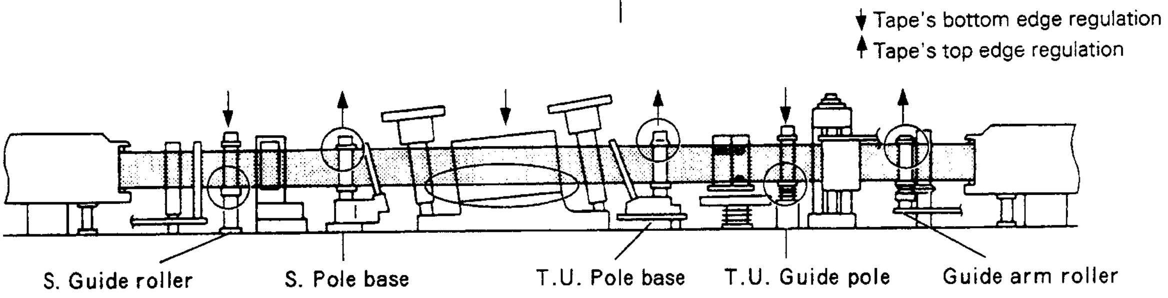
Tape's bottom edge regulation
Tape's top edge regulation
S. Guide roller
S. Pole base
T.U. Pole base
T.U. Guide pole
Guide arm roller

Fig. 2-7-1</td></tr>
<tr><td>2</td><td>Supply guide roller height adjustment</td><td>• Required implements:
· Height gauge (PGJ04032)
· Hex. driver (PGJ04034)
· Hex. key (1.27 mm)
· Thin tape (SE-240)
1) With the height gauge set on the main deck, check the height of the upper surface of the lower flange under the supply guide roller.
2) If it needs adjustment, loosen a setscrew underneath the guide roller and adjust the height of the guide pole with a hex. driver.
3) With a thin tape loaded in, fine adjust the guide roller height in the Play mode so that the tape smoothly runs on the lower flange of the guide roller.
4) Confirm no damage on tape in the REV mode. If the tape is damaged, slightly decrease the guide roller height within a half turn adjustment of the hex. driver.
5) Tighten the setscrew.
6) Check smooth tape transport again.</td></tr>
<tr><td></td><td colspan="2">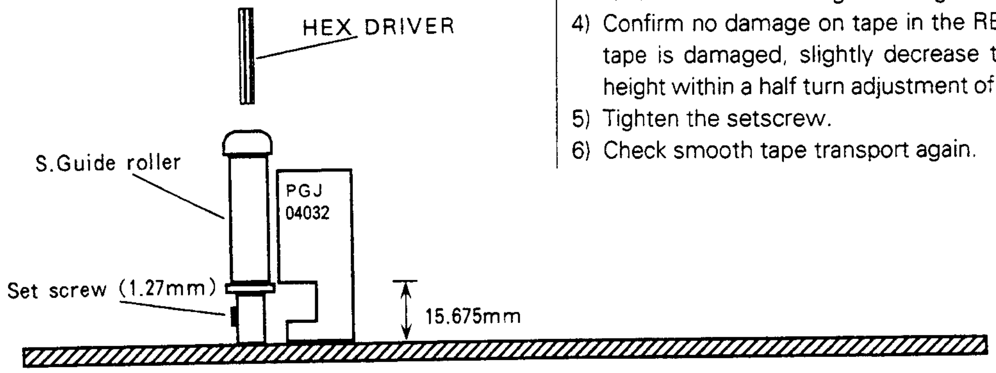
HEX DRIVER
S.Guide roller
PGJ 04032
Set screw (1.27mm)
15.675mm

Fig. 2-7-2</td></tr>
</table>

No.	Item	Adjustment and Check
3	**Take-up guide pole height adjustment** 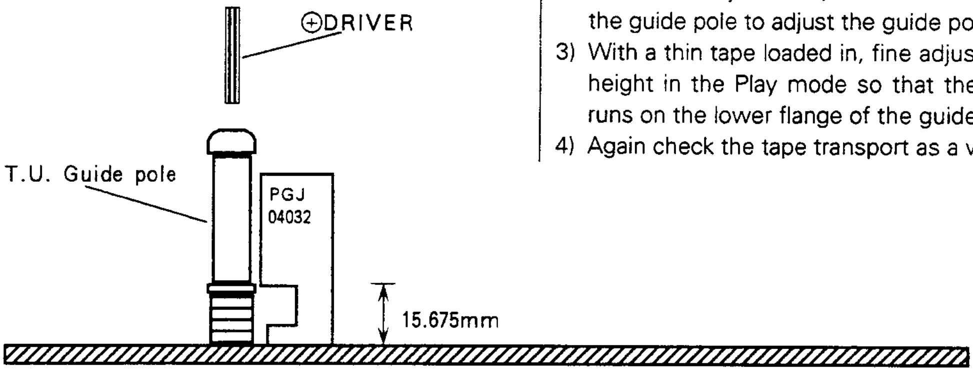 Fig. 2-7-3	• Required implements: · Height gauge (PGJ04032) · Thin tape (SE-240) 1) With the height gauge set on the main deck, check the height of the upper surface of the lower flange of the guide pole. 2) If it needs adjustment, turn the screw on the top of the guide pole to adjust the guide pole height. 3) With a thin tape loaded in, fine adjust the guide pole height in the Play mode so that the tape smoothly runs on the lower flange of the guide pole. 4) Again check the tape transport as a whole.
4	**Guide arm roller height adjustment** 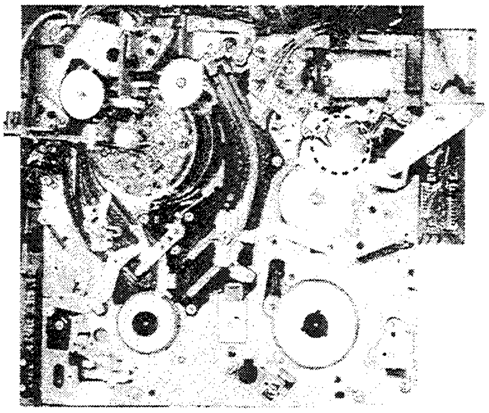 Fig. 2-7-4 Turning driver clockwise: Height increases. Turning driver counterclockwise: Height decreases. 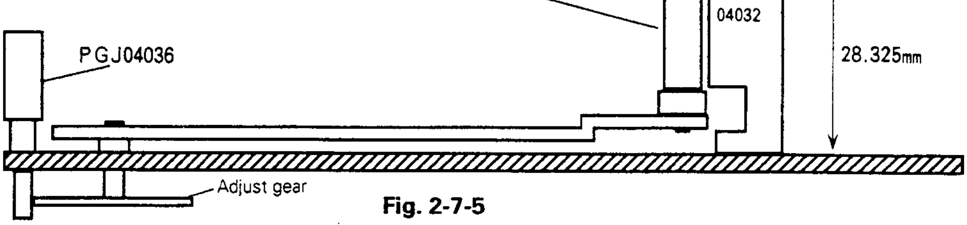 Guide arm roller assy PGJ 04032 28.325mm PGJ04036 Adjust gear Fig. 2-7-5	• Required implements: · Height gauge (PGJ04032) · Guide arm height adjusting driver (PGJ04036) · Thin tape (SE-C30) 1) Turn off the power. 2) Set a height gauge on the main deck's cut surface in the right side of the capstan motor as shown in the figure. 3) Turn the loading motor counterclockwise by hand while checking the height of the lower face of the upper flange of the guide arm roller. 4) If the height is out of the specifications, insert the guide arm height adjusting driver into the hole of the main deck and adjust the height. 5) With a thin C. cassette tape loaded in, check that the tape smoothly runs on the upper surface of the lower flange of the take-up guide pole both in the FWD and REV modes. (Tape travel height is not changed when the mode is shifted between FWD and REV.) 6) If there is damage or wrinkle observed in the tape, repeat the above steps 1) and 5) for smooth tape transport.

No.	Item	Adjustment and Check
5	**Tension pole perpendicularity (vertical centering) check** 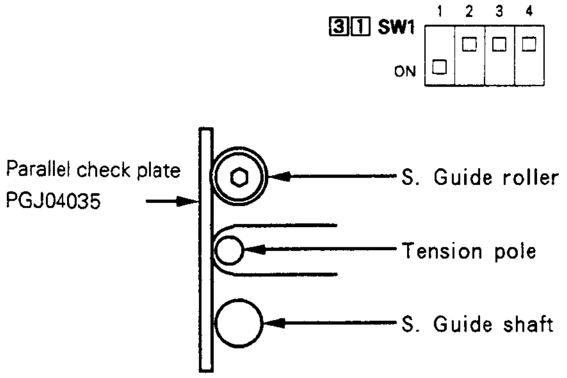 31 SW1 1 2 3 4 ON Parallel check plate PGJ04035 S. Guide roller Tension pole S. Guide shaft **Fig. 2-7-6**	- Required jig: · Parallel check plate (PGJ04035) 1) Turn off the power once and set SW1-1 of the DIP switch on 31 M. CTL & R. SERVO board to ON. Then turn on the power switch again. 2) Again turn off the power when the mechanism enters the loading end position. 3) Press the flat surface of the parallel check plate against both of the supply guide shaft and the supply guide roller to check the perpendicularity of the tension pole. 4) If there is a gap between the parallel check plate and either side of the tension pole, adjust the perpendicularity of the tension pole. 5) After the above adjustment, totally check the tape transport system and the reel servo circuit (see 2.5).

SECTION 3
ELECTRICAL ADJUSTMENT

3.1 PRECAUTIONS

- Before proceeding to any electrical adjustment, it is the firstprerequisite to confirm that the objective item is out of order or of breakdown.
  Moreover, for parts and items that need correct mechanical adjustment prior to electrical adjustment, begin by confirming that they are exactly mechanically adjusted.
- Make sure to start electrical adjustment 5 or more minutes after the power is turned on.
- Adjustment procedure of the reel servo circuit is described in the previous section 2.5 "Adjustment of Reel Servo Circuit".

3.1.1. Required tools and test instruments

Besides the special implements shown in Fig. 3-1-1, the following test instruments are necessary for electrical adjustment.

- Frequency counter (10MHz or more and 100mV or less in the sensitivity)
- Video signal generator (TG-7/2, Model 1411, or equivalent)
- Waveform monitor (1485R or equivalent)
- Digital voltmeter (available for $1mV_{DC}$ or under)
- Sweep signal generator (100kHz to 10MHz, or equivalent)
- Oscilloscope (dual-trace type, for more than 50MHz)
- TV monitor
- Vectorscope (521A or equivalent)
- Audio tester

Extension boards		Carrier checker
1. PGJ05043 for R/P Y, R/P C, R/R C-2, TBC-1 boards. 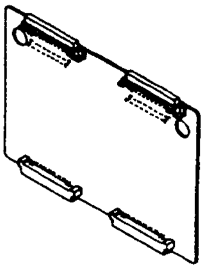	2. PGJ05044 for OUTPUT, Y COMB, R/P ADJ, AUD-2, AUD-3, U-VCR Y/C OUT AVM/ONSC, TBC-2, TBC-3, FUSE boards. 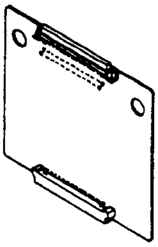	PGJ05008-2 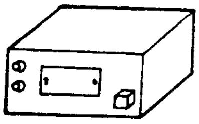
Alignment tapes	7-pin output conversion cable	7-pin input conversion cable
(See page 3-2.) 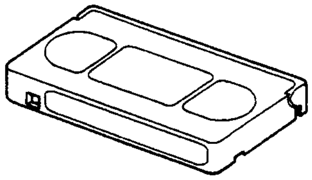	PGJ05018 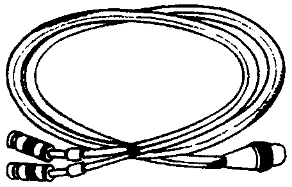 7-pin(male)-BNC × 2	PGJ05028 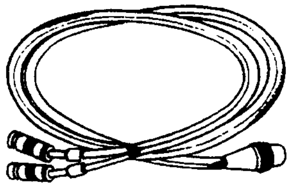 7-pin(female)-BNC × 2

Fig. 3-1-1 Required special implements

3.1.2 Speciffication of alignment tapes

•MHPE

Video signal	Audio signal	Application	Remark
VHS SP mode Stairstep	7kHz	•For check adjustment of interchangeability •For adjustment of PB swiching point	MH-2 stairstep signal substitutable.

•MHVE-2

Video signal	Audio signal	Application	Remark
VHS SP mode Color bar	–	•For check and adjustment of video PB circuit	MH-2 color bar signal is substitutable.

•MBAE

Video signal	Audio signal	Application	Remark
CTL signal only	1kHz(0dB)	•For check and adjustment of audio PB circuit	MH-2 1kHz signal is substitutable.

•MH-8

No.	PB time	Video signal	Audio signal	Application
1	2 minutes	Color sweep	400Hz(−10dB)	•Check and adjustment of video signal's frequency response in PB circuit. •Check and adjustment of audio signal's frequency response in PB circuit.
2	2 minutes	Color sweep	100Hz(−10dB)	
3	2 minutes	Color sweep	8kHz(−10dB)	
4	4 minutes	Color sweep	–	

•MH-F8

No.	PB time	Video signal	Audio signal	Application
1	5 minutes	–	Carrier only	Check and adjustment of interchangeability of mechanism.
2	5 minutes	Stairstep	Carrier only	Check and adjustment of interchangeability of mechanism.
3	5 minutes	–	1kHz (±50kHz DEV)	Check and adjustment of FM audio PB circuit.

•MHVE-2H

Video signal	Audio signal	Application	Remark
VHS SP mode Color bar	–	•For check and adjustment of video PB circuit	MH-2 color bar signal is substitutable.

•MBVE-14H

Video signal	Audio signal	Application	Remark
S-VHS SP mode Sweep	–	• For AUTO EQ adjustment	–

•MBVE-3H

Video signal	Audio signal	Application	Remark
VHS SP mode Video sweep	–	•For check and adjustment of video frequency response	Only MHVE-3H part name changed.

3.1.3 Signals required for video system adjustment

1) EBU 75% color bar

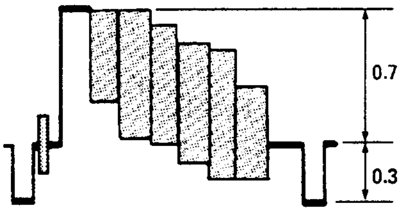

2) Stairstep (5 steps) signal

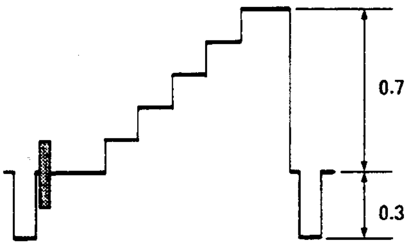

3) Modulation stairstep signal

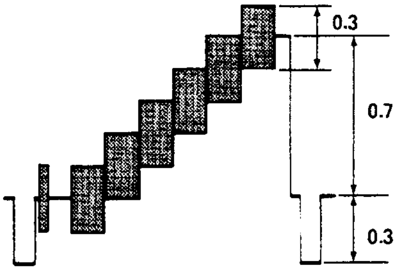

4) Pulse and bar signal

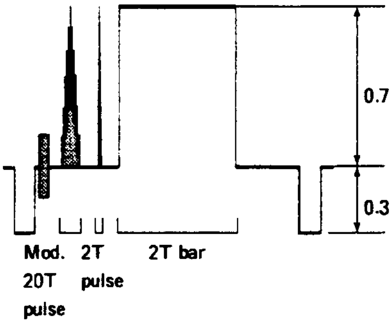

4) Multiburst

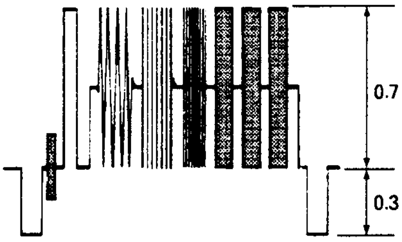

6) Video sweep signal (100kHz to 5MHz)

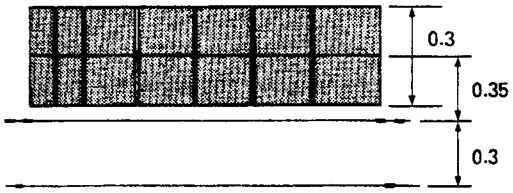

To supply this signal through the LINE IN terminal, make sure to use a sweep signal having a good characteristic in the H correlation in order to avoid erroneous operation of comb filters. For a reference, a signal having a good H correlation shows such a clear pattern as neighboring black and white lines are the same in the width and the interval on the monitor as shown in the figure below.

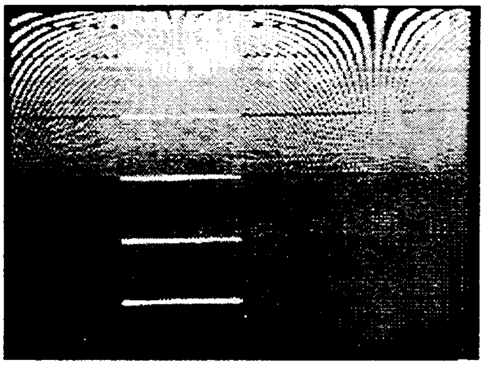

7) Blue or Yellow signal

Another monochromatic signal is substitutable.
Use of any monochromatic signal whose color level is high makes adjustment easy.

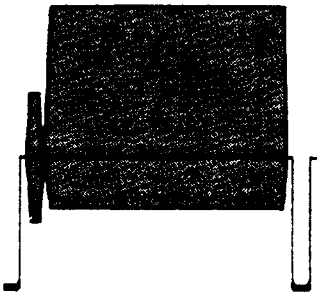

8) Sine wave (5.0MHz)

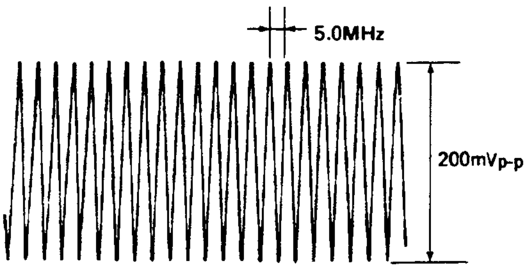

3.1.4 Main boards location

In the following sections, P.C. boards on which check points, adjustment parts and DIP switches are provided are indicated by board numbers respectively. The photo below shows only P.C. boards for which check and adjustment may possibly be required.

Note:

One adjusting, set switches and controls on the front and rear panels to the respective default setting (setting position at shipment) unless otherwise specified.

Before adjustment, set the following switches as indicated below

— MEMORY switch —

No.201(DOLBY NR) : "OFF"
No.313(PB/EE・PB) : "PB/EE"

(For resetting manner of the memory switch, refer to the section 1.)

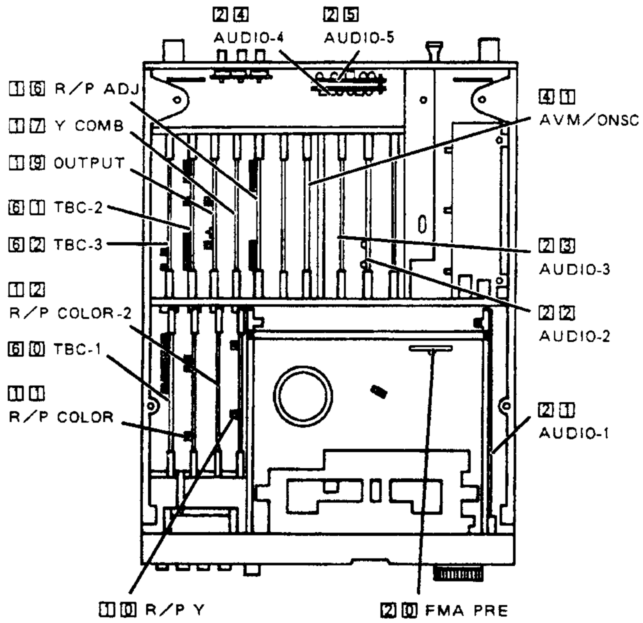

24 AUDIO-4
25 AUDIO-5
16 R/P ADJ
17 Y COMB
19 OUTPUT
61 TBC-2
62 TBC-3
12 R/P COLOR-2
60 TBC-1
11 R/P COLOR
41 AVM/ONSC
23 AUDIO-3
22 AUDIO-2
21 AUDIO-1
10 R/P Y
20 FMA PRE

Fig. 3-1-2 Location of main P.C. boards

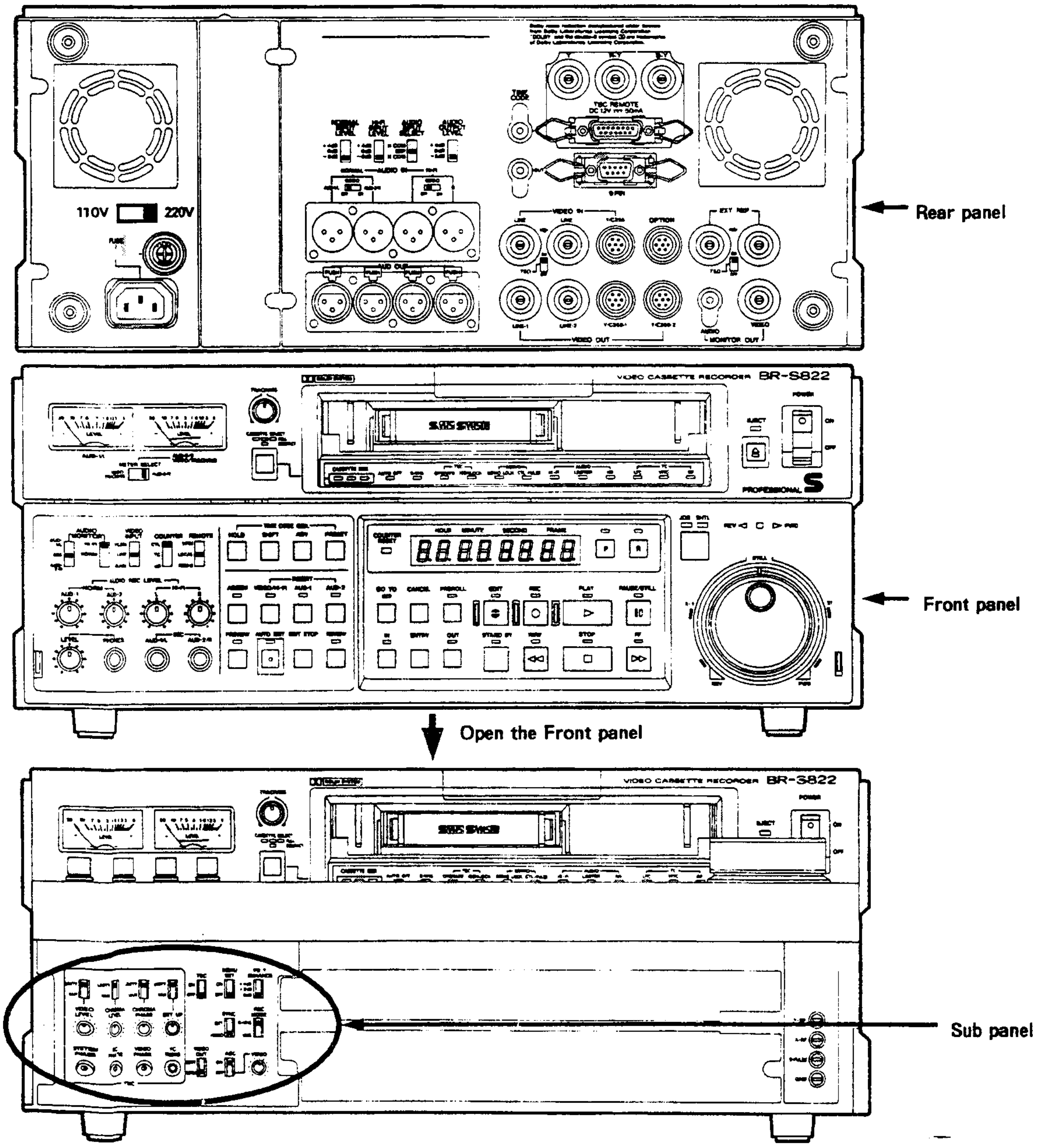

110V
220V
Rear panel
VIDEO CASSETTE RECORDER BR-S822
PROFESSIONAL S
88888888
Front panel
Open the Front panel
VIDEO CASSETTE RECORDER BR-S822
Sub panel

Fig. 3-1-3 Initial setting of front and rear panel switches at shipment

3.1.5. Explanation of main columns in check and adjustment table

1. "Check Point" column

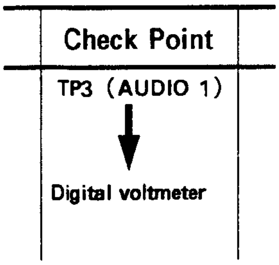

The Check Point column indicates measuring instrument(s) to be used besides test points to be connected with it.
However, oscilloscope is not indicated except for audio adjustment.
In case of the example on the left, connect a digital voltmeter to TP3 on the AUDIO 1 board.
If no measuring instrument is specified for check and adjustment of the audio circuit, use an audio tester.
This column indicates not only test points on P.C. boards but also terminals on the rear panel. In such a case, connect a measuring instrument directly to the specified terminal.

a. HiFi AUDIO OUT = HiFi AUDIO output terminal (XLR connector)
b. N.AUDIO OUT =NORMAL AUDIO output terminal (XLR connector)
c. Y/C 443 OUT,Y OUT, C OUT = Y/C 443 output terminals (7-pin connectors)

Note: Y or C output to be connected with a measuring instrument is indicated in this column.

d. COMPONENT = Component (Y,R-Y,B-Y) output terminals (BNC connectors)

Note: One of Y , R-Y and B-Y connectors is specified in this column for connecting a measuring instrument.

e. VIDEO OUT = LINE output terminal (BNC connector)

2. "Signal" column

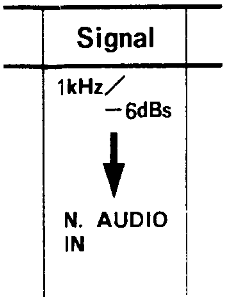

The Signal column indicates signals to input as well as terminals to input the signals.
if no input terminal is specified, input signals to the LINE IN terminal.
In case of the example on the left, input 1 kHz/−6 dBs signal to the NORMAL AUDIO input terminal.
In case of adjustment with an alignment tape being played back, its part number and the segment to be played back are indicated in parentheses.

3. "Mode" column

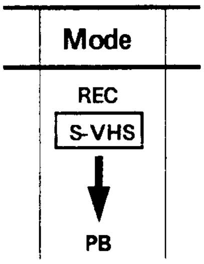

This column indicates operation mode of the set for adjustment.
Since this set has two recording modes of "S-VHS" and "VHS", set the REC MODE switch on the sub panel (inside the front panel) to the specified position if one of them is indicated in this column.
When "VHS" mode is specified, use a VHS cassette tape, while use an S-VHS cassette tape for "S-VHS" mode. if neither mode is specified,the mode does not matter.

Note: Make sure to use double-coated tape for measurement. (If not, measurement value may be incorrect.)

4. About RAP mode

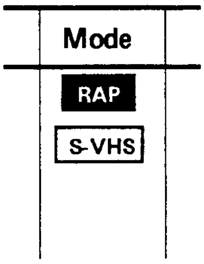

For items having RAP indication in the "Mode" column, set the switch S1 on the R/P ADJUST board to "RAP" position and set the mode to the STANDBY ON (STANDBY and STOP LEDs will come on).
Then, select "06" of the adjustment mode.
If "06" is not selected, it may cause abnormal triggering.
(For setting of the adjustment mode, refer to the section 1.9 "Adjustment mode".)

In the above condition, change over the switch S2 (between RAP1 and RAP2), and real time observation of CH1 (RAP1) and CH2 (RAP2) waveforms that were recorded by the same set becomes possible.
For this observation, set and trigger oscilloscope as mentioned below.

V-rate : with signal from TP11
(R/P ADJUST-3E)
Minus (−) slope
H-rate : with signal from TP10
(R/P ADJUST-3E)
Minus (−) slope

Note: There is a slight difference between two signal levels of one measured in the RAP mode and the other measured in playback of signal recorded and by the same set. Therefore, do not use this RAP mode for items other than those indicated with it.

3. 2 D/C SERVO CIRCUIT

Note • Unless otherwise mentioned, check points and adjustments are on the D/C SERVO bord.

No.	Item	Check point	Adjustment	Signal	Mode	Check and Adjustment
1	**Capstan FG duty factor & level**	TP4 TP5 TP16 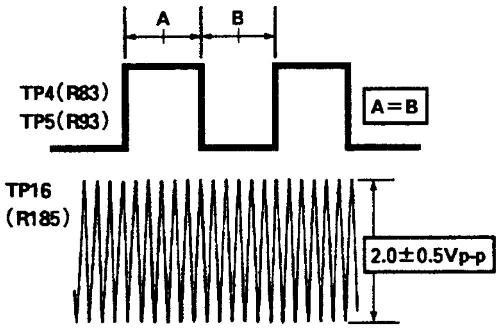 A B TP4(R83) TP5(R93) A=B TP16 (R185) 2.0±0.5Vp-p	R83 R93 R185	Color bar	REC S-VHS	1) Adjust R83 so that the duty ratio of the capstan FG pulse at TP4 becomes fifty-fifty. (A=B in the figure). 2) Adjust R93 so that the duty ratio of the capstan FG pulse at TP5 becomes fifty-fifty. (A=B in the figure) 3) Adjust R185 to obtain 2.0±0.5Vp-p as the signal level at TP16. ***Note** When waveform fluctuates, adjust the maximum waveform level to be 2.0Vp-p.* 4) Confirm that the duty ratio at TP4 is fifty-fifty still.
2	**Tracking preset**	VIDEO OUT TP3 (D/C SERVO) 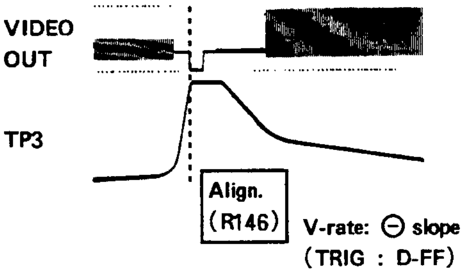 VIDEO OUT TP3 Align. (R146) V-rate: ⊖ slope (TRIG : D-FF)	R146	Color bar	REC S-VHS ↓ PB	1) Confirm that the TBC switch is "OFF". 2) Set the tracking control to the center click position. 3) Record the color bar signal and play it back. 4) With the color bar signal being played back, adjust R146 to coincide the falling point of V sync signal from the VIDEO OUT with the rising point of TP3's pulse. ***Note** With the tracking control set to the center click position, confirm that the tracking meter reads the maximum value.*
3	**PB switching point**	VIDEO OUT TP9 : D.FF (D/C SERVO) — VIDEO OUT (TRIG.:D.FF) — 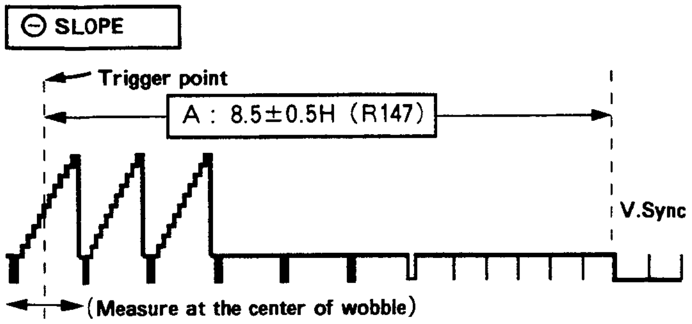 ⊖ SLOPE Trigger point A : 8.5±0.5H (R147) V.Sync (Measure at the center of wobble) 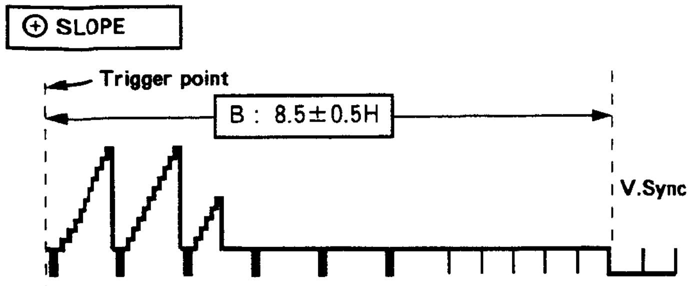 ⊕ SLOPE Trigger point B : 8.5±0.5H V.Sync (Measure at the center of wobble)	R147	MHPE	PB	1) Confirm that the TBC switch is "OFF". 2) Play back the alignment tape MHPE. ***Note** Adjust the TRACKING VR to the best tracking position.* 3) With an oscilloscope which is set for ⊖slope and externally triggered with TP9's signal, adjust R147 so that "A" shown in the figure becomes 8.5H. 4) With the oscilloscope set for ⊖slope, confirm that "B" shown in the figure is 8.5±0.5H.

3. 3 AUDIO CIRCUIT

Note •All adjustment values are balanced values with 600Ω resistance.
•Turn off the memory switch No.201 (DOLBY NR) unless otherwise indicated.

No.	Item	Check point	Adjustment	Signal	Mode	Check and Adjustment
1	**AUDIO REC LEVEL VR setting & AUDIO LEVEL METER adjustment**	HiFi AUDIO OUT (600Ω terminator)	R87(Lch) R88(Rch) (AUDIO-2)	1kHz/ −6dBs ↓ HiFi AUDIO IN	E-E	1) Set the AUDIO MONITOR switch to the "Hi-Fi" position. 2) Adjust output level at the HiFi AUDIO output terminal to be −6.0dBs with the HiFi REC LEVEL VR. ***Note*** *For the following adjustment,leave the Hi-Fi REC LEVEL VR as it is set in the step 2).* 3) Reading the AUDIO LEVEL METER head-on, adjust R87(L-ch) and R88(R-ch) so that the meter reads 0.0dB respectively.
		N. AUDIO OUT (600Ω terminator)	−	1kHz/ −6dBs ↓ N. AUDIO IN	E-E	1) Set the AUDIO MONITOR switch to the "NORM" position. 2) Adjust output level at the N.AUDIO output terminal to be −6.0dBs with the N.AUDIO REC LEVEL VR. ***Note*** *For the following adjustment, leave the N.AUDIO REC LEVEL VR as it is set in the step 2).* 3) Read the AUDIO LEVEL METER head-on while confirming that the pointer indicates 0.0±0.5dB. ***Note*** *Confirm that level difference between R and L channels is within 0.5dB.*
2	**Normal Audio playback level**	N. AUDIO OUT (600Ω terminator)	R25(Lch) R26(Rch) (AUDIO-1)	MBAE **Playback level : −6.0dBs**	PB	1) Make sure of the MEMORY switch No.201 (DOLBY NR) being set to "OFF". 2) Adjust R25(L-ch) and R26(R-ch) so that each output level is −6.0dBs. ***Note*** *Adjust the TRACKING VR to the best tracking position.* ***Note*** *Confirm that the meter pointer does not overshake in the Search FWD/ REV mode.*
3	**Normal Audio playback frequency response**	N. AUDIO OUT (600Ω terminator)	R125(Lch) R126(Rch) (AUDIO-1)	MH-8	PB	1) Make sure of the MEMORY switch No.201 (DOLBY NR) being set to "OFF". 2) With the alignment tape MH-8, confirm that playback level of the 100Hz signal is −0.5dB as against playback level of the 400Hz signal. 3) With the same tape used, adjust R125(L-ch) and R126(R-ch) so that playback level of the 8kHz signal is 0dB compared with that of the 400Hz signal. ***Note*** *Adjust the TRACKING VR to the best tracking position.*

- Rated frequency response -

400Hz	100Hz	8kHz
0dB (Reference)	−0.5±2.0dB	0dB

No.	Item	Check point	Adjustment	Signal	Mode	Check and Adjustment
4	**Audio bias frequency & level**	TP5 (AUDIO-1) ↓ Frequency counter	L405 (AUDIO-1)	No input signal	REC S-VHS	1) Adjust frequency at TP5 to be 70kHz.
			TP5 : 70±3kHz			
		TP5(Lch) TP6(Rch) (AUDIO-1) ↓ Oscilloscope	T401(Lch) T402(Rch) (AUDIO-1)	No input signal	REC S-VHS	2) Turn R425 and R426 on the AUDIO1 board full clockwise. In this condition, adjust T401(L-ch) and T402(R-ch) to maximize bias oscillation respectively. (more than 80Vp-p)
			TP5,TP6 : Maximum			
			R425(Lch) R426(Rch) (AUDIO-1)	No input signal	REC S-VHS	3) Adjust R425 (L-ch) and R426 (R-ch) to obtain 44Vp-p as respective bias levels. ***Note The above bias levels may be readjusted later in the Item No.8.***
			TP5,TP6 : 44Vp-p			
			R455(Lch) R456(Rch) (AUDIO-1)	No input signal	REC VHS	4) erform recording without signal input in the VHS mode. 5) Adjust R455(L-ch) and R456(R-ch) to obtain 33Vp-p as respective bias levels. ***Note The above bias levels may be readjusted later in the Item No.8.***
			Bias level : 33Vp-p			
5	**Normal Audio REC／PB**	N. AUDIO OUT (600Ω terminator)	R7(Lch) R8(Rch) (AUDIO-1)	1kHz／ −6dBs ↓ N. AUDIO IN	REC VHS ↓ PB	1) Record the 1kHz／−6dBs signal and play it back. 2) Confirm that the playback level is −6.0± 0.5dBs on R and L channels respectively (level difference between channels must be within 0.5dB.). 3) When playback level is out of the the specifications, roughly adjust R7(L-ch) orR8(R-ch), and repeat the above steps 1) and 2) until the adjustment brings satisfactory result.
			Playback level : −6.0±0.5dBs			
			−	1kHz／ −6dBs ↓ N. AUDIO IN	REC S-VHS ↓ PB	4) Record the 1kHz／−6dBs signal and play it back. 5) Confirm that the playback level is $-6.0^{+2.0}_{-1.0}$dBs.
			Playback level : $-6.0^{+2.0}_{-1.0}$dBs			

No.	Item	Check point	Adjustment	Signal	Mode	Check and Adjustment
6	**Normal audio PB frequency response (REC/PB)**	N. AUDIO OUT (600Ω terminator)	–	1kHz, 10kHz/ −26dBs ↓ N. AUDIO IN	REC S-VHS ↓ PB	1) Make sure of MEMORY switch No.201(DOLBY NR) being set to "OFF". 2) Record the 1kHz and 10kHz signals, and play them back. 3) Confirm that playback level of the 10kHz signal is −0.5±0.5dB as against that of the 1kHz signal. 4) If not, fine adjust the bias levels explained in the previous item, No .4. a) If the level of the 10kHz signal is higher than the specifications, raise the bias level according to the step 3) of the Item No.4. b) If the level of the 10kHz signal is lower than the specifications, decline the bias level according to the same step. 5) After the bias adjustment, repeat the steps 2) and 3) to meet the specifications.
			–	1kHz, 12kHz/ −26dBs ↓ N. AUDIO IN	REC S-VHS ↓ PB	6) Set the NR switch to "ON", and record the 1kHz and 12kHz signals and play them back. 7) Confirm that playback level of the 12kHz signal is $-0.0^{+1.5}_{-3.5}$dB as against that of the 1kHz signal (level difference between R and L channels must be within 3.0dB). 8) Return the NR switch to "OFF" position.
		N. AUDIO OUT (600Ω terminator)	–	1kHz, 10kHz/ −26dBs ↓ N. AUDIO IN	REC VHS ↓ PB	9) Record the 1kHz and 10kHz signals, and play them back. 10) Confirm that playback level of the 10kHz signal is −0.5±0.5dB as against that of the 1kHz signal. 11) If not, fine adjust the bias levels explained in the previous item, No.4. a) If the level of the 10kHz signal is higher than the specifications, raise the bias level according to the step 3) of the Item No.4. b) If the level of the 10kHz signal is lower than the specifications, decline the bias level according to the same step. 12) After the bias adjustment, repeat the steps 9) and 10) to meet the specifications.
			–	1kHz, 12kHz/ −26dBs ↓ N. AUDIO IN	REC VHS ↓ PB	13) Set the NR switch to "ON", and record the 1kHz and 12kHz signals and play them back. 14) Confirm that playback level of the 12kHz signal is $-0.0^{+1.5}_{-3.5}$dB as against that of the 1kHz signal (level difference between R and L channels must be within 3.0dB). 15) Return the NR switch to "OFF" position.

- Rated frequency response -
(S-VHS NR: "OFF")

1kHz	10kHz
0dB (Reference)	−0.5±0.5dB

- Rated frequency response -
(S-VHS NR: "ON")

1kHz	12kHz
0dB (Reference)	$-0.0^{+1.5}_{-3.5}$dB

- Rated frequency response -
(VHS NR: "OFF")

1kHz	10kHz
0dB (Reference)	−0.5±0.5dB

- Rated frequency response -
(VHS NR: "ON")

1kHz	12kHz
0dB (Reference)	$-0.0^{+1.5}_{-3.5}$dB

No.	Item	Check point	Adjustment	Signal	Mode	Check and Adjustment
7	**Full erase frequency**	TP403 (AUDIO-1) ↓ Frequency counter	T405 (AUDIO-1) **TP403 : 70±3kHz**	No input signal	REC VHS	1) Adjust T405 so that frequency at TP403 becomes 70kHz.
8	**BR-S822 Audio insert erase voltage**	TP401 (AUDIO-1) ↓ Oscilloscope	T403 (AUDIO-1) **Lch erase level : Maximum**	No input signal	AUD-1 INSERT VHS	1) Perform the AUD-1 insert editing. 2) Adjust T403 to maximize erase level at TP401 (more than 200mVp-p). ***Note** After this adjustment, repeat the AUD-1 insert editing while confirming the erase level being the same as adjusted in the step 2).*
		TP402 (AUDIO-1) ↓ Oscilloscope	T404 (AUDIO-1) **Rch erase level : Maximum**	No input signal	AUD-2 INSERT VHS	3) Perform the AUD-2 insert editing. 4) Adjust T404 to maximize erase level at TP402 (more than 200mVp-p.) ***Note** After this adjustment, repeat the AUD-2 insert editing while confirming the erase level being the same as adjusted in the step 4).*
	BR-S622 Audio postrecording voltage	TP402 (AUDIO-1) ↓ Oscilloscope	T404 (AUDIO-1) **Rch erase level : Maximum**	No input signal	AUDIO DUB VHS	1) Perform audio dubbing (postrecording). 2) Adjust T404 to maximize erase level at TP402 (more than 200mVp-p). ***Note** After this adjustment, repeat the audio dubbing operation while confirming the erase level being the same as adjusted in the step 2).*
		TP401 (AUDIO-1) ↓ Oscilloscope	T403 (AUDIO-1)	No input signal	REC VHS	3) Adjust T403 to maximize erase level at TP401. ***Note** After this adjustment, set the deck to the REC mode again while confirming the erase level being the same as adjusted in the step 3).*

No.	Item	Check point	Adjustment	Signal	Mode	Check and Adjustment
9	**BR-S822 Normal audio insert crosstalk cancel**	N. AUDIO OUT (600Ω terminator)	R302 (AUDIO-1)	1kHz/ −6dBs ↓ N. AUDIO IN **Rch output level : Minimum**	AUD-1 INSERT VHS	1) Perform AUD-1 insert editing with a tape on which no audio signal is recorded. 2) Adjust R302 to minimize output level on R-ch. ***Note** For this adjustment, use a tape on which normal audio signal is not recorded.*
			R301 (AUDIO-1)	1kHz/ −6dBs ↓ N. AUDIO IN **Lch output level : Minimum**	AUD-2 INSERT VHS	3) Perform AUD-2 insert editing with a tape on which no audio signal is recorded. 4) Adjust R301 to minimize output level on L-ch. ***Note** For this adjustment, use a blank tape on which any signal is not recorded.*
			R320 L302 (AUDIO-1)	10kHz/ −6dBs ↓ N. AUDIO IN **Rch output level : Minimum**	AUD-1 INSERT VHS	5) Perform AUD-1 insert editing with a tape on which no audio signal is recorded. 6) Adjust R320 and L302 to minimize output level on R-ch. ***Note** Repeat the above steps 5), 6) and 7), 8) until respective output levels are minimized.*
			R319 L301 (AUDIO-1)	10kHz/ −6dBs ↓ N. AUDIO IN **Lch output level : Minimum**	AUD-2 INSERT VHS	7) Perform AUD-2 insert editing with a tape on which no audio signal is recorded. 8) Adjust R319 and L301 to minimize output level on L-ch. ***Note** Repeat the above steps 5), 6) and 7), 8) until respective output levels are minimized.*
	BR-S622 Normal audio post-recording crosstalk cancel	N. AUDIO OUT (600Ω terminator)	R301 (AUDIO-1)	1kHz/ −6dBs ↓ N. AUDIO IN **Lch output level : Minimum**	AUDIO DUB VHS	1) Perform audio dubbing (postrecording) with a tape on which no audio signal is recorded. 2) Adjust R301 to minimize output level on L-ch.
			R319 L301 (AUDIO-1)	10kHz/ −6dBs ↓ N. AUDIO IN **Lch output level : Minimum**	AUDIO DUB VHS	3) With the 10kHz/−6dBs signal input, perform audio dubbing (postrecording). 4) Adjust R319 and L301 to minimize output level on L-ch.

No.	Item	Check point	Adjustment	Signal	Mode	Check and Adjustment
10	**BR-S822 Normal Audio insert bias trap**	TP7 (AUDIO-1) ↓ Oscilloscope	L9 (AUDIO-1) **TP7 : Minimum**	No input signal	AUD-2 INSERT VHS	1) Perform AUD-2 (R-ch) insert editing. 2) Adjust L9 to minimize bias level (70kHz) at TP7.
		TP8 (AUDIO-1) ↓ Oscilloscope	L10 (AUDIO-1) **TP8 : Minimum**	No input signal	AUD-1 INSERT VHS	3) Perform AUD-1 (L-ch) insert editing. 4) Adjust L10 to minimize bias level (70kHz) at TP8.
	BR-S622 Normal audio	TP7 (AUDIO-1) ↓ Oscilloscope	L9 (AUDIO-1) **TP7 : Minimum**	No input signal	AUDIO DUB VHS	1) Perform audio dubbing. 2) Adjust L9 to minimize bias (70kHz) at TP7.
11	**BR-S822 Time code bias trap**	TP601 (AUDIO-1) ↓ Oscilloscope	L601 (AUDIO-1) **TP601 : Minimum**	No input signal	AUD-1 INSERT VHS	1) Make sure of MEMORY switch No.206(AUD-2/LTC) being set to "LTC". 2) Perform AUD-1 insert editing. 3) Adjust L601 to minimize level at TP601. 4) After the adjustment, return the MEMORY switch to "AUD-2" position.
12	**Hi-Fi audio carrier frequency**	TP3 (AUDIO-3) ↓ Frequency counter	R63 (AUDIO-3) **Lch carrier frequency : 1.400±0.002MHz**	No input signal	REC VHS	1) Turn on the HiFi REC switch. 2) Adjust R63 so that frequency at TP3 becomes 1.400MHz.
		TP4 (AUDIO-3) ↓ Frequency counter	R64 (AUDIO-3) **Rch carrier frequency : 1.800±0.002MHz**	No input signal	REC VHS	3) Adjust R64 so that frequency at TP4 becomes 1.800MHz.
13	**Hi-Fi audio FM output level**	A-RF terminal (Front panel) ↓ Oscilloscope	R11 (FMA PRE/AMP) **A-RF terminal : 100mVp-p**	MH-F8	PB	1) Adjust R11 so that FM output level at the A-RF terminal inside the front panel becomes 100mVp-p. ***Note If there is level difference in two channels, adjust the level by the channel having the lower level. Adjust the TRACKING VR to the best tracking position.***

No.	Item	Check point	Adjustment	Signal	Mode	Check and Adjustment
14	**Hi-Fi audio PB level**	HiFi AUDIO OUT (600Ω terminator) **Hi-Fi audio PB level : −6.0dBs**	R3 (Lch) R4 (Rch) (AUDIO-3)	MH-F8 (1kHz)	PB	1) With the alignment tape MH-F8 being played back, adjust R3(L-ch) and R4(R-ch) so that playback level of the 1kHz signal is −6.0dBs. ***Note Adjust the TRACKING VR to the best tracking position.***
15	**Hi-Fi audio REC FM level**	TP1 (FM A PRE/AMP) ↓ Oscilloscope 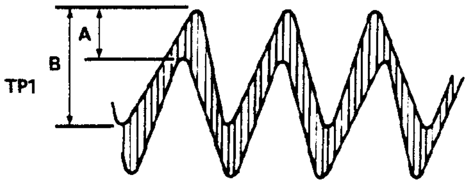 **A : 60mVp-p(R159)** **B : 220mVp-p(R160)**	R159 R160 (AUDIO-3)	No input signal	REC VHS	1) Make sure of the MEMORY switch No.200 (HiFi REC) being set to "ON". 2) Referring to the figure on the left, adjust R159 and R160 alternately so that the portion "A" becomes 60mVp-p while the portion "B" becomes 220mVp-p.
16	**Hi-Fi audio REC/PB level**	HiFi AUDIO OUT (600Ω terminator)	R55 (Lch) R56 (Rch) (AUDIO-3)	1kHz/ −6dBs ↓ HiFi AUDIO IN	REC VHS ↓ PB	1) Make sure of the MEMORY switch No.200 (HiFi REC) being set to "ON". 2) Record the 1kHz/−6dBs signal and play it back. 3) Confirm that playback level of the recorded signal is −6.0±0.5dBs on the both channels and level difference between channels is within 0.5dB. 4) If the playback level is out of the specifications, roughly adjust R55(L-ch) and R56(R-ch) and repeat the previous steps 2) and 3) to meet the specifications.
					REC S-VHS ↓ PB	1) Repeat the above steps 2) and 3) in the S-VHS mode, and confirm that the level is −6.0±1.0dBs on the both channels and level difference between channels is within 0.5dB.

Hi-Fi audio REC/PB level
(Level difference between R & L channel: within 0.5dB)

VHS	**−6.0±0.5dBs**
S-VHS	**−6.0±1.0dBs**

3. 4 VIDEO CERCUIT

Note • Confilm that the VIDEO OUT switch is set to "EDIT" position.
• Set the S1 on the OUTPUT board to "MANU" position.

No.	Item	Check point	Adjustment	Signal	Mode	Check and Adjustment
1	**VCXO**	TP1 (4fsc) ↓ Digital Voltmeter	R1 (4fsc) **TP1 : 2.0V$_{DC}$**	No input signal	E-E	1) Adjust R1 to obtain 2.0V$_{DC}$ as the level.
2	**AGC**	VIDEO OUT (75Ω terminator) 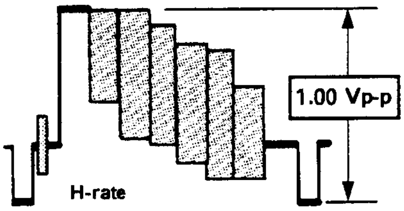 	R2: 7B (Y COMB)	Color bar	E-E	1) Confirm that the AGC switch is set to "ON". 2) Adjust R2 so that signal level at the VIDEO OUTPUT terminal is 1.00Vp-p.
3	**Video input level**	VIDEO OUT (75Ω terminator) 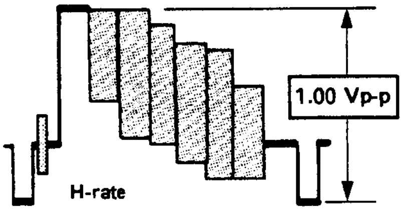 	R1: 8C (Y COMB)	Color bar	E-E	1) Turn off the AGC switch. 2) Make sure that the VIDEO LEVEL VR is set to the center click position. 3) Adjust R1 so that signal level at the VIDEO OUTPUT terminal is 1.00Vp-p. 4) Turn on the AGC switch.
4	**Y/C 443 Y input level**	VIDEO OUT (75Ω terminator) 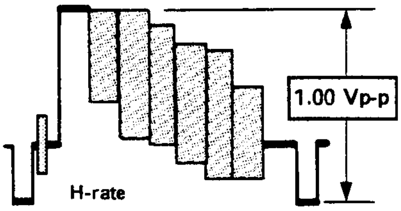 	R3: 5B (Y COMB)	Color bar ↓ Y/C 443	E-E	1) Set the VIDEO INPUT switch to "Y/C 443" position. 2) Adjust R3 so that signal level at the VIDEO OUTPUT terminal is 1.00Vp-p. ***Note Measure the level at a dense portion of the sync-tip.***

No.	Item	Check point	Adjustment	Signal	Mode	Check and Adjustment
5	**E-E Color input level**	VIDEO OUT (75Ω terminator) ↓ Vectorscope 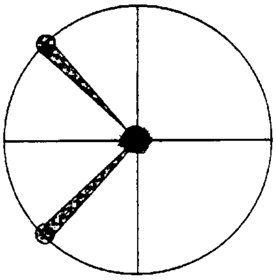 **Adjust R6 to equalize level of the luminous point of the burst signal with the level of the input color bar signal**	R6: 1H (Y COMB)	Color bar	E-E	1) Input the color bar signal directly to the vectorscope. While adjusting the GAIN control so that the burst level crosses the scope's circumference. 2) Connect the vectorscope with the VIDEO OUTPUT terminal and supply the color bar signal to the LINE INPUT terminal. 3) Set the VIDEO INPUT switch to the "LINE" position. 4) Adjust R6 to equalize level of the luminous point of the burst signal with the level of the reference color bar signal.
6	**VIDEO LEVEL METER**	VIDEO LEVEL METER 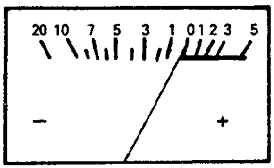 	R4: 5B (Y COMB)	Color bar	E-E	1) Set the METER SELECT switch to the "VIDEO" position. 2) Adjust R4 so that the LEVEL METER reads "0".
7	**Sub-emphasis input level**	TP1: 4G (R/P Y) 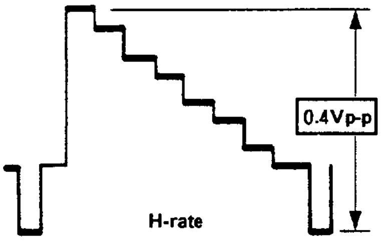 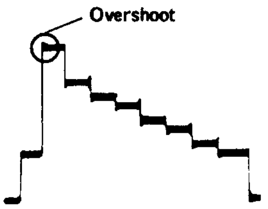 	R1: 15 (R/P Y)	Color bar	E-E	1) Adjust the level at TP1 to be 0.4Vp-p by R1. 2) With the VIDEO OUT switch set to the "NORM" position, confirm that shoot is observed in the leading edge of the waveform. 3) Set the VIDEO OUT switch to the "EDIT" position.

No.	Item	Check point	Adjustment	Signal	Mode	Check and Adjustment
8	**Carrier & Deviation**	TP4: 6C (R/P Y)	R5: 4E (Carrier) R3: 4G (Deviation) (R/P Y)	Color bar	E-E S-VHS	***Note** This adjustment needs the carrier checker (PGJ05008-2).* 1) Make sure of the REC MODE switch being set to the "S-VHS" position . 2) Connect the carrier checker and an oscilloscope as shown in the figure. 3) Set the carrier checker for S-VHS mode and set the DEVI/BAL switch to the "DEVI" position. 4) Align the sync tip with the lower marker with R5, while align the 100% white with the upper marker with R3. ***Note** Confirm that both the sync-tip and the 100% white are aligned with the markers respectively.*

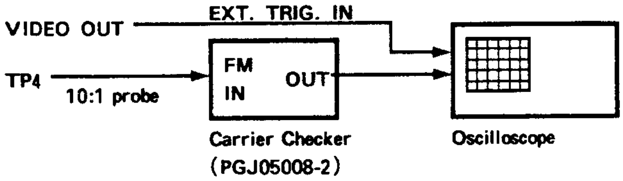

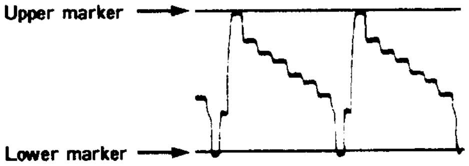

No.	Item	Check point	Adjustment	Signal	Mode	Check and Adjustment
			R6: 3E (Carrier) R2: 15H (Deviation) (R/P Y)	Color bar	E-E VHS	5) Set the REC MODE switch to the "VHS" position. 6) In the same manner as the above step 4), use R6 and R2 to align the sync tip and the 100% white with the lower and upper markers respectively. 7) Return the REC MODE switch to the "S-VHS" position.

MODE	CARRIER		DEVIATION
	SYNC TIP	100%WHITE	
S-VHS	5.4MHz	7.0MHz	1.6MHz
VHS	3.8MHz	4.8MHz	1.0MHz

No.	Item	Check point	Adjustment	Signal	Mode	Check and Adjustment
9	**White & Dark clip**	TP3: 4B (R/P Y)	R9: 5E (White clip) R7: 4E (Dark clip) (R/P Y)	Pulse & bar	E-E S-VHS	1) Adjust the oscilloscope's GAIN VR to set the portion between the sync tip and the 100% white for 4.0 scale divisions on the scope. 2) In the above condition, adjust R9 so that the white clip is for 4.4 scale divisions (210%) while adjust R7 so that the dark clip is for 2.8 scale divisions. (70%)

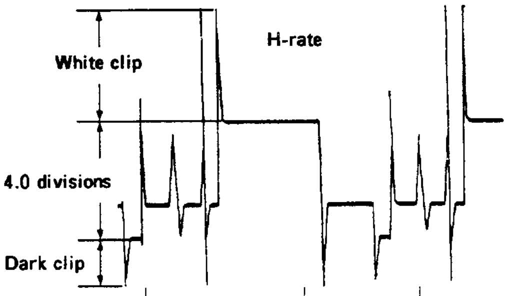

No.	Item	Check point	Adjustment	Signal	Mode	Check and Adjustment
			R10: 4E (White clip) R8: 4D (Dark clip) (R/P Y)	Pulse & bar	E-E VHS	3) Set the REC MODE switch to the "VHS" position. 4) In the same manner as the above steps 1) and 2), adjust the white clip to be for 4.0 scale divisions (200%) with R10 and the dark clip to be for 2.0 scale divisions (50%) with R8.

MODE	White clip	Dark clip	Sync tip — 100%White
S-VHS	4.4 divisions	2.8 divisions	4.0 divisions
VHS	4.0 divisions	2.0 divisions	4.0 divisions

No.	Item	Check point	Adjustment	Signal	Mode	Check and Adjustment
10	**S-VHS mode detection (PB mode)**	TP7: 1A (R/P ADJ) 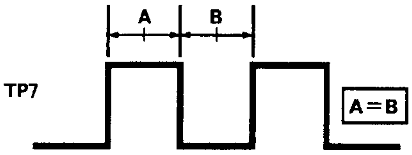	R17: 1A (R/P ADJ)	Sine wave (5.0MHz) ↓ TP6: 2A (R/P ADJ)	E-E	1) Make shortcircuits between TP5(:1A) and TP GND4(:1A) as well as TP8(:2A) and TP9(:1A) on the R/P ADJUST BOARD. 2) Supply 5.0MHz/200mVp-p sine wave to TP6. ***Note At that time,do not use TP GND6.*** 3) Adjust R17 so that the duty factor at TP7 is fifty-fifty (A=B in the figure).
11	**Modulation balance**	TP8: 11G (R/P Y) 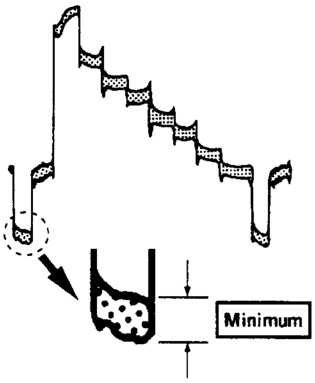	R14: 1F R15: 2G (R/P Y)	Color bar	REC S-VHS ↓ PB	1) Adjust R14 and R15 alternately to minimize carrier leak in the sync tip portion of the waveform at TP8.
12	**PB sub-demphasis**	TP1: 4G (R/P Y) 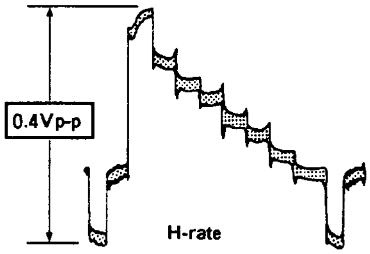	R11: 9G (R/P Y)	Color bar	REC S-VHS ↓ PB	1) Adjust R11 to obtain 0.4 Vp-p as the level at TP1.

No.	Item	Check point	Adjustment	Signal	Mode	Check and Adjustment
13	**RF equalizer**	Y/C 443 •Y OUT (75Ω terminator)	R13: 5E(CH1) R14: 5E(CH2) (R/P ADJ)	MBVE-3H	PB S-VHS	1) Confirm that the VIDEO OUT switch is set to "EDIT" and the PB Y ENHANCE switch is set to "0 dB". 2) With the alignment tape MBVE-3H being played back, adjust the TRACKING VR to the best tracking position. 3) Adjust the oscilloscope's GAIN control to set the 100kHz signal level for 5.0 scale divisions on the scope. ***Note Turn off the oscilloscope's 20MHz filter.*** 4) Adjust R13 and R14 so that the 3.0MHz signal level becomes for 4.7 scale divisions (−0.5dB) respectively.
		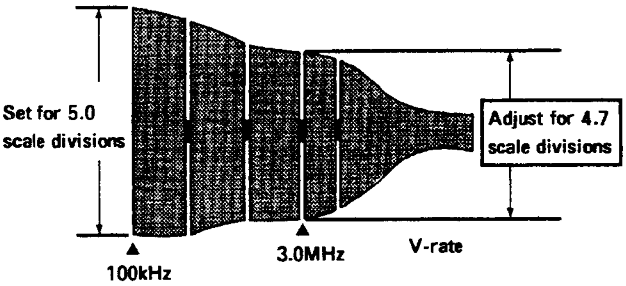 Set for 5.0 scale divisions Adjust for 4.7 scale divisions 100kHz 3.0MHz V-rateTRIG : D-FF ⊖SLOPE(CH1), ⊕SLOPE(CH2)				
			R15: 2E(CH1) R16: 2E(CH2) (R/P ADJ)	MHVE-3 or MH-8	PB VHS	5) In the same manner as the above procedure, play back the MHVE-3 tape and set the 100kHz signal level for 5.0 scale divitions on the oscilloscope. 6) Adjust R15 and R16 so that the 2.0MHz signal level is for 4.0 scale divisions (−2.0dB) respectively.
		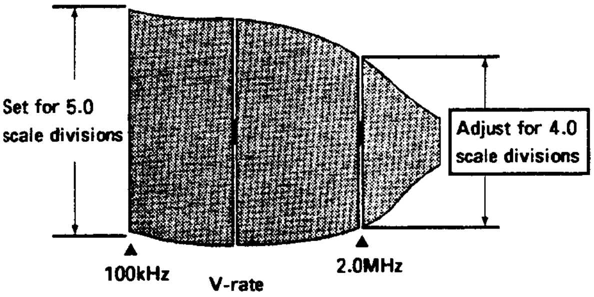 Set for 5.0 scale divisions Adjust for 4.0 scale divisions 100kHz V-rate 2.0MHzTRIG : D-FF ⊖SLOPE(CH1), ⊕SLOPE(CH2)				

No.	Item	Check point	Adjustment	Signal	Mode	Check and Adjustment
14	**REC** **FM level**	TP4: 3E (R/P ADJ) 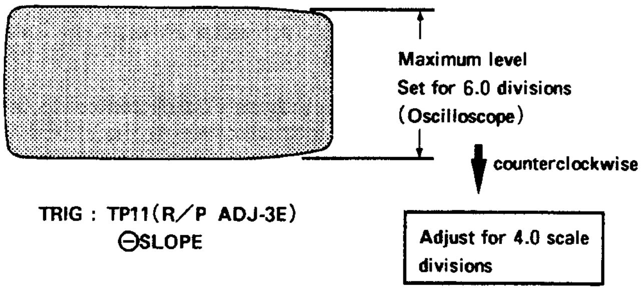 Maximum level Set for 6.0 divisions (Oscilloscope) counterclockwise Adjust for 4.0 scale divisions TRIG : TP11(R/P ADJ-3E) ⊖SLOPE	R8: 4B(CH1) R7: 4B(CH2) (R/P ADJ)	5 step (nonburst)	RAP S-VHS	1) Set the switch S1 the R/P ADJUST board to "RAP" for the RAP mode while S2 on the same board to "RAP 1"(CH 1). 2) Adjust R8 so that the FM level of TP4 becomes maximum. 3) Adjust the oscilloscope's GAIN control to set the FM level for 6.0 scale divisions on the scope. 4) Adjust R8 so that the FM level becomes 4.0 scale divisions. 5) Set the switch S2 to the "RAP 2" (CH2). 6) In the same as above for RAP 1 mode, adjust R7 to set the FM level to 4.0 scale divisions. 7) Set the switch S1 to "NOR".
		TP2: 4C (R/P ADJ) 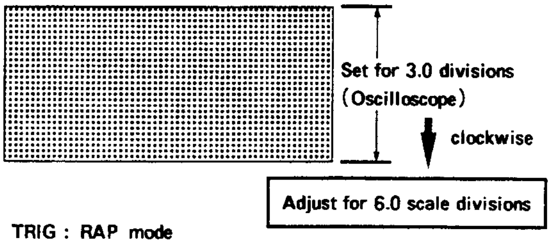 Set for 3.0 divisions (Oscilloscope) clockwise Adjust for 6.0 scale divisions TRIG : RAP mode TP11(R/P ADJ-3E) ⊖SLOPE REC/PB mode D-FF ⊖SLOPE(CH1) ⊕SLOPE(CH2)	R8: 4B(CH1) R7: 4B(CH2) (R/P ADJ)	5 step (nonburst)	REC S-VHS	8) Adjust the oscilloscope's GAIN control to set the TP2's level for 3.0 scale divisions. 9) Adjust the R8 and R7 so that the FM level becomes 6.0 scale divisions.
		TP4: 3E (R/P ADJ)	R6: 4B(CH1) R5: 5B(CH2) (R/P ADJ)	5 step (nonburst)	RAP VHS	10) In the same as above for S-VHS mode, adjust the oscilloscope's GAIN control to set the TP4's maximum level to 6.0 scale divitions respectively in the VHS mode. 11) Adjust R6 and R5 to set the FM level to 4.0 scale divisions.
		TP2: 4C (R/P ADJ)	R6: 4B(CH1) R5: 5B(CH2) (R/P ADJ)	5 step (nonburst)	REC VHS	12) Adjust the oscilloscope's GAIN control to set the TP2's level for 3.0 scale divisions. 13) Adjust the R6 and R5 so that the FM level becomes 6.0 scale divisions.

No.	Item	Check point	Adjustment	Signal	Mode	Check and Adjustment
15	**REC frequency response** - RAP mode - 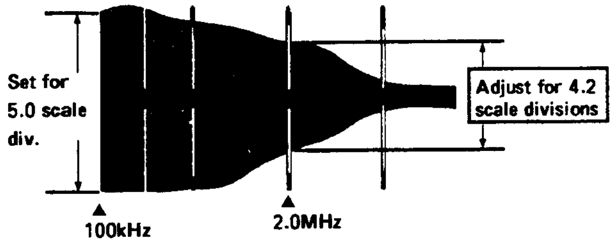 TRIG : TP11(R/P ADJ-3E) ⊖SLOPE - REC/PB mode - 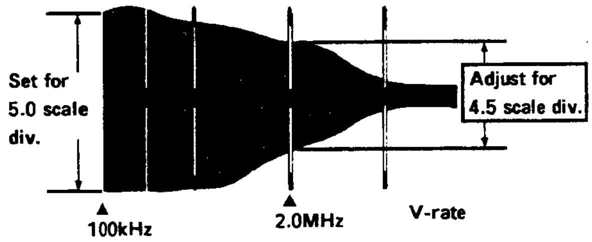 TRIG : D-FF ⊖ SLOPE(CH1), ⊕ SLOPE(CH2)	Y/C 443 •Y OUT (75Ω terminator)	R3: 5E(CH1) R4: 5E(CH2) (R/P ADJ)	Sweep (nonburst) ↓ Y/C 443 •Y IN	**RAP** VHS	1) Confilm that the VIDEO OUT switch is set to "EDIT" position. 2) S1 on the R/P ADJUST board to "RAP" for the RAP mode while S2 on the same board to "RAP1"(CH1). 3) Supply a sweep signal to the Y terminal of the Y/C 443 INPUT connector through the 7pin input cable. 4) Adjust the oscilloscope's GAIN control to set the 100kHz signal level observed at the VIDEO OUT terminal for 5.0 scale divisions on the scope screen. At that time, trigger the oscilloscope with signal from TP11 and set it for minus ⊖ slope. 5) Adjust R3 to set the 2.0MHz signal level for 4.2 scale divisions (−1.5dB) on the scope screen. 6) Set the switch S2 on the R/P ADJUST board to "RAP2" (CH2) position. 7) In the same manner as S2 is set to "RAP1", adjust the 2.0MHz signal level for 4.2 scale divisions with R4 as the 100kHz signal level is set for 5.0 scale divisions.
					REC VHS ↓ PB	8) Set the S2 on the Y COMB board and S1 on the R/P ADJUST board to "NOR" respectively. 9) Record the sweep signal and play it back. 10) As the 100kHz signal level is set for 5.0 scale divisions, confirm that the 2.0MHz signal level is for 4.5 scale divisions (−1.5 dB) on CH1 and CH2 respectively. ***Note** If the step 10) does not meet the specifications, repeat the previous steps 4) through 7) until a satisfactory result is obtained.*
	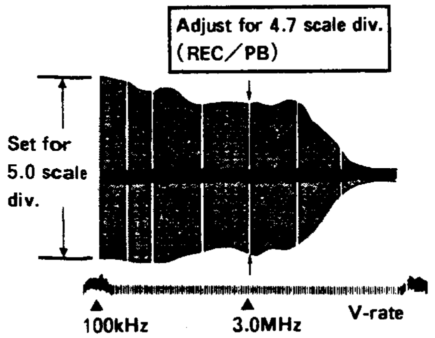 TRIG : RAP mode TP11(R/P ADJ-3E) ⊖SLOPE REC/PB mode D-FF ⊖SLOPE(CH1) ⊕SLOPE(CH2)		R1: 6E(CH1) R2: 6E(CH2) (R/P ADJ)	Sweep (nonburst) ↓ Y/C 443 •Y IN	**RAP** S-VHS	11) Set the switch S1 on the OUTPUT board to "MANU" position. 12) Referring to the above procedure for the VHS mode, perform the same adjustment for the S-VHS mode. 13) As the 100kHz signal level is set for 5.0 scale divisions in the RAP1 board, adjust R1 so that the 3.0MHz signal level is for 4.5 scale divisions. 14) In the same manner, adjust R2 so that the 3.0MHz signal level is for 4.5 scale divisions in the RAP2 mode.
					REC S-VHS ↓ PB	15) Change switch settings to the NOR mode from the RAP mode. 16) Record the sweep signal and play it back to confirm that the 3.0MHz signal level is for 4.7 scale divisions as the 100kHz signal level is set for 5.0 scale divisions. ***Note** If out of the specifications, repeat the adjustment for the S-VHS RAP mode and then proceed to the step 16). Since there are two best points obtained by adjusting R1 and R2 turn it full counterclockwise first and then return clockwise to find the best adjustment point for the first time.*

No.	Item	Check point	Adjustment	Signal	Mode	Check and Adjustment
16	**TRACKING METER**	TRACKING METER	R13: 2B (R/P Y) 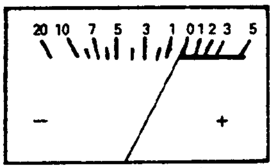	Color bar	REC S-VHS ↓ PB	1) Make sure of the TRACKING VR being set to the center click position. 2) Record the color bar signal and play it back. Reading the TRACKING METER head-on, adjust R13 so that the indicator points at "0".
17	**Y output level**	VIDEO OUT (75Ω terminator) 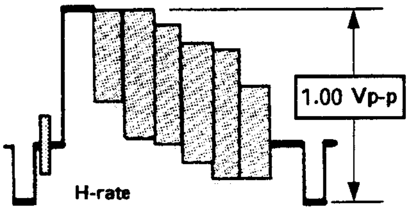	R4:4I (R/P Y)	Color bar	REC S-VHS ↓ PB	1) Adjust R4 so that Y level at the VIDEO OUT terminal is 1.00 Vp-p.
			R12: 10I (R/P Y)	Color bar	REC VHS ↓ PB	1) Adjust R12 to obtain 1.00 Vp-p as Y level at the VIDEO OUT terminal in the VHS mode as well as the S-VHS mode.
18	**PB VCO**	TP5: 13H (R/P C) TP5 : 2.2V$_{DC}$	C77: 12G (R/P C)	MHVE-2H	PB	1) With the alignment tape MHVE-2H being played back, adjust the TRACKING VR to the best tracking position. 2) Adjust C77 so that DC level at TP5 becomes 2.2 V$_{DC}$.
19	**PB subcarrier**	TP6: 12F (R/P C) ↓ Frequency counter	R9: 12F (R/P C) TP6 : 4.433619MHz±5Hz	MHVE-2H	PB	1) With the alignment tape MHVE-2H being played back, adjust the TRACKING VR to the best tracking position. 2) Adjust R9 so that frequency at TP6 becomes 4.433619 MHz.
20	**E-E Pilot Burst phase**	TP4: 8I (R/P C) 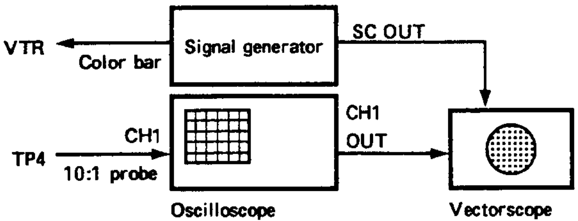 VTR Color bar Signal generator SC OUT CH1 TP4 10:1 probe CH1 OUT Oscilloscope Vectorscope 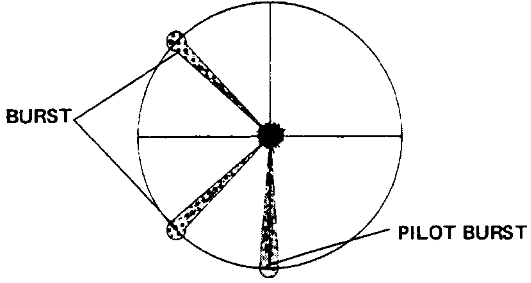	R8: 6I (R/P C)	Color bar	E-E	1) Connect the oscilloscope's CH1 input to TP4 on the R/P COLOR board. 2) Supply the scope's CH1 output to a vectorscope while supplying S.C. output of a signal generator to its EXT. REF terminal. 3) Adjust the phase of the burst signal by the PHASE VR so that the signal is normally positioned in the vectorscope screen. 4) Adjust the level of the burst signal by the LEVEL VR so that the burst signal level accords with the circumference of the vectorscope screen. 5) Adjust R8 so that the phase of the pilot burst signal meets the U axis at an angle of 270° (in a downward direction).

No.	Item	Check point	Adjustment	Signal	Mode	Check and Adjustment
21	**REC color level**	TP3:1C (R/P ADJ)	R12: 4B(CH1) R11: 5B(CH2) (R/P ADJ)	MHVE-2H	PB	***Note For grounding of this adjustment, use any TPGND6 other than TP GND.*** 1) Play back the MHVE-2H alignment tape. ***Note Adjust the TRACKING VR to the best tracking position.*** 2) Adjust the oscilloscope's GAIN control to set the CH1 output level at TP3 for 4.0 scale divisions.
	- MHVE-2H PB - 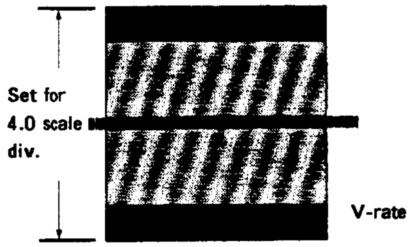 **TRIG : D-FF ⊖ SLOPE(CH1), ⊕ SLOPE(CH2)** **- REC/PB mode -** 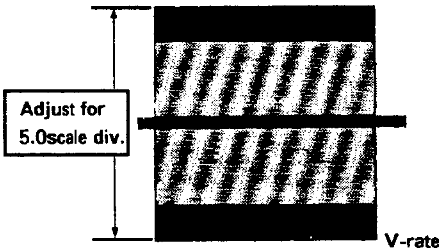 **TRIG : D-FF ⊖ SLOPE(CH1), ⊕ SLOPE(CH2)**			Color bar	REC S-VHS ↓ PB	3) Record the color bars signal and play it back. 4) Adjust R12 so that the level of waveform at TP3 is 5.0 scale divisions (+2dB as against the alignment tape) on the oscilloscope. If a satisfactory result cannot be obtained: a) Roughly turn R12. R12 ↻ : increases the colour level. b) Repeat the adjustments of the steps 3) and 4) of this item. 5) With the MHVE-2H alignment tape being played back, set the CH2 level for 4.0 scale divisions on the oscilloscope in the same manner as above. ***Note Adjust the TRACKING VR to the best tracking position.*** 6) Adjust R11 so that TP'3 level becomes for 5.0 scale divisions in the same manner as above. If a satisfactory result cannot be obtained : a) Roughly turn R11. R11 ↻ : increases the colour level. b) Repeat the adjustments of steps 5) and 6) of this item.
			R10: 4B(CH1) R9 : 4B(CH2) (R/P ADJ)	MHVE-2	PB	7) In the same manner as for the S-VHS mode, adjust for the VHS mode. 8) With the MHVE-2 alignment tape being played back, set CH1 and CH2 levels for 5.0 scale divisions respectively. ***Note Adjust the TRACKING VR to the best tracking position.***
	- VHS mode - 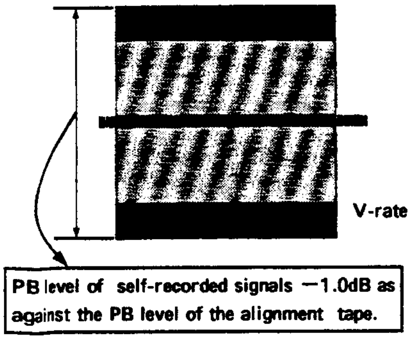 V-rate PB level of self-recorded signals −1.0dB as against the PB level of the alignment tape. **TRIG : RAP mode TP11(R/P ADJ-3E) ⊖SLOPE** **REC/PB mode D-FF ⊖SLOPE(CH1) ⊕SLOPE(CH2)**			Color bar	REC VHS ↓ PB	9) Record the color bar signal and play it back. 10) Adjust R10 and R9 so that TP3's level becomes for 4.5 scale divisions (−1.0dB) as against the level of the alignment tape on the both channels. If a satisfactory result cannot be obtained: a) Roughly turn R10(CH1) and R9(CH2). R10 (R9) ↻ : increases the colour level. b) Repeat the adjustments of steps 9) and 10) of this item.

No.	Item	Check point	Adjustment	Signal	Mode	Check and Adjustment
22	**DG COMP**	Y/C 443 OUT (75Ω terminator) ↓ Waveform monitor & Oscilloscope **- RAP mode -** **(Oscilloscope)** 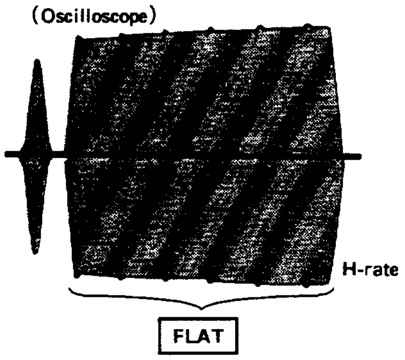 **TRIG : TP10(R/P ADJ-3E)** **⊖SLOPE**	R23:8E(CH1) R22:8E(CH2) (R/P C)	Mod. 5step	RAP S-VHS	1) Set the switch S1 on the R/P ADJ board to the "RAP" position to realize the RAP mode while setting the switch S2 to "RAP1"(CH1) position. ***Note In the RAP mode, trigger the oscilloscope with signal of TP10 (on minus slope).*** 2) Connect the Y/C OUT terminal with the scope. 3) Adjust R23 to flatten the CH1 waveform(See the left figure). 4) Set the switch S2 to the "RAP2"(CH2) position. 5) Adjust R22 to make the CH2 waveform the same as the CH1 waveform (flat waveform).
					REC S-VHS ↓ PB	6) Connect a waveform monitor with the Y/C 443 OUT terminal, and confirm that the levels in the odd field and the even field are the same (see the lower left figure). 7) If there is a difference in the levels, decline the REC FM level of the channel having the higher level and again adjust the REC color level. (Refer to Items No. 14 and No. 21.) ***Note*** - ***In the above adjustment, make sure to decline the REC FM level within 2.0dB compared as the original level. (In other words, when the original level is for 5.0 scale divisions of the oscilloscope, make sure not to decline the level lower than 4.0 scale divisions.)*** - ***When the adjustment of the Item No. 14 "REC FM level" was carried out, the Item No. 21 "REC color level" must be checked again. If so, this item must be checked again after the recheck of the Item No.21.***
			R7: 9E(CH1) R6: 9E(CH2) (R/P C)	Mod. 5step	RAP VHS	8) Set the REC MODE switch to the "VHS" position. 9) In the same manner as for the S-VHS mode, flatten the CH1 and CH2 waveforms in the DG by R7(CH1) and R6(CH2).
		- REC/PB mode - **(Waveform monitor)** 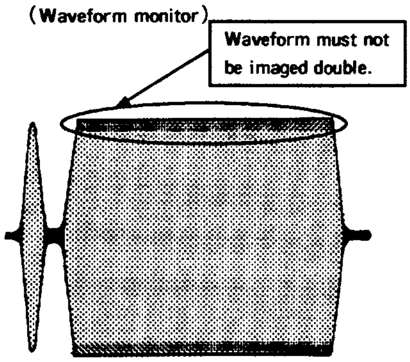 **TRIG : Y OUT**			REC VHS ↓ PB	10) Confirm that the levels in the odd field and the even field are the same (see the left figure). 11) If there is a difference in the levels, decline the REC FM level of the channel having the higher level and again adjust the REC color level. (Refer to Items No. 14 and No. 21.) ***Note*** - ***In the above adjustment, make sure to decline the REC FM level within 2.0dB compared as the original level. (In other words, when the original level is for 5.0 scale divisions of the oscilloscope, make sure not to decline the level lower than 4.0 scale divisions.)*** - ***When the adjustment of the Item No. 14 "REC FM level" was carried out, the Item No. 21 "REC color level" must be checked again. If so, this item must be checked again after the recheck of the Item No.21.***

No.	Item	Check point	Adjustment	Signal	Mode	Check and Adjustment
23	**E-E Pilot Burst level**	TP8: 3G (R/P C) 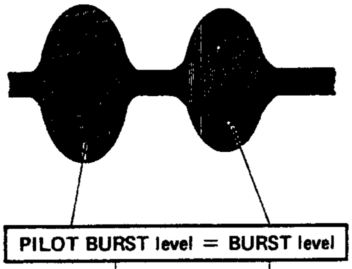	R10: 12F (R/P C)	Color bar	E-E	1) Adjust R10 to make the pilot burst level the same as the burst level.
24	**Color DOC**	TP33: 4D TP34: 4D (R/P C-2) 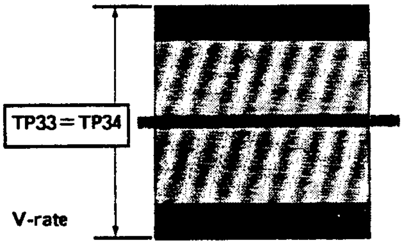	R22: 4D (R/P C-2)	Color bar	E-E	1) Turn on the oscilloscope's 20 MHz filter. 2) Adjust R22 to equalize waveform levels at TP33 and TP34.
25	**Crosstalk cancel**	TP39: 5D (R/P C-2) 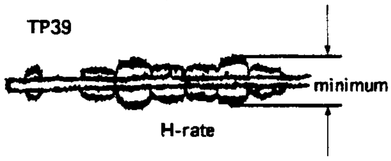	R23 : 4D L305: 2D (R/P C-2)	Color bar	REC S-VHS ↓ PB	1) Set the switch SW302(2C) on the R/P C-2 board to "ADJ" position. 2) Shortcircuit between TP38(4C) and GND on the R/P COLOR-2 board with a shorting wire. 3) Adjust R23 and L305 to minimize signal level (leakage of color component) at TP39. 4) Remove the shorting wire from TP38 and GND.
		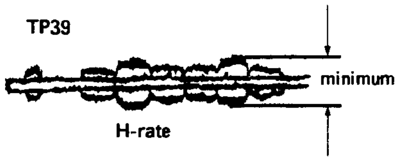	R24 : 4E L307: 2E (R/P C-2)	Color bar	REC S-VHS ↓ PB	5) Set the switch SW303 (R/P COLOR-2) to "ADJ" position. 6) Shortcircuit between TP38 and TP 5V2(5C) on the R/P COLOR-2 board with a shorting wire. 7) Adjust R3 and L12 to minimize signal level (leakage of color component) at TP39. 8) After the adjustment, remove the shorting wire TP38 and TP5V2. 9) After the adjustment return SW302 and SW303 to "NOR" position.

No.	Item	Check point	Adjustment	Signal	Mode	Check and Adjustment
26	**CNR**	TP39: 5D (R/P C-2) 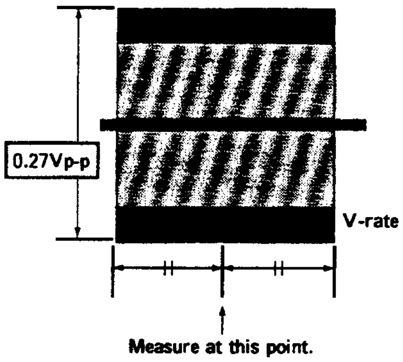	R25: 5D (R/P C-2)	Color bar	REC S-VHS ↓ PB	1) Set the VIDEO OUT switch to "NORM" position. 2) Adjust R25 so that signal level at TP39 becomes 0.27 Vp-p.
		TP40: 5E (R/P C-2) 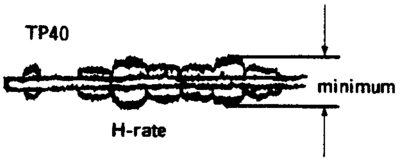	R26 : 6E L308: 6D (R/P C-2)	Color bar	REC S-VHS ↓ PB	3) Shortcircuit between TP42(6B) and GND on the R/P COLOR-2 board with a shorting wire. 4) Adjust R26 and L308 to minimize signal level (leakage of color component) at TP40. 5) After the adjustment, remove the shorting wire. 6) Set the VIDEO OUT switch to "EDIT" position.
27	**CNR feedback ratio**	TP40: 8A (R/P C-2) 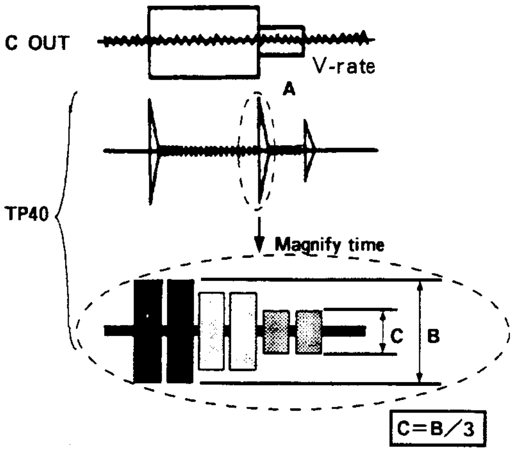 C OUT V-rate A TP40 Magnify time C B C=B/3	R27: 5E (R/P C-2)	MHVE-2	PB	1) Set the VIDEO OUT switch to "NOR" position. 2) Shortcircuit between TP42(6B) and GND on the R/P COLOR-2 board with a shorting wire. 3) Magnify the portion "A" of the waveform by the oscilloscope's time axis. 4) In the magnified view of the waveform, set the portion "B" (maximum amplitude) for 3.0 scale divisions on the oscilloscope with its GAIN control. 5) Adjust R6 so that the level "C" 2H after the maximum amplitude "B" becomes for 1.0 scale divisions. 6) After the adjustment, remove the shorting wire. 7) Set the VIDEO OUT switch to "EDIT" position.

No.	Item	Check point	Adjustment	Signal	Mode	Check and Adjustment
28	**PB Pilot Burst phase detct**	TP32: 5E (R/P C-2) 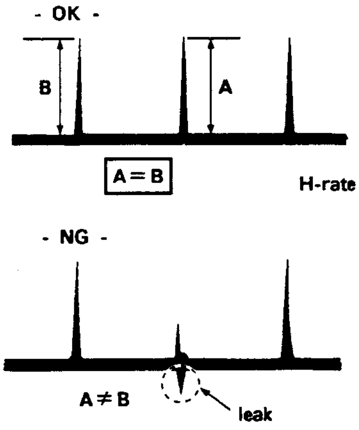	R21 :3B EQ301:3B (R/P C-2)	Color bar	REC S-VHS ↓ PB	1) Set the switch SW301(3A) on the R/P COLOR-2 board to the upper position. 2) Confirm that the waveform of TP32's signal is as shown in the upper left figure (pulse turns upwards). 3) If it turns in the contrary direction (downwards), set the switch SW301 on the R/P COLOR-2 board to the lower position. 4) Adjust R21 and EQ301 to equalize the levels of the "A" and "B" shown in the upper left figure to each other. ***Note*** • ***In the adjustment of the above step, make sure to do it not to leave any leak as shown in the lower left figure.*** • ***For adjustments of further steps, leave the switch S301 as it is set in the above procedure.***
29	**CRI equalizer**	TP6: 7H TP8: 7F (OUTPUT) 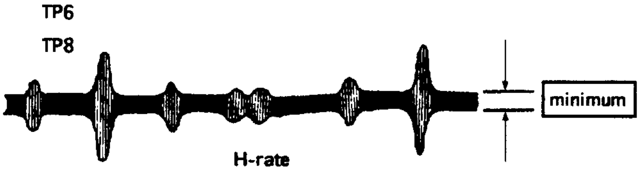	EQ1: 6H EQ2: 6G EQ3: 6F R8 : 5H (OUTPUT)	Color bar	REC S-VHS ↓ PB	1) Minimize signal level at TP6 with EQ1. 2) Shortcircuit between TP8 and TP9 on the OUTPUT board. 3) Adjust EQ2 so that signal level at TP8 becomes minimum. 4) Shortcircuit TP8 and TP7 on the OUTPUT board. 5) Adjust EQ3 and R8 to minimize signal level at TP8.
30	**AFC**	TP202 (Burst Gate) **TP202 : 7.812±0.100kHz**	R27 (Burst Gate)	No input signal	E-E	1) Adjust R27 to obtain 7.812kHz as frequency at TP202

No.	Item	Check point	Adjustment	Signal	Mode	Check and Adjustment
31	**REF. Burst**	VIDEO OUT (75Ω terminator) ↓ Vectorscope 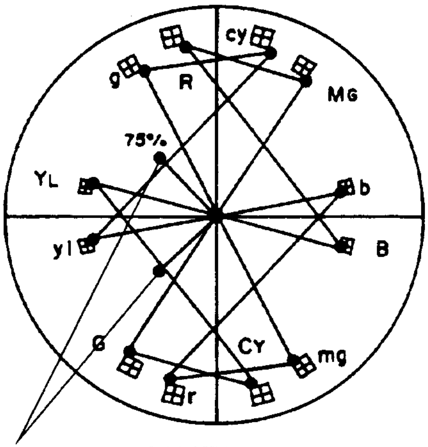 cy g R MG 75% YL b yl B G CY mg r **Equalize the levels of these two burst signals to each other by R21.** **Adjust R5 so that the phases of the two burst signals meet each other at an angle of 90° .**	R21: 8F R5 : 8F (R/P C)	Color bar	REC S-VHS ↓ PB	1) Set the switch SW1 on the BURST SW board to the "ON" position. 2) Make a shortcircuit between TP201 of the BURST GATE board and TPGND of the R/P C board. 3) Equalize the levels of these two burst signals to each other by R21. 4) Adjust R5 so that the phases of the two burst signals meet each other at an angle of 90° .
			R14 (level) R13 (phase) (BURST SW)	Color bar	REC S-VHS ↓ PB	5) Check the phase and level of the burst signal after removing the shorting wire. 6) Again shortcircuit TP201 and TPGND. 7) Check the phase and level of the burst signal and adjust R14(LEVEL) and R13(PHASE) so that they are the same as those measured after removing the shorting wire.
32	**Color output level**	VIDEO OUT (75Ω terminator) ↓ Vectorscope 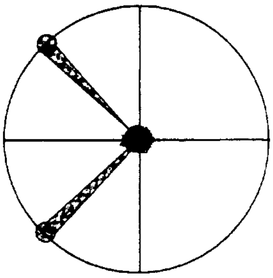 **Adjust R7 to equalize level of the luminous point of the burst signal with the level of the input color bar signal.**	R7: 51 (OUTPUT)	Color bar	REC S-VHS ↓ PB	1) Set the VIDEO OUT switch to "NORM" position. 2) Input the color bar signal directly to the vectorscope while adjusting the GAIN control so that the burst level crosses the scope's circumference. 3) With the vectorscope connected with the VIDEO OUT, supply the color bar signal to the VIDEO IN to record and play it back. 4) Adjust R7 so that the burst level is the same as in the step 2). 5) After the adjustment, return the VIDEO OUT switch to "EDIT" position.

No.	Item	Check point	Adjustment	Signal	Mode	Check and Adjustment
33	Auto equalizer	***Note :*** ***After confirming the setting of S1 on the Y COMB board, also check that the LED on the OUTPUT board is coming on during playback of the MBVE-14H before proceeding to the following steps.*** ***(If the LED is not lighting, check the switch S1 setting again.)***				
		Y/C 443 •Y OUT (75Ω terminator) 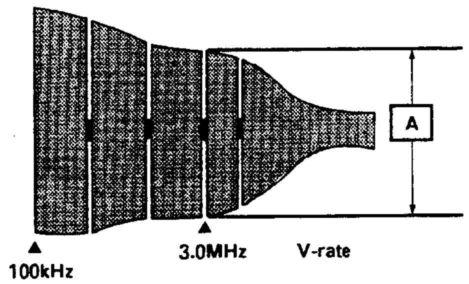 	R2: 9I (OUTPUT)	MBVE-14H	PB	1) Confirm that the VITC REC switch (SA-R22E) being set to "OFF". 2) Play back the alignment tape MBVE-14H. 3) With S1 on the OUTPUT board set to MANU position, measured the 3.0MHz signal level and regard the measured value as "A". 4) Set the switch S1 to the AUTO position. 5) Adjust R2 so that the 3.0MHz signal level is equal to "A". ***Note Since there are two best points obtained by adjusting R2, turn it full clockwise first and then return counterclockwise to find the best adjustment point for the first time.***
		TP1: 4G (R/P Y) 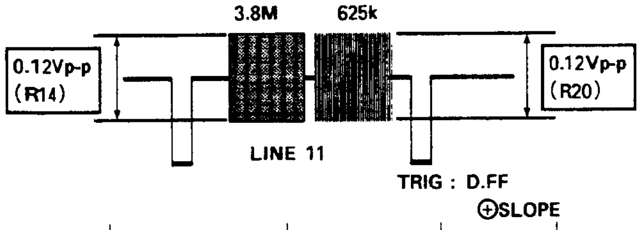 3.8M 625k 0.12Vp-p (R14) 0.12Vp-p (R20) LINE 11 TRIG : D.FF ⊕SLOPE	R14: 4I (3.8MHz) R20: 5E (625kHz) (R/P C)	Sweep (nonburst) ↓ Y/C 443 •Y IN	E-E	6) Input a video sweep signal through the Y IN terminal of the Y/C 443 connector. 7) Adjust R20 so that the reference signal impressed at the 11th line of TP1's waveform is 0.12Vp-p in the right side (625kHz side). On the other hand, adjust R14 so that the signal is 0.12Vp-p in the left side (3.8MHz side). ***Note Position of the reference signal depends on setting of the DIP switch S1 on the Y COMB board. (It is set in 11H line at shipment.)***
		VIDEO OUT (75Ω terminator) 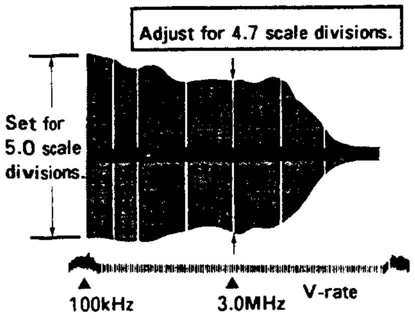 Adjust for 4.7 scale divisions. Set for 5.0 scale divisions. 100kHz 3.0MHz V-rate	R14: 4I (R/P C)	Sweep (nonburst) ↓ Y/C 443 •Y IN	REC S-VHS ↓ PB	8) Input a video sweep signal through the Y IN terminal of the Y/C 443 connector, and record and play it back. 9) Set the 100kHz signal level for 5.0 scale divisions on the oscilloscope by adjusting its GAIN control. 10) Adjust R14 so that the 3.0MHz signal level is for 4.7 scale divisions on the scope. ***Note If there is channel difference, adjust at the lager level. (channel difference is within 3dB)*** 11) After the whole adjustment, return S1 on the OUTPUT board to the "MANU" position.

No.	Item	Check point	Adjustment	Signal	Mode	Check and Adjustment
34	**Pilot Burst delete**	Y/C 443 •C OUT (75Ω terminator)	R19: 10C (R/P C)	Color bar	REC S-VHS ↓ PB	1) Adjust R19 to remove leak of the pilot burst as shown in the figure. ***Note** In this adjustment, make sure not to break the burst waveform.* 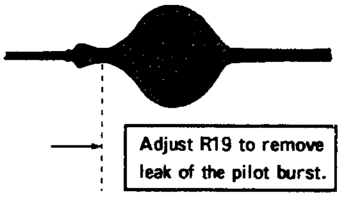
35	**S-VHS sideband comparator**	TP9: 3G (R/P C)	R11: 3C (R/P C)	Multi burst	E-E S-VHS	***Note** Since there are two best points obtained by adjusting R11 turn it full clockwise first and then return counterclockwise to find the best adjustment point for the first time.* 1) Short circuit between TP7(3B) and GND 3 on the R/P COLOR board with a shorting wire. 2) Set the burst level at TP9 for 5.0 scale divisions on the oscilloscope screen. ***Note** Turn on the oscilloscop's 20MHz filter.* 3) Remove the shorting wire. 4) Adjust R11 so that the burst level is for 4.0 scale divisions on the scope. 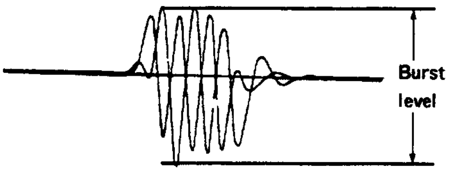 **TRIG : VIDEO OUT ⊖SLOPE**
36	**REC Y/C delay**	TP12: 14B TP10: 3E (R/P C)	R3: 2H (R/P C)	Pulse & bar	E-E S-VHS	1) Shortcircuit between TP7(3B) and GND3 on the R/P COLOR board with a shorting wire. 2) Mix outputs from TP10 and TP12 in the oscilloscope which is triggered with signal from TP12 at this time. 3) Adjust R3 so that the modulated 20T pulse waveform is symmetric in the base. 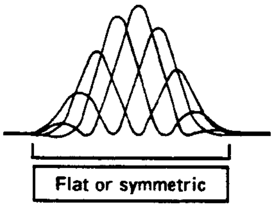
			R4: 1H (R/P C)	Pulse & bar	E-E VHS	4) In the same manner as above, adjust R4 to symmetrize the waveform in the base in the VHS mode. 5) After the adjustment, remove the shorting wire.

No.	Item	Check point	Adjustment	Signal	Mode	Check and Adjustment
37	**PB Y/C delay**	Y/C 443 OUT (75Ω terminator) 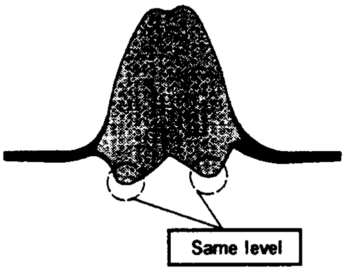 	R1: 141 (R/P C)	Pulse & bar	REC S-VHS ↓ PB	1) Mix Y and C outputs at the Y/C 443 OUT connector in the oscilloscope which is triggered with Y output. 2) Play back recorded pulse & bar signal, and adjust R17 to symmetrize the modulated 20T pulse in the base.
			R2: 51 (R/P C)	Pulse & bar	REC VHS ↓ PB	3) In the same manner as above, adjust R2 to symmetrize the modulated 20T pulse in the base in the VHS mode.
38	**2fc cancel**	Y/C 443 •Y OUT (75Ω terminator) 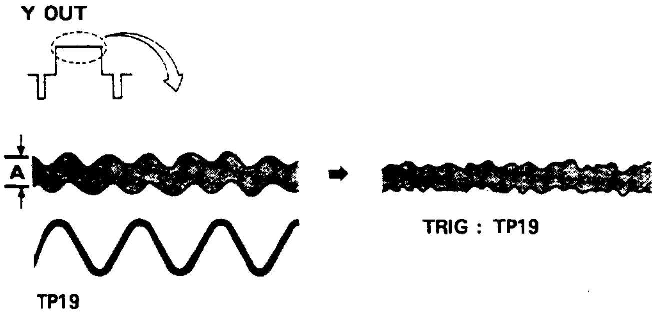 	R12: 2C (R/P C)	Yellow signal	RAP S-VHS	1) Set the VIDEO OUT switch to "NORM" position. 2) Set S1 on the R/P ADJUST board to "RAP" position for the RAP mode. 3) Adjust R12 to minimize the level "A" shown in the figure on the left. At that time, trigger the oscilloscope with signal from TP19(16H) on the R/P COLOR board.
			R13: 2B (R/P C)	Yellow signal	RAP VHS	4) In the same manner as above, adjust R13 to minimize the level "A" in the VHS mode, too. 5) Set S1 to "NOR" position.
39	**ADD V pulse**	VIDEO OUT (75Ω terminator) 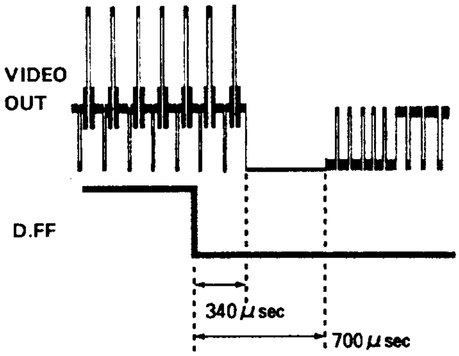 	R4: 7D R5: 6E (OUT PUT)	Color bar	REC S-VHS ↓ PB ↓ STILL	1) Turn off the TBC switch. 2) Record the color bar signal, and play it back in the STILL mode. 3) Adjust R4 and R5 to position the ADD V pulse as shown in the figure.

No.	Item	Check point	Adjustment	Signal	Mode	Check and Adjustment
40	**On screen**	TP13: 3B (AVM/ONS) ↓ Frequency counter	C101: 3B (AVM/ONS) **TP13 : 17.734476MHz±100Hz**	Color bar	E-E	1) Adjust C101 to obtain 17.734476 MHz as the frequency at TP13.
		TP14: 5B (AVM/ONS) ↓ Frequency counter	C102: 4C (AVM/ONS) **TP14 : 7.0MHz±50kHz**	Color bar	E-E	2) Adjust C102 to obtain 7.0 MHz as the frequency at TP14.
41	**VITC SEP CLAMP Voltage**	TP10: 2F (AVM/ONS) 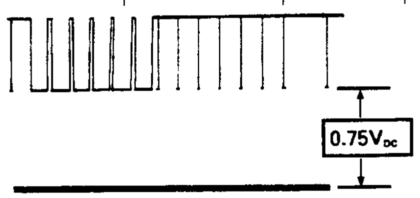	R1001: 3G (AVM/ONS)	Color bar	E-E	1) Adjust DC level of the sync tip to be 0.75V with R1001. ***Note Adjust level near V. sync. (See the figure below).*** 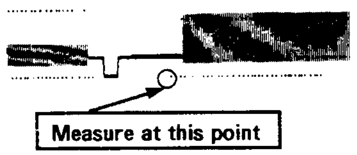

■ LOCATION OF TEST POINTS AND ADJUSTMENT PARTS

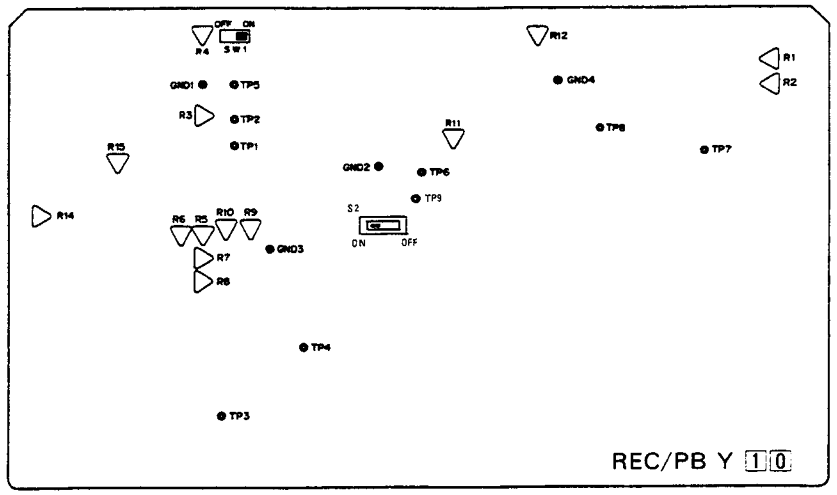
REC/PB Y 10
R4
OFF
ON
SW1
R12
R1
R2
GND1
TP5
GND4
R3
TP2
TP1
R11
TP8
TP7
R15
GND2
TP6
TP9
S2
ON
OFF
R14
R6
R5
R10
R9
GND3
R7
R8
TP4
TP3

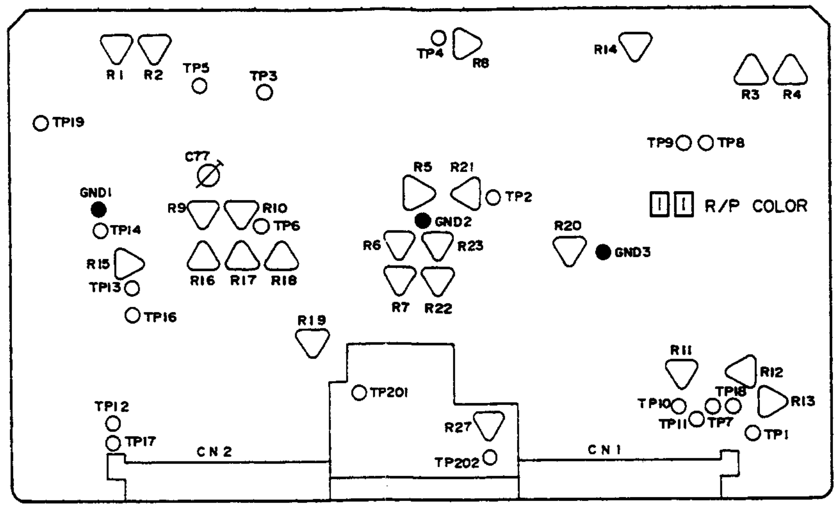
11 R/P COLOR
R1
R2
TP5
TP3
TP4
R8
R14
R3
R4
TP19
TP9
TP8
C77
GND1
R5
R21
TP2
R9
R10
TP6
GND2
R20
GND3
TP14
R6
R23
R15
R16
R17
R18
TP13
R7
R22
TP16
R19
R11
R12
TP201
TP18
R13
TP10
TP11
TP7
TP1
TP12
R27
TP17
CN2
CN1
TP202

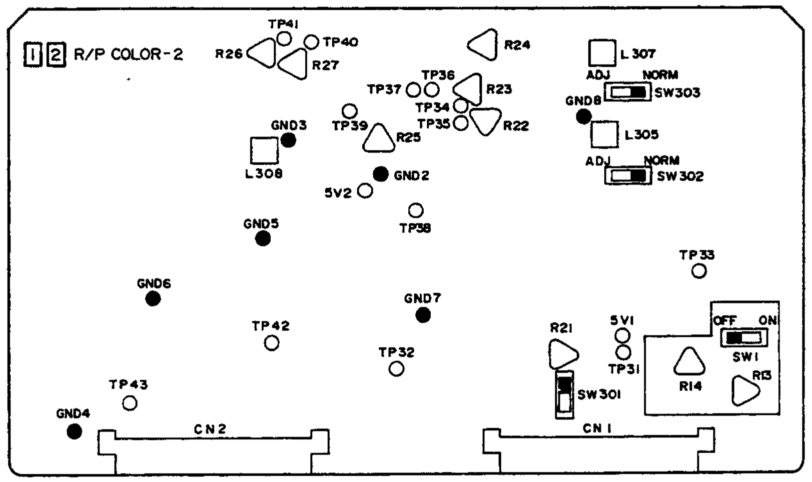
12 R/P COLOR-2
TP41
TP40
R26
R27
R24
L307
ADJ
NORM
SW303
TP37
TP36
R23
GND8
TP34
TP35
R22
GND3
TP39
R25
L305
L308
GND2
ADJ
NORM
SW302
5V2
GND5
TP38
TP33
GND6
GND7
OFF
ON
TP42
R21
5V1
TP31
SW1
TP32
R14
R13
TP43
SW301
GND4
CN2
CN1

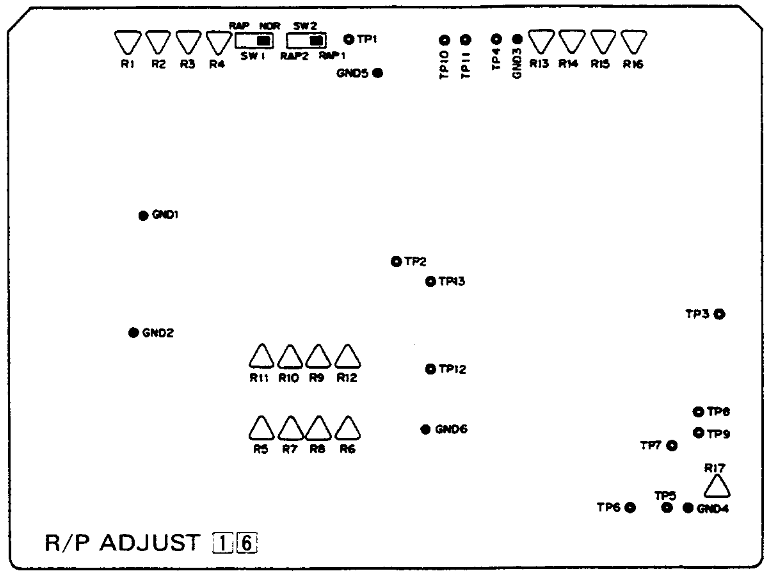
R/P ADJUST 16
RAP
NOR
SW2
TP1
R1
R2
R3
R4
SW1
RAP2
RAP1
GND5
TP10
TP11
TP4
GND3
R13
R14
R15
R16
GND1
TP2
TP13
TP3
GND2
R11
R10
R9
R12
TP12
GND6
R5
R7
R8
R6
TP8
TP9
TP7
R17
TP5
TP6
GND4

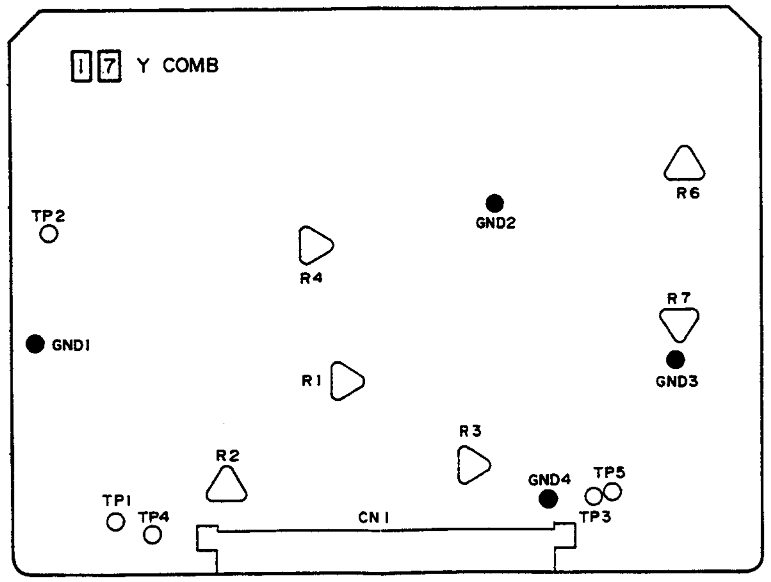
17 Y COMB
R6
GND2
TP2
R4
R7
GND1
GND3
R1
R3
R2
GND4
TP5
TP1
TP4
CN1
TP3

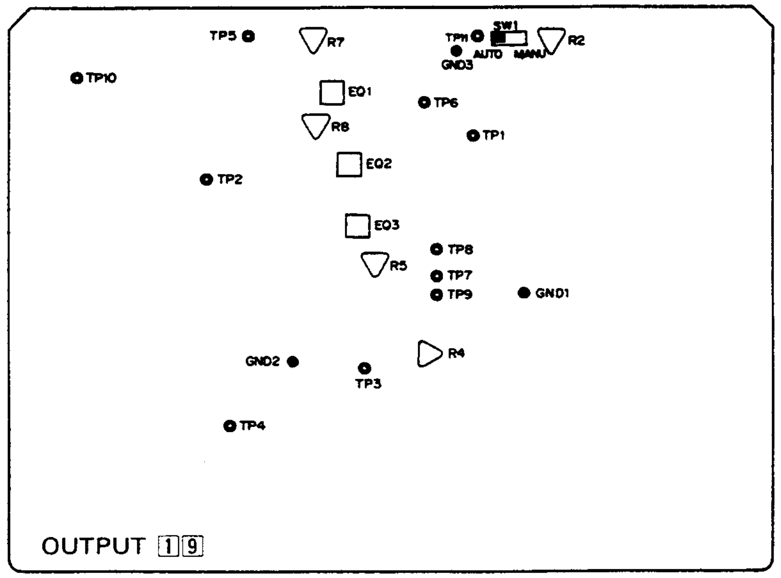
OUTPUT 19
TP5
R7
TP11
SW1
R2
AUTO
MANU
GND3
TP10
EQ1
TP6
R8
TP1
EQ2
TP2
EQ3
TP8
R5
TP7
TP9
GND1
R4
GND2
TP3
TP4

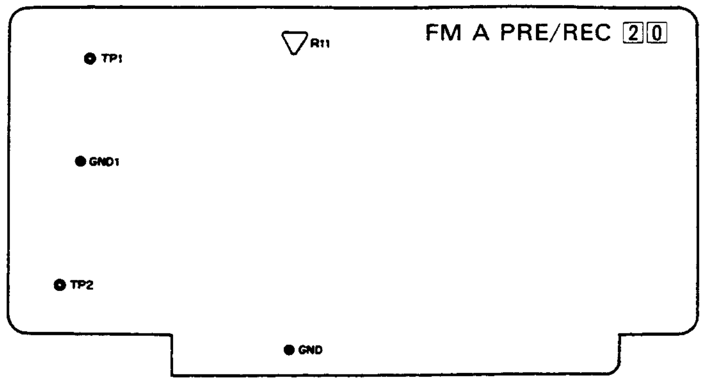
FM A PRE/REC 20
TP1
R11
GND1
TP2
GND

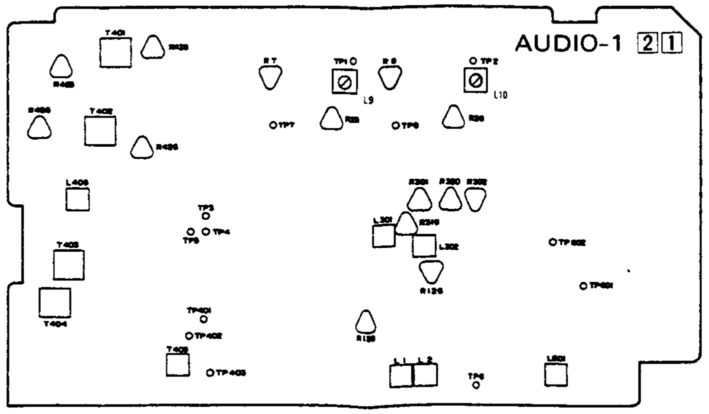
AUDIO-1 21
T401
R425
T402
R426
R7
TP1
L9
R8
TP2
L10
TP7
TP8
L403
TP3
TP4
TP5
R128
L301
L302
T403
T404
TP401
TP402
T405
TP403
L1
L2
TP6

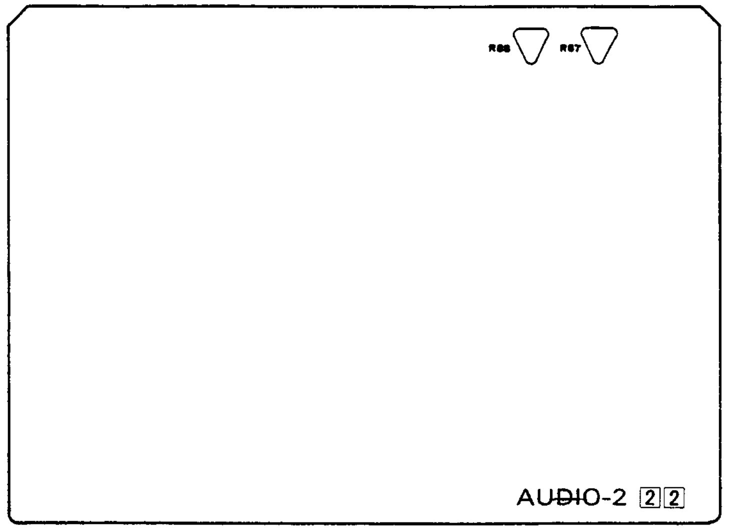
AUDIO-2 22

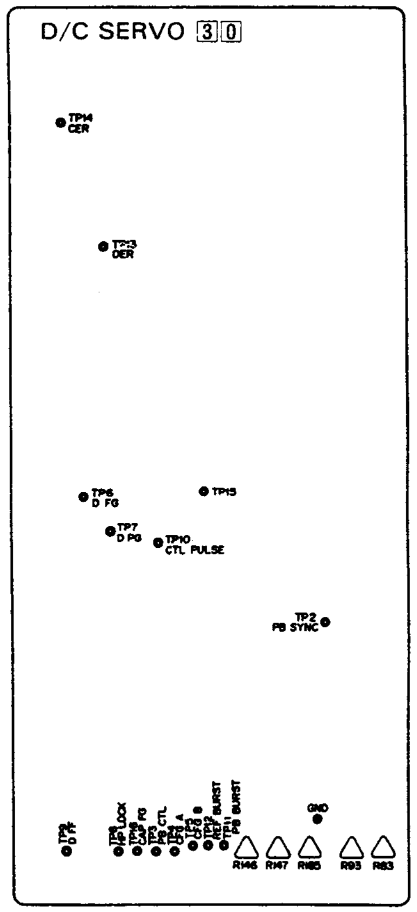
D/C SERVO 30
TP14 CER
TP13 DER
TP6 D FG
TP15
TP7 D PG
TP10 CTL PULSE
TP2 PB SYNC
TP9 D FF
TP8 HP LOCK
TP16 CAP FG
TP5 PB CTL
TP4 CFG A
TP3 CFG B
TP12 REF BURST
TP11 PB BURST
GND
R146
R147
R165
R93
R83

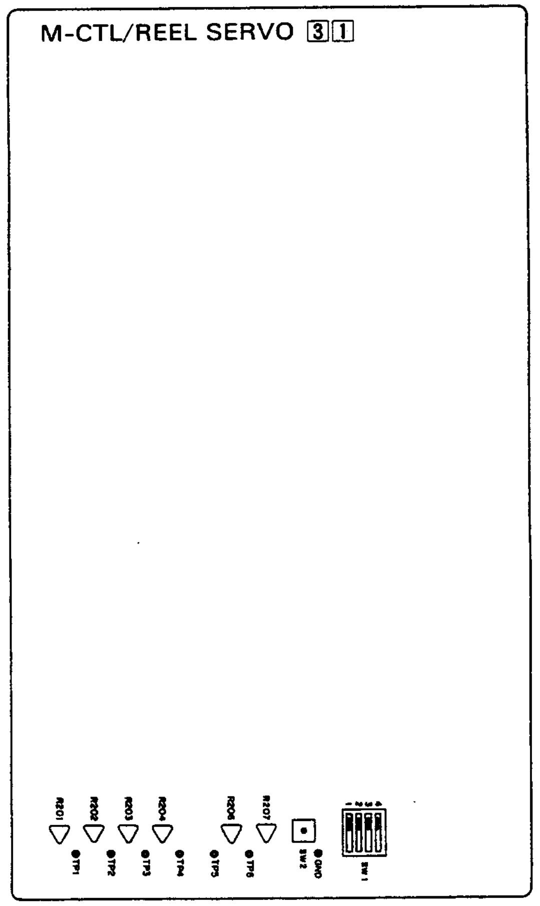
M-CTL/REEL SERVO 31
R201
R202
R203
R204
R206
R207
TP1
TP2
TP3
TP4
TP5
TP6
SW 2
GND
1 2 3 4
SW 1

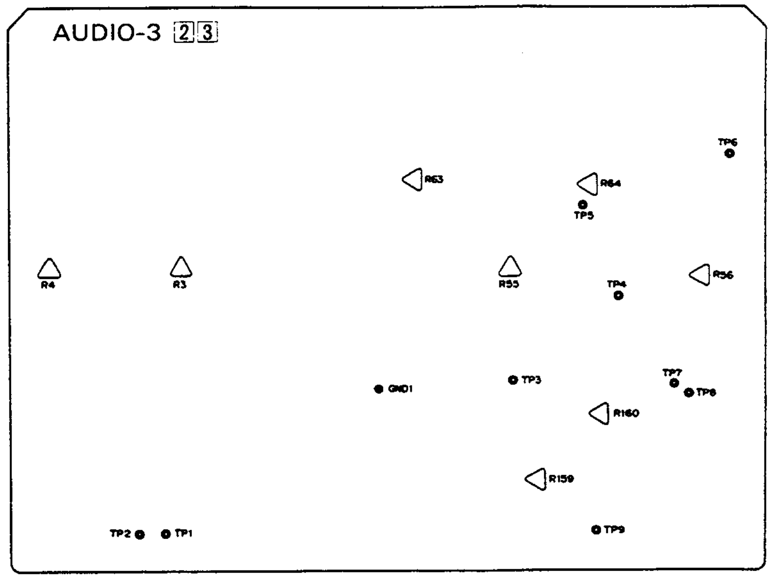
AUDIO-3 23
TP6
R63
R64
TP5
R4
R3
R55
TP4
R56
GND1
TP3
TP7
TP8
R160
R159
TP9
TP2
TP1

3. 5 SUB PANEL CIRCUIT

Note • **Subject of the following adjustments is the BR-S822E/BR-S622E equipped with the SA-T22E(TBC-1,2,3 boards).**
• **Before proceeding to the following adjustment, make sure that the TBC-1,2,3 boards are correctly adjusted.**
• **Unless otherwise indicated, all check points and adjustment parts are located on the SUB PANEL board.**
• **For check and adjustment of this circuit, supply color bar signal to the EXT. REF IN terminal of the VIDEO LINE IN connector.**

No.	Item	Check point	Adjustment	Signal	Mode	Check and Adjustment
1	**Video phase**	VIDEO OUT (75Ω terminator) 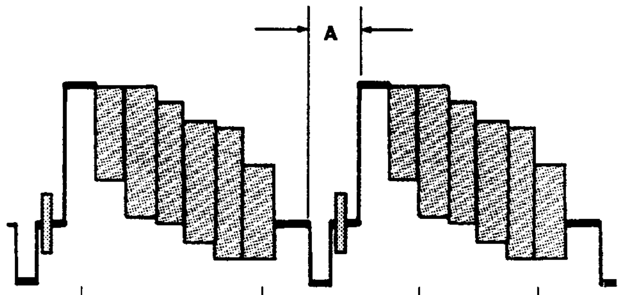 	VIDEO PHASE VR	Color bar	E-E	1) Set the switch SW3 on the TBC-1 board to "NORM". 2) Adjust the oscilloscope's GAIN control so that the portion "A" (see the figure) of the out put waveform from the VIDEO OUT becomes for 4.0 scale divisions on the scope. 3) Set the switch SW3 to "ADJ". 4) Adjust the VIDEO PHASE VR so that the portion "A" (see the figure) of the output waveform from the VIDEO OUT becomes for 4.0 scale divisions on the oscilloscope. 5) Return SW3 to "NORM" position.
2	**Genlock H phase**	VIDEO OUT EXT.REF. OUT (75Ω terminator) 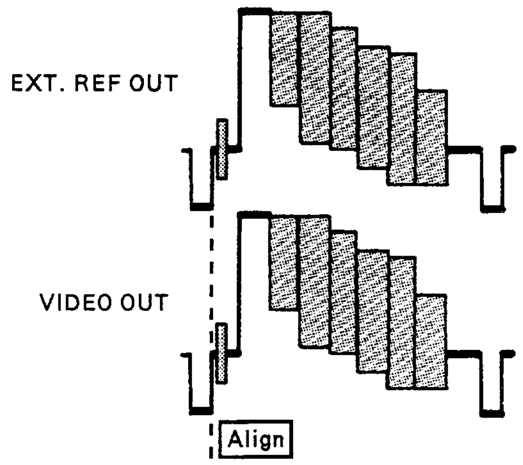 	SYSTEM PHASE VR	Color bar	E-E	1) Set the switch SW3 to "ADJ". 2) Obeserve output waveforms at the VIDEO OUT and EXT. REF OUT terminals. 3) Adjust the SYSTEM PHASE VR so that the two waveforms mentioned above become the same in the phase (to be the same waveform). 4) Return SW3 to "NORM" position.
3	**Genlock SC phase**	VIDEO OUT (75Ω terminator) ↓ Vectorscope **Adjust the SC PHASE VR so that the two waveforms mentioned above become the same in the phase.** 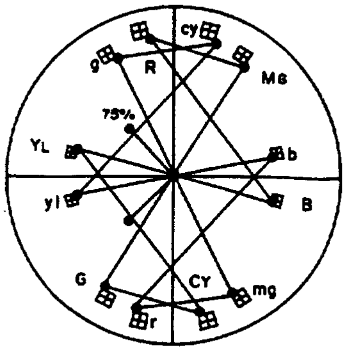 cy g R Mg 75% YL b yl B G CY mg r	SC PHASE VR	Color bar	E-E	1) Set the switch SW3 on the TBC-1 board to "ADJ" position. 2) Connect a vectorscope's A INPUT terminal to the VIDEO OUT terminal and B INPUT terminal to the EXT. REF OUT terminal. 3) Trigger the vectorscope externally (B-INPUT). 4) Set the vectorscope's PHASE and GAIN controls to position the burst signal of the B INPUT terminal correctly. 5) Adjust the SC PHASE VR to position the burst signal of A INPUT correctly. 6) Return SW3 to "NORM" position.

SECTION 4
DIAGRAMS AND CIRCUIT BOARDS

■ FOREWORD

1. Expression of connector

Connector is expressed in two ways.

1) The following illustrates 'CN2 pin 1' for example.

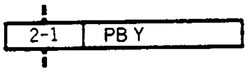

2) The following illustrates 'CN1 pins 1 and 2'.

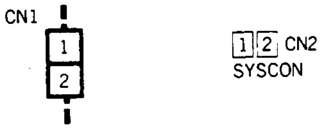

2. Expression of wiring

As the following circuit diagram is divided to print on some sheets, such an indication as the following is found in the case the wiring extends over two or more divided sections.

1) Circuit diagram divided into two or more sections:

Board No.	Board Name	Number of divided sections
02	MOTER-2	2 (1/2~2/2)
10	REC/PB Y	2 (1/2~2/2)
12	REC/PB COLOR	2 (1/2~2/2)
19	OUTPUT	2 (1/2~2/2)
21	AUDIO-1	3 (1/3~3/3)
23	AUDIO-3	2 (1/2~2/2)
31	M CTL/REEL SERVO	2 (1/2~2/2)
—	OVERALL	2 (1/2~2/2)

2) Indication of wiring which extends to another section:

(Example)
On the "1/2" diagram of REC/PB Y board, such an indication as the following is found on the "PB (H)" signal line.

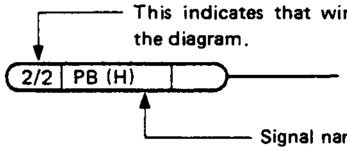

This indicates that wiring extends to "2/2" of the diagram.

Signal name

In the above case, the end of the wiring is connected to the "2/2-PB (H)" on the 2nd section of the diagram.

3. Wiring of connector

(Example)

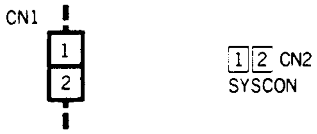

In the above example, CN1 is connected with CN2 on 12 SYSCON board.

4. Signal flow on the diagram

The following arrow marks indicate the specified signal paths respectively.

➡ : RECORDING or EE signal path
⇨ : PLAYBACK signal path
➪ : REC/PLAY signal path

5. Measurement of voltage and waveform

1) Voltage
Measured by digital voltmeter in REC mode.
Value in ( ) shows voltage in S-VHS PB mode, and it is indicated only in the case PB voltage is different from that in REC.

2) Waveform
Video: Unless otherwise indicated, (a) color bars signal input through LINE IN terminal in REC in S-VHS mode, (b) color bars signal of MHVE-2H alignment tape in PB.

6. Unit of value

Unless otherwise specified:

1) Resistance is in Ω (1/6 W)
2) Capacitance in μF
3) Inductance in μH
4) Screened parts (in ▨) are important for safety assurance. When replacing them, use specified parts.
5) Circuit board diagrams are printed as viewed from the back side of respective boards unless otherwise remarked.

4.1 KEY TO ABBREVIATIONS

A
ACC : Automatic Color Control
ADD : Adder
ADC : Analog to Digital Converter
ADJ : Adjustment
A DUB : Audio Dubbing
AE : Audio Erase
AEF : Automatic Edition Function
AFC : Automatic Frequency Control
AFT : Automatic Fine Tuning
AGC : Automatic Gain Control
AH : Audio Head
AL : After Loading
ALC : Automatic Level Control
ALM : Alarm
AM : Amplitude Modulation
AMP : Amplifier
ANT : Antenna
APC : Automatic Phase Control
APL : Average Picture Level
ASSEM : Assembly
ASS'Y : Assembly
ATT : Attenuator
AUTO : Automatic
AUX : Auxiliary
AUD : Audio

B
B : Brake
BAL : Balance
BATT : Battery
BCD : Binary Coded Decimal
BEG : Beginning
BFP : Burst Flag Pulse
BIT : Binary Digit
BLK : Black
BLU : Blue
BNC : Bayonet connector
BPF : Bandpass Filter
BRN : Brown
BRT : Brightness
B. SOL : Brake Solenoid
B/W : Black and White

C
C : Ceramic
CAP : Capstan
CASS : Cassette
CF : Ceramic Filter, color Frame
CC : Cassette compartment
CE : Chip Enable
CH : Channel
CHROMA : Chrominance
CLK : Clock
CLR : Clear
CMD : Command
CNT : Count, Counter
CONV : Converter
COL : Color
COM : Common
COMP : Comparator
Composite
Compensation
CONN : Connector
CT : Ceramic Trap
CTC : Crosstalk Cancel
CTL : Control

D
D : Drum
DAC : Dightal to Analog Converter
DD : Direct Drive
DEC : Decoder
DEMOD : Demodulator
DET : Detector
DEV : Deviation
DFRS : Drum Free RUN STOP
DIF TRANS : Differential Transformer
DISCR : Discriminator
DL : Delay Line
DOC : Dropout Compensator
DRUM FF : Drum Flip Flop
DUB : Dubbing

E
E : Edit, Erase
EDP : Electronic Data Processing
E-E : Electric to Electric
EF : Emitter-Follower
EMPHA : Emphasis
EMG : Emergency
ENC : Encoder
EN : Enable
EQ : Equalizer
ESNS : End Sensor
EXP : Expander
EXT : External

F
FE : Full Erase
FF : Fast Forward
Flipflop
FG : Frequency Generator
FM : Frequency Modulation
FMA : FM Audio
FREQ : Frequency
F-V CONV : Frequency to Voltage Converter
FWD : Forward

G
GDL : Grass Delay Line
GEN LOCK : Generator Lock
GND : Ground
GRN : Green
GRY : Gray

H
H : High, Horizontal
HG : Hall Generator
HPF : Highpass Filter

I	IF	: Intermediate Frequency
	IFT	: Intermediate Frequency Transformer
	IND	: Indicator
	INH	: Inhibit
	INS	: Insert
	INT	: Internal, Interrupt
	INV	: Inverter
	I/O	: Input/Output
L	L	: Low
	LB	: Low Band
	LCD	: Liquid Crystal Display
	LE	: Loading End
	LED	: Light Emitting Diode
	LIN	: Linearity
	LIM	: Limiter
	LOAD	: Loading
	LP	: Long Play
	LPF	: Lowpass Filter
	LT	: Loading Tension
M	MAX	: Maximum
	MDA	: Motor Drive Amplifier
	MIC	: Microphone
	MIN	: Minimum
	MIX	: Mixer
	MM	: Monostable Multivibrator
	MOD	: Modulator
	MON	: Monitor
	MOS	: Metal Oxide Semkonductor
	MPX	: Multiplexer
	MS	: Mode Select
	MUT	: Muting
N	NC	: Noise Cancel
	NFB	: Negative Feedback
	NO	: Normally Open
O	OPAMP	: Operational Amplifier
	OP	: Operation
	ORN	: Orange
	OSC	: Oscillator
P	PB	: Playback
	PC	: Photocoupler
	PCM	: Pulse Code Modulation
	PGM	: Program
	PG	: Pulse Generator
	PI	: Photo Interrupter
	PLL	: Phase Locked Loop
	POS	: Position
	PR	: Pinch Roller
	PREV	: Preview
	PRL	: Preroll
	PU	: Pickup
	PWB	: Printed Wiring Board
Q	Q	: Quality Factor
R	RA	: Resistor Array
		: Random Access
	RAM	: Random Access Memory
	REC	: Recording
	REG	: Regulated
	REV	: Reverse
	REW	: Rewind
	RF	: Radio Frequency
	RST	: Reset
	R/P	: Record/Playback
	RPT	: Repeat
	RT	: Rotary Transformer
	RY	: Relay
S	S	: Search, Servo
	SC	: Subcarrier
	SEAR	: Search
	SEL	: Select
	SENS	: Sensor
	SEP	: Separator
	SF	: Source Follower
	SFF	: Short Fast Forward
	SFWD	: Search Forward
	SI	: Serial In
	SIG	: Signal
	SO	: Serial Out
	SOL	: Solenoid
	SOS	: Sound on Sound
	SP	: Standard Play
	SR	: Supply Reel
	SREV	: Search Reverse
	SREW	: Short Rewind
	SSG	: Sync Signal Generator
	STL	: Still
	SUP	: Supply
	SYNC	: Synchronization
	SYSCON	: System control
T	TBC	: Time Base Corrector
	TC	: Tension Control, Time Code
	TDG	: Time Date Generator
	T. EALM	: Tape End Alarm
	TEN	: Tension
	TIM	: Timing
	TK	: Tracking
	TL	: Time Lapse
	TREC	: Timer Record
	TSW	: Time Switch
	TU	: Take-up
	TUR	: Take-up Reel
U	UNLD	: Unloading
	UNREG	: Unregulated
	UNSW	: Unswitched
V	V	: Video, Vertical
	VCO	: Voltage Controlled Oscillator
	VD	: Vertical Drive
	VXO	: Variable Crystal Oscillator
	VLT	: Violet
	VSCH	: Variable Search
W	WHT	: White
	WV	: Working Voltage
	WARN	: Warning
X	XTL	: Crystal
Y	Y	: Luminance
	YLW	: Yellow

4.2 REPLACING SUBMINIATURE "CHIP" PARTS

1. General description

Some of resistors, variable resistors, shorting jumpers (0 Ω resistors), ceramic capacitors, transistors, diodes are chip parts. Those removed once cannot be used again.

2. Replacement of chip parts

Replacement of chip parts should be performed as follows. Use a soldering iron (17 W for 260–30°C approx.) that has sharp-pointed tip and high performance in insulation.
It is more convenient to use a soldering iron with solder absorber (55 W approx.).

(1) Soldered condition of chip parts

- Resistors, capacitors, etc.

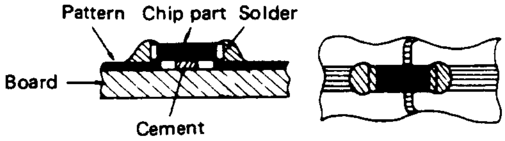

- Transistors, diodes, etc.

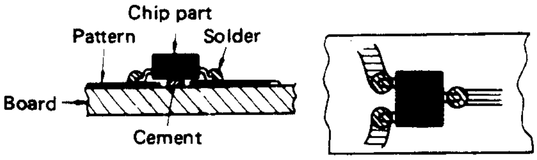

(2) Removing of chip parts

- Resistors, capacitors, etc.
  - i) Melt solder at a side.

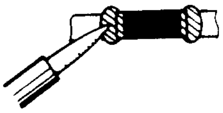

  - ii) Holding the chip with tweezers, melt solder at the other side.

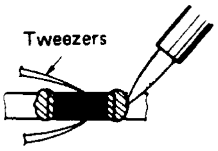

  - iii) Take off the chip in twisting and sliding motion.

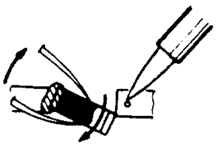

- Transistors, diodes, etc.
  - i) Melt solder at the side of single lead.

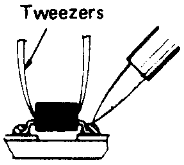

  - ii) Lift the unsolderd side upwards.

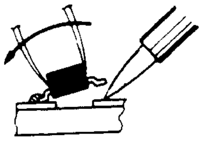

  - iii) Simultaneously melt solder at two leads of the other side and pull up the chip.

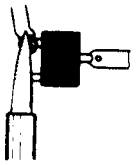

(3) Preheating and soldering of chip parts
Except transistors, make sure to preheat all chip parts, capacitors in particular, with a hot wind of 150°C approx. (of a hair dryer, etc.) for 2 minutes just before soldering, and immediately solder by a soldering iron of approx. 30 W.

(4) Attaching of chip parts

- i) Heap up a proper amount of solder beforehand.

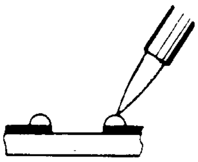

- ii) Holding down a new chip by tweezers, solder it to the board by a soldering iron to melt solder from its lower part to the upper part (in the direction shown by a big arrow).

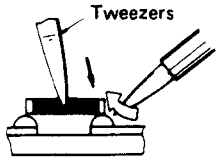

Note:
- Don't heat chip parts over 3 seconds.
- Don't rub electrodes.
- Don't use chip parts which were once removed.
- No cement is required.

3. Shapes of transistors & diodes

- **Transistors**

DTA124EK	2
DTA144EK	2
DTC114EK	1
DTC114YK	1
DTC144EK	1
DTC144EU	1
FMG2	3
FMS1	4
FMW1	5
IMX1	6
IMZ1	7
IMZ2	8
2SA1022C	9
2SB709	9
2SC2412K	9
2SC2778	9
2SC4081	9
2SD601/A	9
2SD602/A	9
2SK621	10

- **Diodes**

DAN202K	11
DAP202K	12
MA28WA	13
MA3056	13
MA3075	13

1

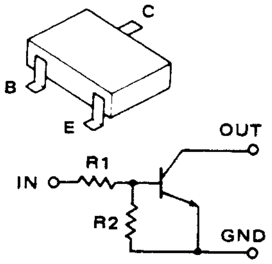
C
B
E
OUT
R1
IN
R2
GND

6

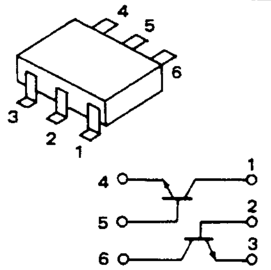
4
5
6
3
2
1
4
1
5
2
6
3

11

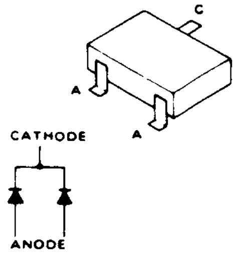
C
A
A
CATHODE
ANODE

2

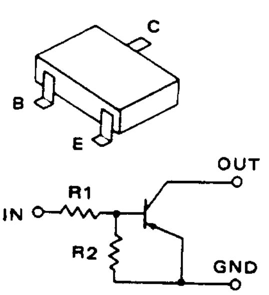
C
B
E
OUT
R1
IN
R2
GND

7

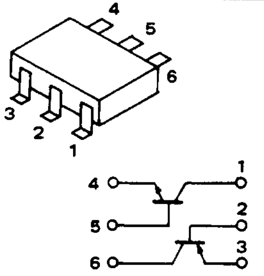
4
5
6
3
2
1
4
1
5
2
6
3

12

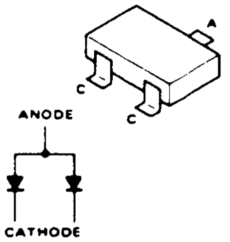
A
C
C
ANODE
CATHODE

3

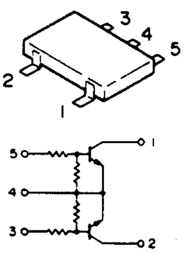
3
4
5
2
1
5
1
4
3
2

8

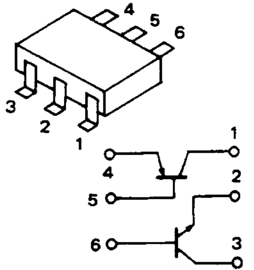
4
5
6
3
2
1
1
4
2
5
6
3

13

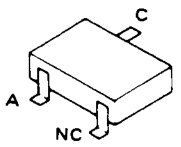

4

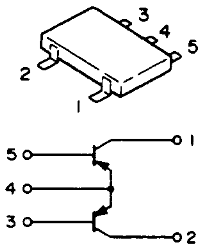
3
4
5
2
1
5
1
4
3
2

9

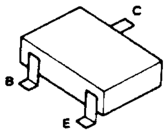

5

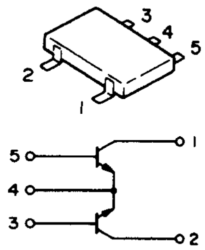
3
4
5
2
1
5
1
4
3
2

10

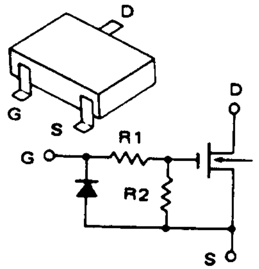
D
G
S
D
R1
G
R2
S

4.3 CIRCUIT BOARD LOCATIONS

· Index to board by kind of diagram

Board No.	Board Name	Page of diagram			
		Block diagram	Schematic diagram	Circuit board	Parts list
01	MOTHER-1	—	4-20	4-21	6-1
02	MOTHER-2	—	4-22, 23	4-24	6-1, 6-2
03	SLOT MOTHER	—	4-25	4-25	6-2
04	SYSCON MOTHER	—	4-26	4-26	6-2
05	FUSE	—	4-26	4-26	6-2
10	REC/PB Y	4-7	4-28, 29	4-30	6-2 ~ 6-8
11	REC/PB C	4-8	4-32, 33	4-31	6-8 ~ 6-13
12	REC/PB C-2	4-9	4-34	4-37	6-13 ~ 6-16
15	PRE/REC	—	4-47	4-47	6-16
16	R/P ADJUST	4-10	4-38	4-39	6-16 ~ 6-20
17	Y COMB (1H DELAY, 4Fsc INC.)	4-12	4-40	4-43	6-20 ~ 6-25
19	OUTPUT	4-11	4-44, 45	4-46	6-25 ~ 6-29
20	FMA PRE/REC	4-14	4-47	4-47	6-29
21	AUDIO-1	4-15	4-48, 49, 50	4-53	6-29 ~ 6-35
22	AUDIO-2	4-15	4-54	4-55	6-35, 6-36
23	AUDIO-3	4-14	4-56, 57	4-58	6-37 ~ 6-40
24	AUDIO-4 } XLR	4-15	4-59	4-60	6-40, 6-41
25	AUDIO-5 }	4-15	4-59	4-60	6-41, 6-42
26	AUDIO-6 (27 JACK, 28 VR INC.)	4-15	4-61	4-62	6-42 ~ 6-44
29	A/C HEAD	—	—	4-62	6-44
30	D/C SERVO	4-13	4-63	4-64	6-44 ~ 6-47
31	M-CTL/REEL SERVO	4-17	4-66, 67	4-65	6-47 ~ 6-50
40	SYSCON	4-17	4-68	4-69	6-50 ~ 6-52
41	AV MICOM/ON SCREEN	4-16	4-70	4-71	6-52 ~ 6-54
42	OPERATION (43, 44, 46, 47, 48 INC.)	—	4-72	4-73	6-54 ~ 6-57
45	COUNTER DISPLAY	—	4-72	4-71	6-57
71	REAR-1 (72 -2, 73 -3 INC.)	4-15	4-74	4-75	6-58
80	METER (81 SWITCH, 82 TRACKING VR INC.)	4-15	4-77	4-77	6-59
83	SUB PANEL (84 TP TERMINAL INC.)	—	4-76	4-76	6-59
91	DECK TERMINAL (92 -2 INC.)	—	4-27	4-27	6-60
93	CASSETTE HOUSING	—	—	4-27	6-60

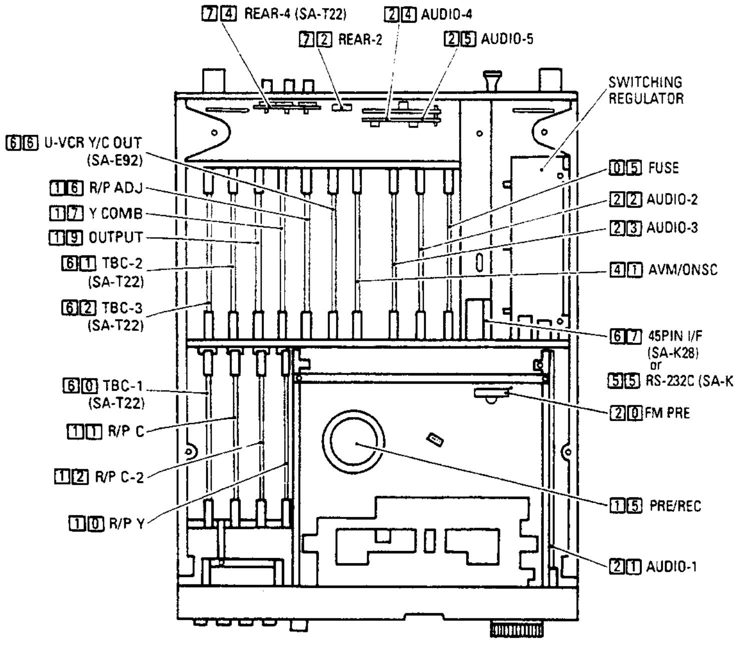
74 REAR-4 (SA-T22)
24 AUDIO-4
72 REAR-2
25 AUDIO-5
SWITCHING REGULATOR
66 U-VCR Y/C OUT (SA-E92)
16 R/P ADJ
17 Y COMB
19 OUTPUT
61 TBC-2 (SA-T22)
62 TBC-3 (SA-T22)
05 FUSE
22 AUDIO-2
23 AUDIO-3
41 AVM/ONSC
67 45PIN I/F (SA-K28) or
55 RS-232C (SA-K27)
20 FM PRE
60 TBC-1 (SA-T22)
11 R/P C
12 R/P C-2
10 R/P Y
15 PRE/REC
21 AUDIO-1

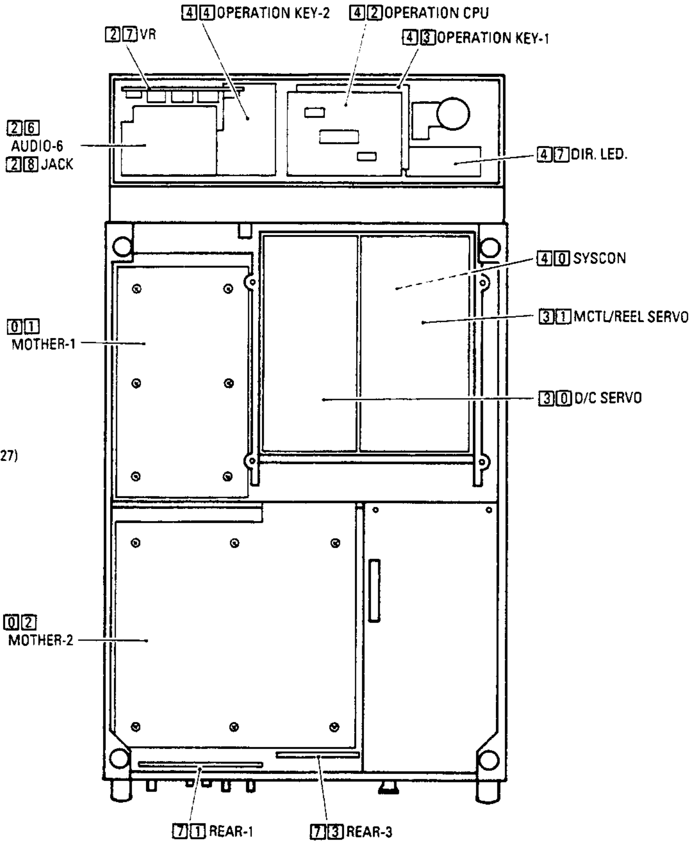
44 OPERATION KEY-2
42 OPERATION CPU
27 VR
43 OPERATION KEY-1
26 AUDIO-6
28 JACK
47 DIR. LED.
40 SYSCON
31 MCTL/REEL SERVO
01 MOTHER-1
30 D/C SERVO
02 MOTHER-2
71 REAR-1
73 REAR-3

4.4 REC/PB Y BLOCK DIAGRAM

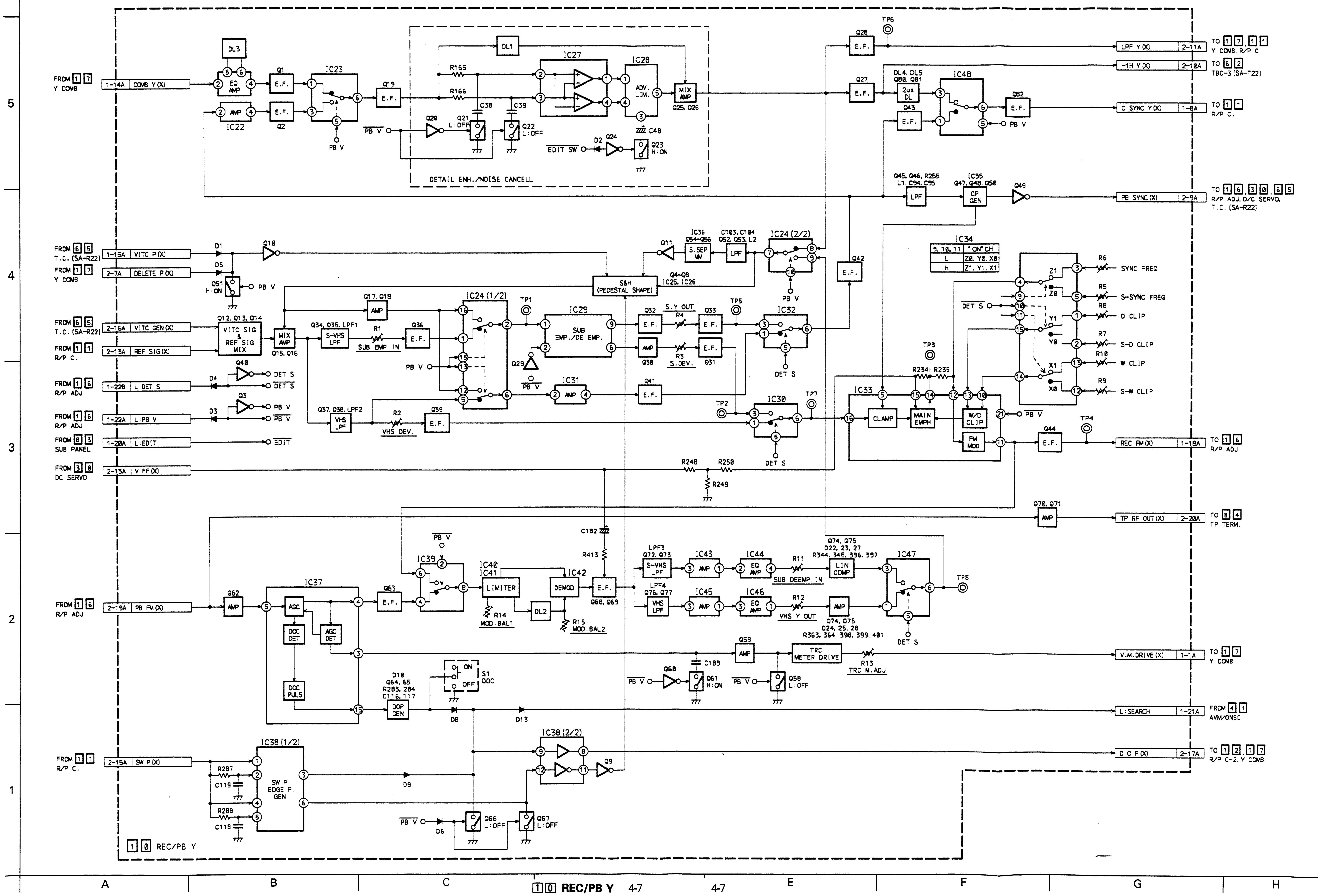
FROM 1 7 Y COMB
1-14A COMB Y (X)
FROM 6 5 T.C. (SA-R22)
1-15A VITC P (X)
FROM 1 7 Y COMB
2-7A DELETE P (X)
FROM 6 5 T.C. (SA-R22)
2-16A VITC GEN (X)
FROM 1 1 R/P C.
2-13A REF SIG (X)
FROM 1 6 R/P ADJ
1-22B L:DET S
FROM 1 6 R/P ADJ
1-22A L:PB V
FROM 8 3 SUB PANEL
1-20A L:EDIT
FROM 3 0 DC SERVO
2-13A V FF (X)
FROM 1 6 R/P ADJ
2-19A PB FM (X)
FROM 1 1 R/P C.
2-15A SW P (X)
DL3
EQ AMP
IC22
AMP
Q1
E.F.
Q2
E.F.
IC23
PB V
Q19
E.F.
DL1
R165
R166
C38
C39
Q20
Q21 L:OFF
Q22 L:OFF
IC27
IC28
ADV. LIM.
MIX AMP
Q25, Q26
C40
D2
Q24
Q23 H:ON
EDIT SW
DETAIL ENH./NOISE CANCELL
TP6
Q28
E.F.
Q27
E.F.
DL4, DL5 Q80, Q81
2us DL
Q43
E.F.
IC48
Q82
E.F.
PB V
LPF Y (X) 2-11A
TO 1 7, 1 1 Y COMB, R/P C
-1H Y (X) 2-10A
TO 6 2 TBC-3 (SA-T22)
C SYNC Y (X) 1-8A
TO 1 1 R/P C.
Q45, Q46, R255 L1, C94, C95
LPF
IC35 Q47, Q48, Q50
CP GEN
Q49
PB SYNC (X) 2-9A
TO 1 6, 3 0, 6 5 R/P ADJ, D/C SERVO, T.C. (SA-R22)
D1
D5
Q10
Q51 H:ON
PB V
S&H (PEDESTAL SHAPE)
Q4-Q8 IC25, IC26
Q11
IC36 Q54-Q56
S.SEP NM
C103, C104 Q52, Q53, L2
LPF
IC24 (2/2)
PB V
Q42
E.F.
IC34
9, 10, 11 "ON" CH
L Z0, Y0, X0
H Z1, Y1, X1
Z1
Z0
Y1
Y0
X1
X0
DET S
R6 SYNC FREQ
R5 S-SYNC FREQ
R8 D CLIP
R7 S-D CLIP
R10 W CLIP
R9 S-W CLIP
Q12, Q13, Q14
VITC SIG & REF SIG MIX
MIX AMP
Q15, Q16
Q17, Q18
AMP
Q34, Q35, LPF1
S-VHS LPF
R1 SUB EMP IN
Q36
E.F.
IC24 (1/2)
PB V
TP1
IC29
SUB EMP./DE EMP.
Q29
PB V
IC31
AMP
Q32
E.F.
S.Y OUT
R4
Q33
E.F.
TP5
IC32
DET S
AMP
Q30
R3 S.DEV.
Q31
E.F.
Q41
E.F.
Q40
DET S
DET S
D4
Q3
PB V
PB V
D3
EDIT
Q37, Q38, LPF2
VHS LPF
R2 VHS DEV.
Q39
E.F.
TP2
IC30
TP7
DET S
TP3
R234 R235
IC33
CLAMP
MAIN EMPH
W/D CLIP
FM MOD
PB V
Q44
E.F.
TP4
REC FM (X) 1-18A
TO 1 6 R/P ADJ
R248
R250
R249
Q70, Q71
AMP
TP RF OUT (X) 2-20A
TO 8 4 TP. TERM.
C182
R413
PB V
IC39
IC40
IC41
LIMITER
R14 MOD.BAL1
DL2
IC42
DEMOD
R15 MOD.BAL2
E.F.
Q68, Q69
LPF3 Q72, Q73
S-VHS LPF
IC43
AMP
IC44
EQ AMP
R11 SUB DEEMP. IN
Q74, Q75 D22, 23, 27 R344, 345, 396, 397
LIN COMP
IC47
TP8
LPF4 Q76, Q77
VHS LPF
IC45
AMP
IC46
EQ AMP
R12 VHS Y OUT
AMP
Q74, Q75 D24, 25, 28 R363, 364, 398, 399, 401
DET S
Q62
AMP
IC37
AGC
DOC DET
AGC DET
DOC PULS
Q63
E.F.
Q59
AMP
TRC METER DRIVE
R13 TRC M.ADJ
V.M.DRIVE (X) 1-1A
TO 1 7 Y COMB
Q60
C109
Q61 H:ON
PB V
PB V
Q58 L:OFF
D10 Q64, 65 R283, 284 C116, 117
DOP GEN
ON
OFF
S1 DOC
D8
D13
L:SEARCH 1-21A
FROM 4 1 AVM/ONSC
IC38 (1/2)
R287
C119
R288
C118
SW P. EDGE P. GEN
D9
IC38 (2/2)
Q9
D O P (X) 2-17A
TO 1 2, 1 7 R/P C-2, Y COMB
PB V
D6
Q66 L:OFF
Q67 L:OFF
1 0 REC/PB Y
6
5
4
3
2
1
A
B
C
D
E
F
G
H

4.5 REC/PB COLOR-1 BLOCK DIAGRAM

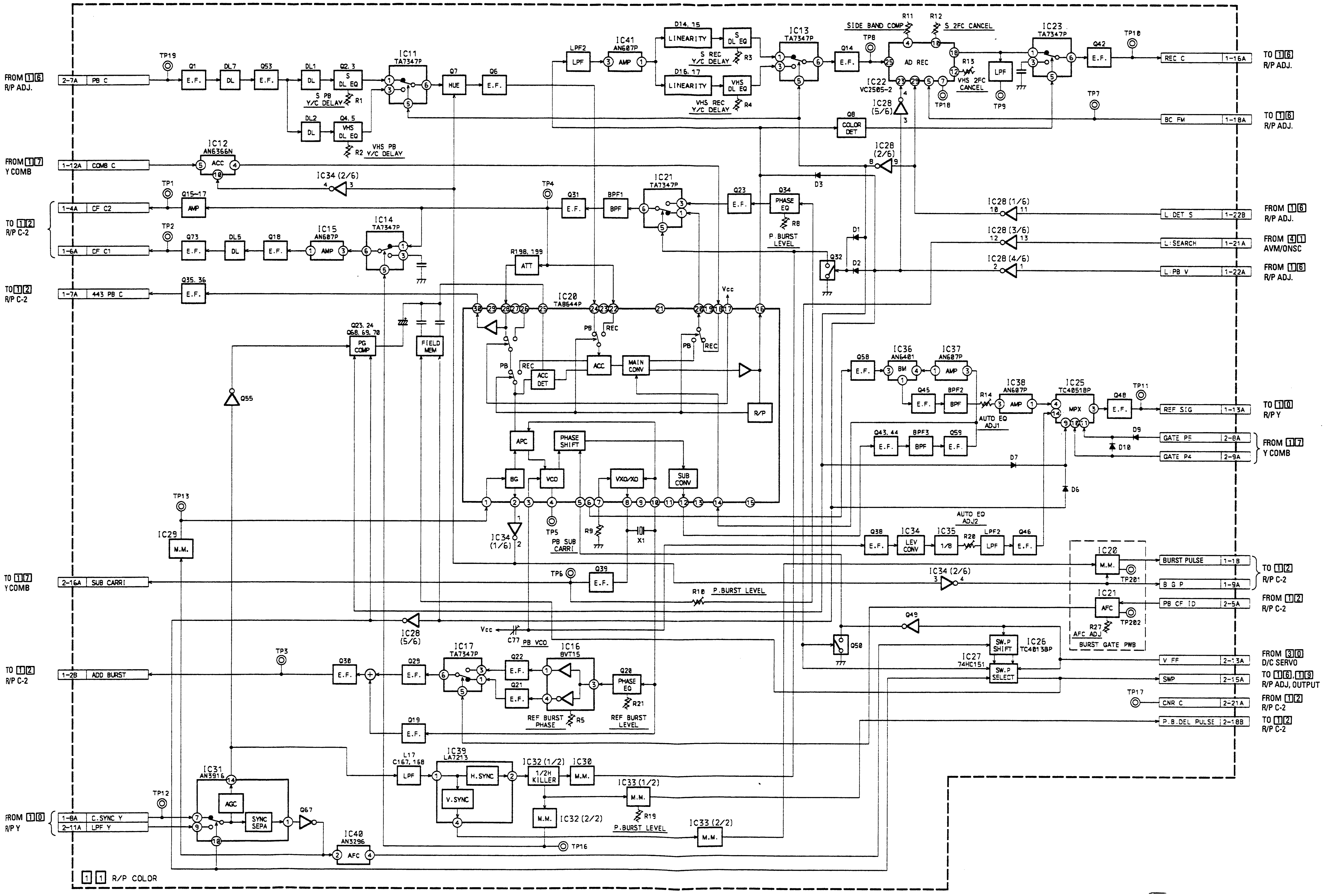
FROM 16 R/P ADJ.
2-7A PB C
TP19
Q1 E.F.
DL7 DL
Q53 E.F.
DL1 DL
Q2,3 S DL EQ
S PB Y/C DELAY R1
DL2 DL
Q4,5 VHS DL EQ
VHS PB Y/C DELAY R2
IC11 TA7347P
Q7 HUE
Q6 E.F.
LPF2 LPF
IC41 AN607P AMP
D14,15 LINEARITY
S DL EQ
S REC Y/C DELAY R3
D16,17 LINEARITY
VHS DL EQ
VHS REC Y/C DELAY R4
IC13 TA7347P
Q14 E.F.
TP8
SIDE BAND COMP R11
R12 S 2FC CANCEL
IC22 VC2505-2 AD REC
R13 VHS 2FC CANCEL
TP18 TP9
LPF
IC23 TA7347P
Q42 E.F.
TP10
REC C 1-16A
TO 16 R/P ADJ.
TP7
BC FM 1-18A
TO 16 R/P ADJ.
IC28 (5/6)
Q8 COLOR DET
FROM 17 Y COMB
1-12A COMB C
IC12 AN6366N ACC
IC34 (2/6)
IC28 (2/6)
D3
TP1
TO 12 R/P C-2
1-4A CF C2
Q15-17 AMP
TP4
Q31 E.F.
BPF1 BPF
IC21 TA7347P
Q23 E.F.
Q34 PHASE EQ R8 P.BURST LEVEL
1-6A CF C1
TP2
Q73 E.F.
DL5 DL
Q18 E.F.
IC15 AN607P AMP
IC14 TA7347P
D1 D2 Q32
IC28 (1/6)
IC28 (3/6)
IC28 (4/6)
L DET S 1-22B
FROM 16 R/P ADJ.
L:SEARCH 1-21A
FROM 41 AVM/ONSC
L:PB V 1-22A
FROM 16 R/P ADJ.
TO 12 R/P C-2
1-7A 443 PB C
Q35,36 E.F.
R198,199 ATT
IC20 TA8644P
Vcc
Q23,24 Q68,69,70 PG COMP
FIELD MEM
PB REC
ACC DET
ACC
MAIN CONV
R/P
Q55
APC
PHASE SHIFT
BG
VCO
VXO/XO
SUB CONV
IC36 AN6401 BM
IC37 AN607P AMP
Q58 E.F.
Q45 E.F.
BPF2 BPF
R14
IC38 AN607P AMP
AUTO EQ ADJ1
IC25 TC4051BP MPX
Q48 E.F.
TP11
REF SIG 1-13A
TO 10 R/P Y
Q43,44 E.F.
BPF3 BPF
Q59 E.F.
D9 D10
GATE PE 2-8A
GATE P4 2-9A
FROM 17 Y COMB
D7 D6
TP13
IC29 M.M.
IC34 (1/6)
TP5 PB SUB CARRI
R9
X1
Q38 E.F.
IC34 LEV CONV
IC35 1/8
R20
AUTO EQ ADJ2
LPF2 LPF
Q46 E.F.
IC20 M.M.
TP201
BURST PULSE 1-18
B G P 1-9A
TO 12 R/P C-2
TO 17 Y COMB
2-16A SUB CARRI
TP6
Q39 E.F.
R10 P.BURST LEVEL
IC34 (2/6)
IC21 AFC
TP202
R27 AFC ADJ
BURST GATE PWB
PB CF ID 2-5A
FROM 12 R/P C-2
IC28 (5/6)
Vcc
C77 PB VCO
Q49
Q50
IC26 TC4013BP SW.P SHIFT
IC27 74HC151 SW.P SELECT
V FF 2-13A
FROM 30 D/C SERVO
SWP 2-15A
TO 16, 19 R/P ADJ, OUTPUT
TP17
CNR C 2-21A
FROM 12 R/P C-2
P.B.DEL PULSE 2-18B
TO 12 R/P C-2
TO 12 R/P C-2
1-28 ADD BURST
TP3
Q30 E.F.
Q29 E.F.
IC17 TA7347P
Q22 E.F.
Q21 E.F.
IC16 BVT15
Q20 PHASE EQ
R21 REF BURST LEVEL
REF BURST PHASE R5
Q19 E.F.
L17 C167,168 LPF
IC39 LA7213
H.SYNC
V.SYNC
IC32 (1/2) 1/2H KILLER
IC30 M.M.
IC33 (1/2) M.M.
R19 P.BURST LEVEL
IC32 (2/2) M.M.
IC33 (2/2) M.M.
TP16
FROM 10 R/P Y
1-8A C.SYNC Y
2-11A LPF Y
TP12
IC31 AN3916 AGC SYNC SEPA
Q67
IC40 AN3296 AFC
11 R/P COLOR
A B C D E F G H
1 2 3 4 5 6

4.6 REC/PB COLOR-2 BLOCK DIAGRAM

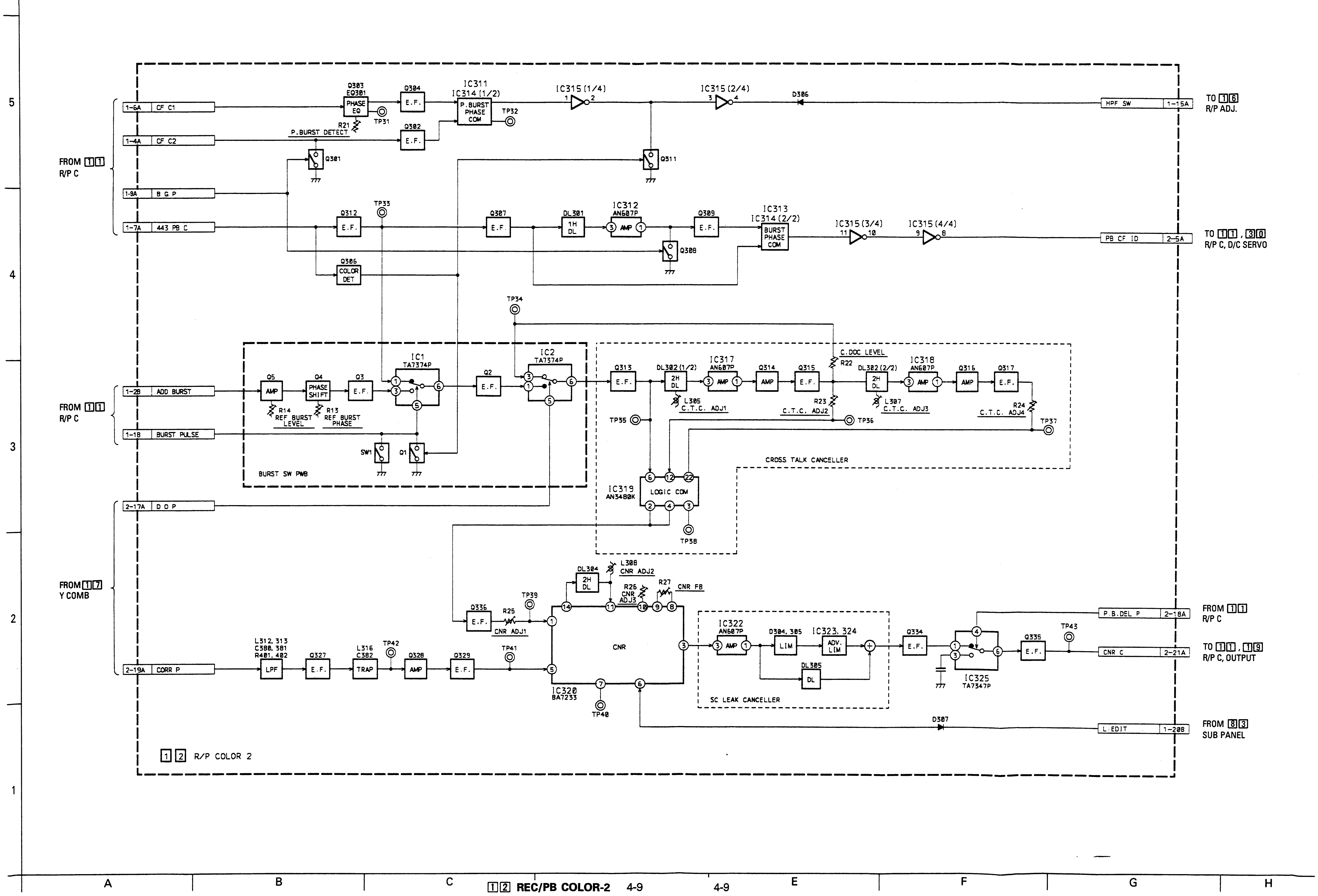
6
5
4
3
2
1
A
B
C
D
E
F
G
H
FROM ①① R/P C
1-6A CF C1
1-4A CF C2
1-9A B G P
1-7A 443 PB C
Q303 EQ301 PHASE EQ
TP31
R21
P.BURST DETECT
Q304 E.F.
Q302 E.F.
IC311 IC314 (1/2) P.BURST PHASE COM
TP32
IC315 (1/4)
IC315 (2/4)
D306
HPF SW 1-15A
TO ①⑥ R/P ADJ.
Q301
Q311
Q312 E.F.
TP33
Q307 E.F.
DL301 1H DL
IC312 AN607P AMP
Q309 E.F.
Q308
IC313 IC314 (2/2) BURST PHASE COM
IC315 (3/4)
IC315 (4/4)
PB CF ID 2-5A
TO ①①, ③⓪ R/P C, D/C SERVO
Q306 COLOR DET
TP34
FROM ①① R/P C
1-2B ADD BURST
1-1B BURST PULSE
Q5 AMP
Q4 PHASE SHIFT
Q3 E.F.
R14 REF BURST LEVEL
R13 REF BURST PHASE
IC1 TA7374P
Q2 E.F.
IC2 TA7374P
SW1
Q1
BURST SW PWB
Q313 E.F.
DL302 (1/2) 2H DL
L305 C.T.C. ADJ1
IC317 AN607P AMP
Q314 AMP
Q315 E.F.
C.DOC LEVEL
R22
R23 C.T.C. ADJ2
DL302 (2/2) 2H DL
L307 C.T.C. ADJ3
IC318 AN607P AMP
Q316 AMP
Q317 E.F.
R24 C.T.C. ADJ4
TP35
TP36
TP37
CROSS TALK CANCELLER
IC319 AN3480K LOGIC COM
TP38
2-17A D O P
FROM ①⑦ Y COMB
DL304 2H DL
L308 CNR ADJ2
R26 CNR ADJ3
R27 CNR FB
Q336 E.F.
R25 CNR ADJ1
TP39
CNR
IC320 BA7233
TP40
2-19A CORR P
L312, 313 C380, 381 R401, 402 LPF
Q327 E.F.
L316 C382 TRAP
TP42
Q328 AMP
Q329 E.F.
TP41
IC322 AN607P AMP
D304, 305 LIM
IC323, 324 ADV. LIM
DL305 DL
SC LEAK CANCELLER
Q334 E.F.
IC325 TA7347P
Q335 E.F.
TP43
P.B.DEL P 2-18A
FROM ①① R/P C
CNR C 2-21A
TO ①①, ①⑨ R/P C, OUTPUT
D307
L.EDIT 1-20B
FROM ⑧③ SUB PANEL
①② R/P COLOR 2

4.7 R/P ADJUST BLOCK DIAGRAM

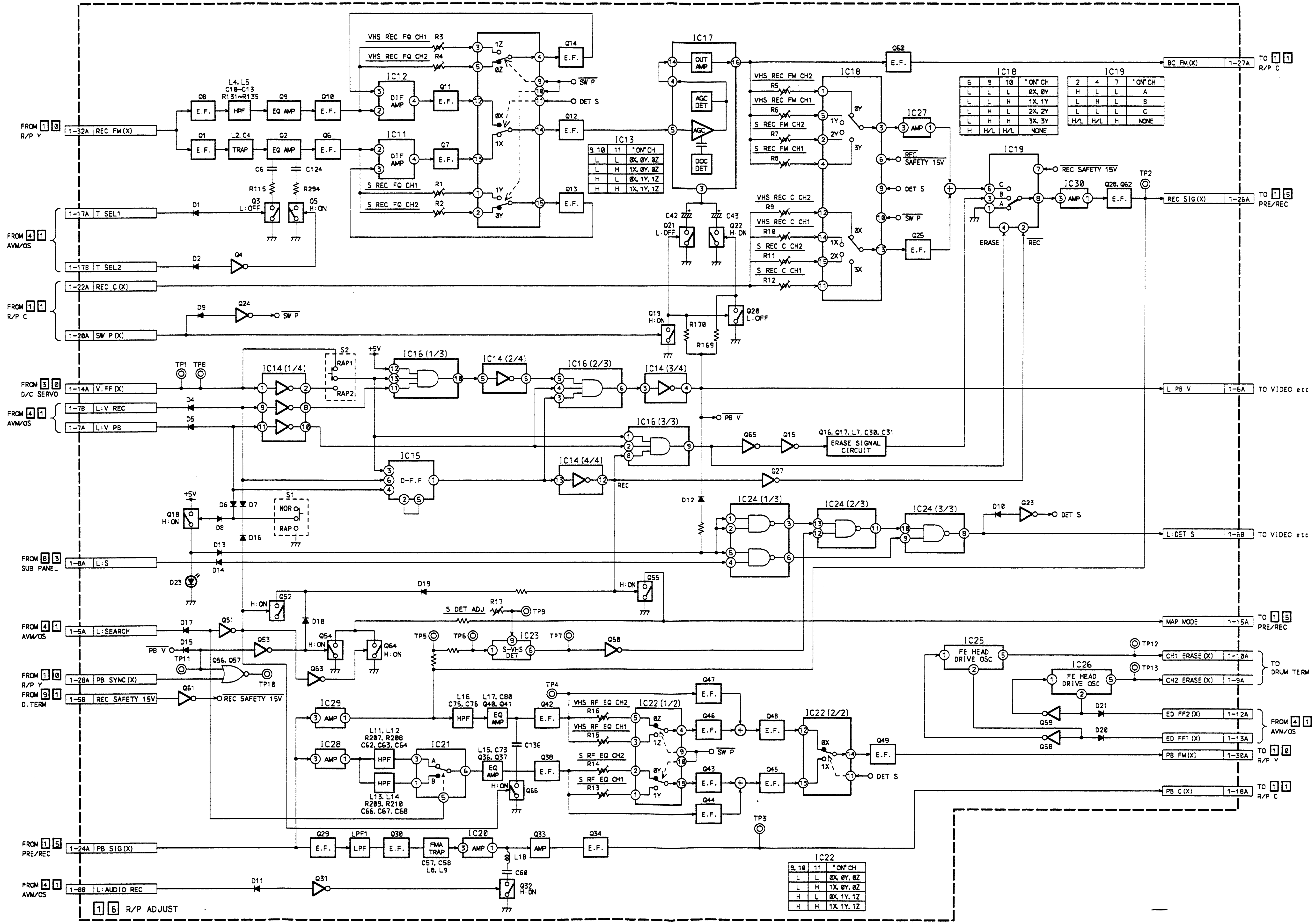
FROM 1 0 R/P Y
1-32A REC FM (X)
FROM 4 1 AVM/OS
1-17A T SEL1
1-17B T SEL2
FROM 1 1 R/P C
1-22A REC C (X)
1-20A SW P (X)
FROM 3 0 D/C SERVO
1-14A V.FF (X)
FROM 4 1 AVM/OS
1-7B L:V REC
1-7A L:V PB
FROM 8 3 SUB PANEL
1-8A L:S
FROM 4 1 AVM/OS
1-5A L:SEARCH
FROM 1 0 R/P Y
1-28A PB SYNC (X)
FROM 9 1 D.TERM
1-5B REC SAFETY 15V
FROM 1 5 PRE/REC
1-24A PB SIG (X)
FROM 4 1 AVM/OS
1-8B L:AUDIO REC
1 6 R/P ADJUST
VHS REC FQ CH1 R3
VHS REC FQ CH2 R4
S REC FQ CH1 R1
S REC FQ CH2 R2
IC12 DIF AMP
IC11 DIF AMP
IC13
IC17 OUT AMP AGC DET AGC DOC DET
IC18
VHS REC FM CH2 R5
VHS REC FM CH1 R6
S REC FM CH2 R7
S REC FM CH1 R8
VHS REC C CH2 R9
VHS REC C CH1 R10
S REC C CH2 R11
S REC C CH1 R12
IC27 AMP
IC19
IC30 AMP
Q28, Q62 E.F.
Q60 E.F.
ERASE
REC
REC SAFETY 15V
DET S
SW P
TP2
BC FM (X) 1-27A TO 1 1 R/P C
REC SIG (X) 1-26A TO 1 5 PRE/REC
L.PB V 1-6A TO VIDEO etc.
L.DET S 1-6B TO VIDEO etc
MAP MODE 1-15A TO 1 5 PRE/REC
CH1 ERASE (X) 1-10A
CH2 ERASE (X) 1-9A TO DRUM TERM
ED FF2 (X) 1-12A
ED FF1 (X) 1-13A FROM 4 1 AVM/OS
PB FM (X) 1-30A TO 1 0 R/P Y
PB C (X) 1-18A TO 1 1 R/P C
IC14 (1/4)
IC14 (2/4)
IC14 (3/4)
IC14 (4/4)
IC16 (1/3)
IC16 (2/3)
IC16 (3/3)
S2 RAP1 RAP2
IC15 D-F.F
S1 NOR RAP
Q16, Q17, L7, C30, C31 ERASE SIGNAL CIRCUIT
IC24 (1/3)
IC24 (2/3)
IC24 (3/3)
Q23 DET S
S DET ADJ R17 TP9
IC23 S-VHS DET
IC25 FE HEAD DRIVE OSC
IC26 FE HEAD DRIVE OSC
IC29 AMP
IC28 AMP
IC21
L11, L12 R207, R208 C62, C63, C64
L13, L14 R209, R210 C66, C67, C68
L16 C75, C76 HPF
L17, C80 Q40, Q41 EQ AMP
L15, C73 Q36, Q37 EQ AMP
IC22 (1/2)
IC22 (2/2)
VHS RF EQ CH2 R16
VHS RF EQ CH1 R15
S RF EQ CH2 R14
S RF EQ CH1 R13
Q29 E.F.
LPF1 LPF
Q30 E.F.
FMA TRAP C57, C58 L8, L9
IC20 AMP
Q33 AMP
Q34 E.F.
Q32 H:ON
TP1 TP3 TP4 TP5 TP6 TP7 TP8 TP10 TP11 TP12 TP13
A B C D E F G H
1 2 3 4 5 6

IC13

9, 10	11	"ON" CH
L	L	0X, 0Y, 0Z
L	H	1X, 0Y, 0Z
H	L	0X, 1Y, 1Z
H	H	1X, 1Y, 1Z

IC18

6	9	10	"ON" CH
L	L	L	0X, 0Y
L	L	H	1X, 1Y
L	H	L	2X, 2Y
L	H	H	3X, 3Y
H	H/L	H/L	NONE

IC19

2	4	7	"ON" CH
H	L	L	A
L	H	L	B
L	L	L	C
H/L	H/L	H	NONE

IC22

9, 10	11	"ON" CH
L	L	0X, 0Y, 0Z
L	H	1X, 0Y, 0Z
H	L	0X, 1Y, 1Z
H	H	1X, 1Y, 1Z

4.8 OUTPUT BLOCK DIAGRAM

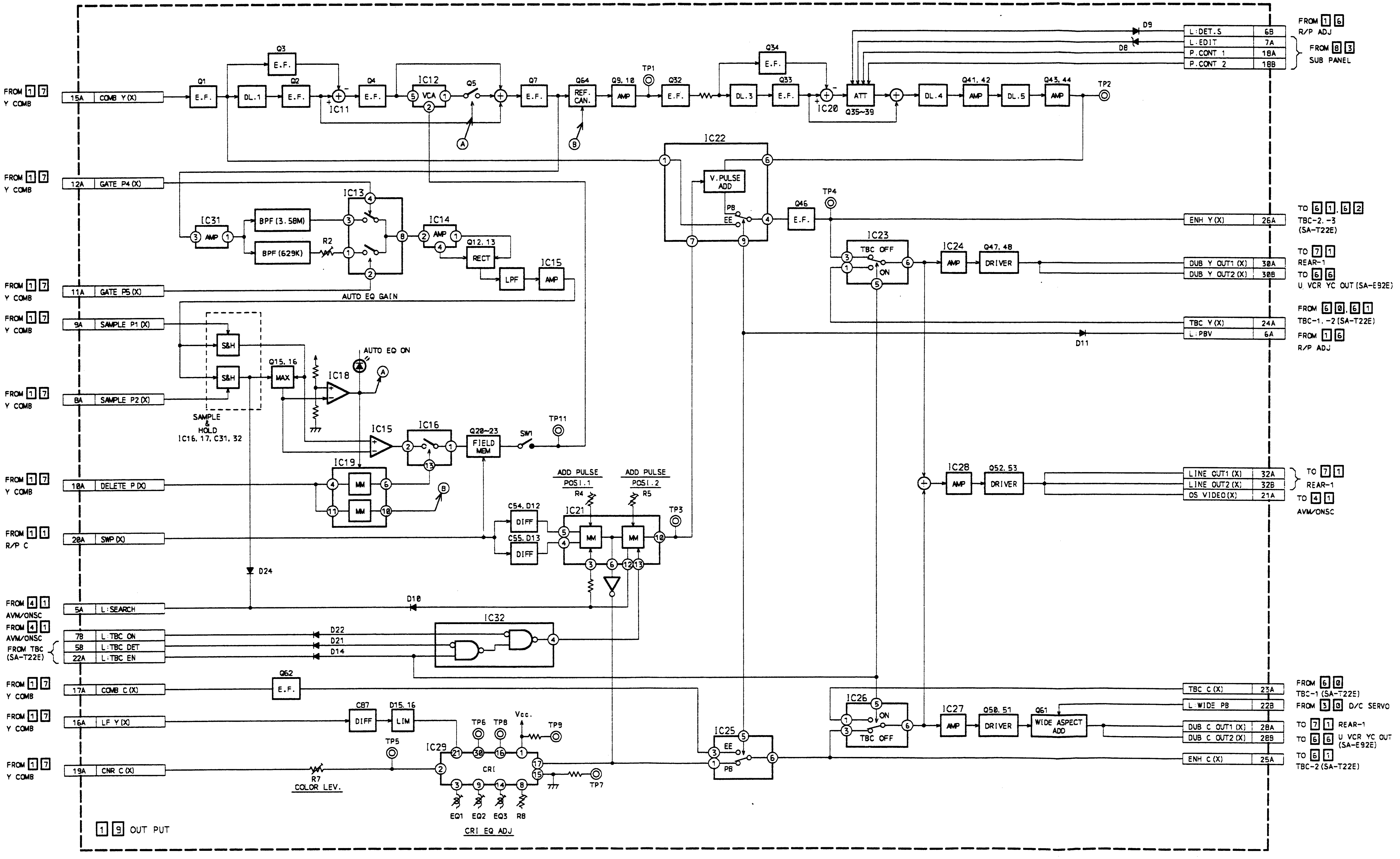
FROM 17 Y COMB
15A COMB Y (X)
Q1 E.F.
DL.1
Q2 E.F.
Q3 E.F.
IC11
Q4 E.F.
IC12 VCA
Q5
Q7 E.F.
Q64 REF. CAN.
Q9, 10 AMP
TP1
Q32 E.F.
DL.3
Q34 E.F.
Q33 E.F.
IC20
ATT Q35~39
DL.4
Q41, 42 AMP
DL.5
Q43, 44 AMP
TP2
D9
D8
L:DET.S 6B
L:EDIT 7A
P.CONT 1 18A
P.CONT 2 18B
FROM 16 R/P ADJ
FROM 83 SUB PANEL
FROM 17 Y COMB
12A GATE P4 (X)
IC22
V.PULSE ADD
PB
EE
Q46 E.F.
TP4
ENH Y (X) 26A
TO 61, 62 TBC-2, -3 (SA-T22E)
IC13
IC31 AMP
BPF (3.58M)
BPF (629K)
R2
IC14 AMP
Q12, 13 RECT
LPF
IC15 AMP
AUTO EQ GAIN
FROM 17 Y COMB
11A GATE P5 (X)
IC23 TBC OFF ON
IC24 AMP
Q47, 48 DRIVER
DUB Y OUT1 (X) 30A
DUB Y OUT2 (X) 30B
TO 71 REAR-1
TO 66 U. VCR YC OUT (SA-E92E)
FROM 17 Y COMB
9A SAMPLE P1 (X)
S&H
S&H
AUTO EQ ON
Q15, 16 MAX
IC18
FROM 17 Y COMB
8A SAMPLE P2 (X)
SAMPLE & HOLD IC16, 17, C31, 32
TBC Y (X) 24A
L:PBV 6A
D11
FROM 60, 61 TBC-1, -2 (SA-T22E)
FROM 16 R/P ADJ
IC15
IC16
Q20~23 FIELD MEM
SW1
TP11
IC19 MM MM
FROM 17 Y COMB
10A DELETE P (X)
IC28 AMP
Q52, 53 DRIVER
LINE OUT1 (X) 32A
LINE OUT2 (X) 32B
OS VIDEO (X) 21A
TO 71 REAR-1
TO 41 AVM/ONSC
ADD PULSE POSI.1 R4
ADD PULSE POSI.2 R5
C54, D12 DIFF
C55, D13 DIFF
IC21 MM MM
TP3
FROM 11 R/P C
20A SWP (X)
D24
FROM 41 AVM/ONSC
5A L:SEARCH
D10
IC32
FROM 41 AVM/ONSC
FROM TBC (SA-T22E)
7B L:TBC ON
5B L:TBC DET
22A L:TBC EN
D22
D21
D14
FROM 17 Y COMB
17A COMB C (X)
Q62 E.F.
TBC C (X) 23A
L:WIDE PB 22B
FROM 60 TBC-1 (SA-T22E)
FROM 30 D/C SERVO
IC26 ON TBC OFF
IC27 AMP
Q50, 51 DRIVER
Q61 WIDE ASPECT ADD
DUB C OUT1 (X) 28A
DUB C OUT2 (X) 28B
TO 71 REAR-1
TO 66 U VCR YC OUT (SA-E92E)
FROM 17 Y COMB
16A LF Y (X)
C87 DIFF
D15, 16 LIM
TP6 TP8 Vcc. TP9
TP5
IC29 CRI
IC25 EE PB
ENH C (X) 25A
TO 61 TBC-2 (SA-T22E)
FROM 17 Y COMB
19A CNR C (X)
R7 COLOR LEV.
TP7
EQ1 EQ2 EQ3 R8
CRI EQ ADJ
19 OUT PUT
6
5
4
3
2
1
A
B
C
E
F
G
H

4.9 Y COMB BLOCK DIAGRAM

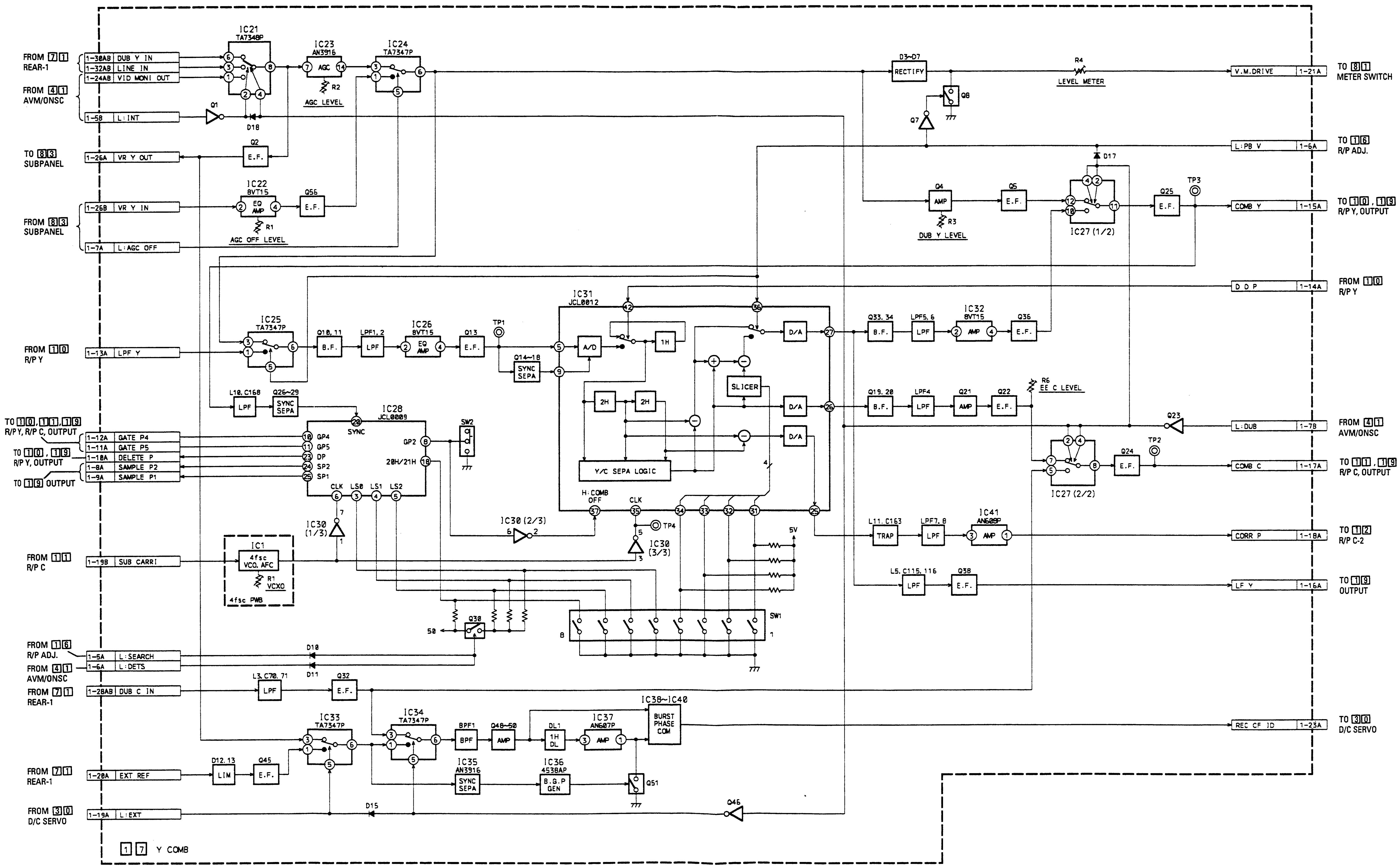
FROM 71 REAR-1
1-30AB DUB Y IN
1-32AB LINE IN
FROM 41 AVM/ONSC
1-24AB VID MONI OUT
1-5B L:INT
TO 83 SUBPANEL
1-26A VR Y OUT
FROM 83 SUBPANEL
1-26B VR Y IN
1-7A L:AGC OFF
FROM 10 R/P Y
1-13A LPF Y
TO 10, 11, 19 R/P Y, R/P C, OUTPUT
1-12A GATE P4
1-11A GATE P5
TO 10, 19 R/P Y, OUTPUT
1-10A DELETE P
1-8A SAMPLE P2
TO 19 OUTPUT
1-9A SAMPLE P1
FROM 11 R/P C
1-19B SUB CARRI
FROM 16 R/P ADJ.
1-5A L:SEARCH
FROM 41 AVM/ONSC
1-6A L:DETS
FROM 71 REAR-1
1-28AB DUB C IN
FROM 71 REAR-1
1-20A EXT REF
FROM 30 D/C SERVO
1-19A L:EXT
17 Y COMB
IC21 TA7348P
IC23 AN3916
AGC
R2 AGC LEVEL
IC24 TA7347P
Q1
D18
Q2
E.F.
IC22 8VT15
EQ AMP
R1 AGC OFF LEVEL
Q56
E.F.
IC25 TA7347P
Q10, 11
B.F.
LPF1, 2
LPF
IC26 8VT15
EQ AMP
Q13
E.F.
TP1
Q14–18
SYNC SEPA
L10, C168
LPF
Q26–29
SYNC SEPA
IC28 JCL0009
SYNC
GP4
GP5
DP
SP2
SP1
GP2
20H/21H
CLK
LS0
LS1
LS2
SW2
IC30 (1/3)
IC1 4fsc VCO, AFC
R1 VCXO
4fsc PWB
IC30 (2/3)
IC30 (3/3)
TP4
IC31 JCL0012
A/D
1H
2H
2H
SLICER
D/A
D/A
D/A
Y/C SEPA LOGIC
H:COMB OFF
CLK
5V
SW1
8
1
Q30
50
D10
D11
L3, C70, 71
LPF
Q32
E.F.
IC33 TA7347P
IC34 TA7347P
BPF1
BPF
Q48–50
AMP
DL1
1H DL
IC37 AN607P
AMP
IC38–IC40
BURST PHASE COM
IC35 AN3916
SYNC SEPA
IC36 4538AP
B.G.P GEN
Q51
D12, 13
LIM
Q45
E.F.
D15
Q46
D3–D7
RECTIFY
R4
LEVEL METER
Q7
Q8
D17
Q4
AMP
R3 DUB Y LEVEL
Q5
E.F.
IC27 (1/2)
Q25
E.F.
TP3
Q33, 34
B.F.
LPF5, 6
LPF
IC32 8VT15
AMP
Q36
E.F.
Q19, 20
B.F.
LPF4
LPF
Q21
AMP
Q22
E.F.
R6 EE C LEVEL
Q23
IC27 (2/2)
Q24
E.F.
TP2
L11, C163
TRAP
LPF7, 8
LPF
IC41 AN608P
AMP
L5, C115, 116
LPF
Q38
E.F.
V.M.DRIVE 1-21A
TO 81 METER SWITCH
L:PB V 1-6A
TO 16 R/P ADJ.
COMB Y 1-15A
TO 10, 19 R/P Y, OUTPUT
D D P 1-14A
FROM 10 R/P Y
L:DUB 1-7B
FROM 41 AVM/ONSC
COMB C 1-17A
TO 11, 19 R/P C, OUTPUT
CORR P 1-18A
TO 12 R/P C-2
LF Y 1-16A
TO 19 OUTPUT
REC CF ID 1-23A
TO 30 D/C SERVO

4.10 DRUM/CAPSTAN SERVO BLOCK DIAGRAM

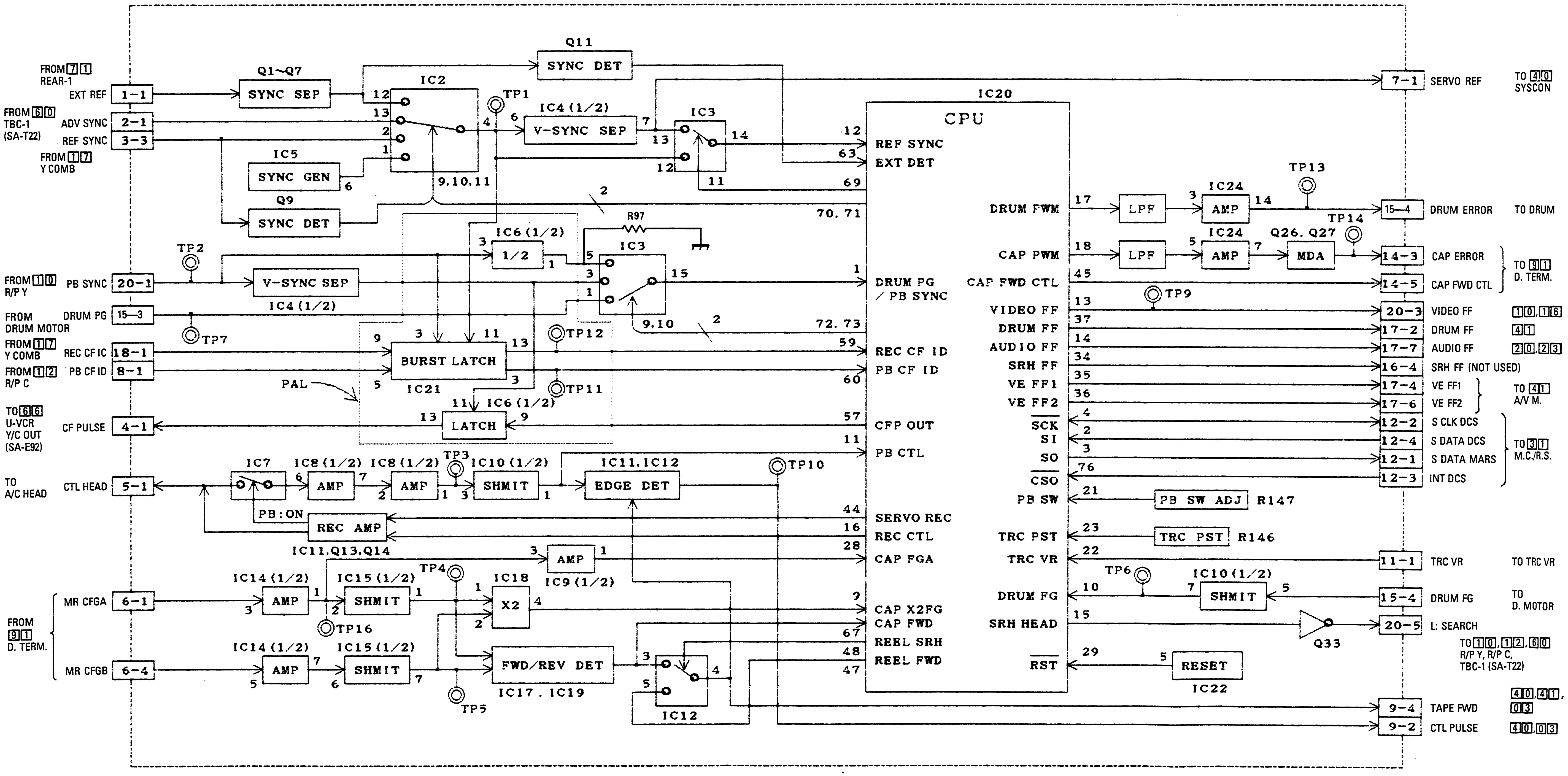
FROM 71 REAR-1
EXT REF
1-1
FROM 60 TBC-1 (SA-T22)
ADV SYNC
2-1
REF SYNC
3-3
FROM 17 Y COMB
Q1~Q7
SYNC SEP
Q11
SYNC DET
IC2
TP1
IC4 (1/2)
V-SYNC SEP
IC3
IC5
SYNC GEN
Q9
SYNC DET
9,10,11
IC20
CPU
REF SYNC
EXT DET
R97
IC6 (1/2)
1/2
TP2
FROM 10 R/P Y
PB SYNC
20-1
V-SYNC SEP
IC4 (1/2)
FROM DRUM MOTOR
DRUM PG
15-3
TP7
DRUM PG / PB SYNC
72, 73
70, 71
FROM 17 Y COMB
REC CF IC
18-1
FROM 12 R/P C
PB CF ID
8-1
BURST LATCH
IC21
TP12
TP11
PAL
REC CF ID
PB CF ID
IC6 (1/2)
LATCH
TO 66 U-VCR Y/C OUT (SA-E92)
CF PULSE
4-1
CFP OUT
PB CTL
TO A/C HEAD
CTL HEAD
5-1
IC7
PB:ON
IC8 (1/2)
AMP
IC8 (1/2)
AMP
TP3
IC10 (1/2)
SHMIT
IC11, IC12
EDGE DET
TP10
REC AMP
IC11, Q13, Q14
SERVO REC
REC CTL
AMP
IC9 (1/2)
CAP FGA
FROM 91 D. TERM.
MR CFGA
6-1
IC14 (1/2)
AMP
IC15 (1/2)
SHMIT
TP4
TP16
IC18
X2
CAP X2FG
CAP FWD
REEL SRH
REEL FWD
MR CFGB
6-4
IC14 (1/2)
AMP
IC15 (1/2)
SHMIT
TP5
FWD/REV DET
IC17, IC19
IC12
DRUM PWM
LPF
IC24
AMP
TP13
15-4
DRUM ERROR
TO DRUM
TP14
CAP PWM
LPF
IC24
AMP
Q26, Q27
MDA
14-3
CAP ERROR
TO 91 D. TERM.
CAP FWD CTL
14-5
CAP FWD CTL
TP9
VIDEO FF
20-3
VIDEO FF
10, 16
DRUM FF
17-2
DRUM FF
41
AUDIO FF
17-7
AUDIO FF
20, 23
SRH FF
16-4
SRH FF (NOT USED)
VE FF1
17-4
VE FF1
VE FF2
17-6
VE FF2
TO 41 A/V M.
SCK
12-2
S CLK DCS
SI
12-4
S DATA DCS
SO
12-1
S DATA MARS
TO 31 M.C./R.S.
CSO
12-3
INT DCS
PB SW
PB SW ADJ
R147
TRC PST
TRC PST
R146
TRC VR
11-1
TRC VR
TO TRC VR
TP6
IC10 (1/2)
SHMIT
DRUM FG
15-4
DRUM FG
TO D. MOTOR
SRH HEAD
20-5
L: SEARCH
Q33
TO 10, 12, 60 R/P Y, R/P C, TBC-1 (SA-T22)
RST
RESET
IC22
9-4
TAPE FWD
40, 41, 03
9-2
CTL PULSE
40, 03
7-1
SERVO REF
TO 40 SYSCON

4.11 HiFi AUDIO BLOCK DIAGRAM

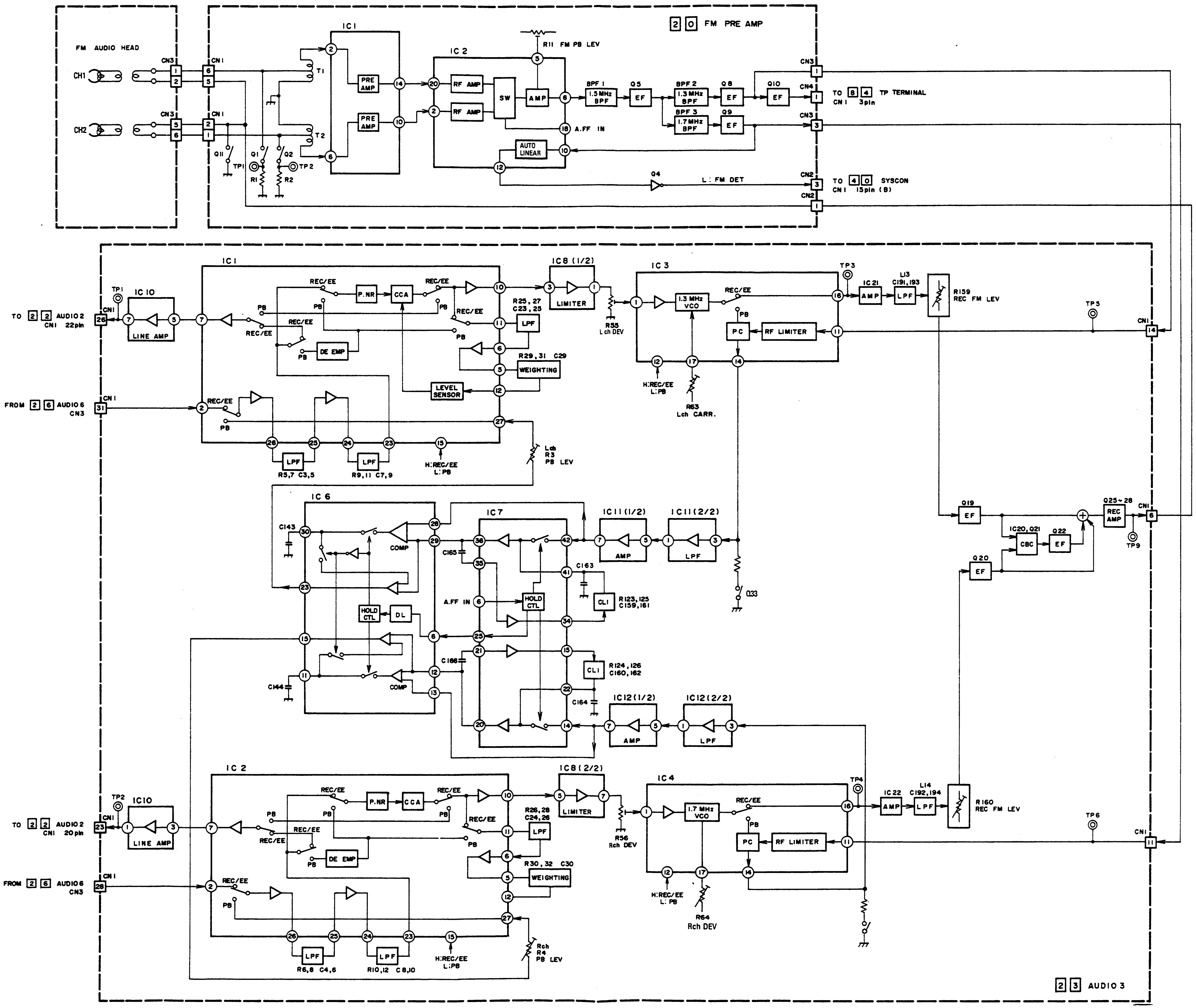

FM AUDIO HEAD
CH1
CH2
CN3
CN1
IC1
PRE AMP
T1
T2
Q11
Q1
Q2
TP1
TP2
R1
R2
IC2
RF AMP
SW
AMP
R11 FM PB LEV
A.FF IN
AUTO LINEAR
BPF 1 1.5MHz BPF
Q5
EF
BPF 2 1.3MHz BPF
BPF 3 1.7MHz BPF
Q8
Q9
Q10
Q4
L: FM DET
2 0 FM PRE AMP
CN4
CN2
TO 8 4 TP TERMINAL CN1 3pin
TO 4 0 SYSCON CN1 15pin (8)
TO 2 2 AUDIO 2 CN1 22pin
FROM 2 6 AUDIO 6 CN3
IC10
LINE AMP
REC/EE
PB
P.NR
CCA
DE EMP
LPF
WEIGHTING
LEVEL SENSOR
R25, 27 C23, 25
R29, 31 C29
R5,7 C3,5
R9,11 C7,9
H:REC/EE L:PB
Lch R3 PB LEV
IC8 (1/2)
LIMITER
R55 Lch DEV
IC3
1.3 MHz VCO
PC
RF LIMITER
R63 Lch CARR.
TP3
IC21
AMP
L13 C191,193
R139 REC FM LEV
TP5
IC6
C143
COMP
HOLD CTL
DL
C144
IC7
C165
C166
C163
C164
CLI
R123,125 C159,161
R124,126 C160,162
IC11(1/2)
IC11(2/2)
Q33
IC12(1/2)
IC12(2/2)
Q19
IC20,Q21
CBC
Q22
Q20
Q25~28
REC AMP
TP9
IC2
TO 2 2 AUDIO 2 CN1 20pin
R26,28 C24,26
R30, 32 C30
R6,8 C4,6
R10,12 C8,10
Rch R4 PB LEV
IC8 (2/2)
R56 Rch DEV
IC4
1.7 MHz VCO
R64 Rch DEV
TP4
IC22
L14 C192,194
R160 REC FM LEV
TP6
2 3 AUDIO 3
A
B
C
D
E
F
G
H
1
2
3
4
5
6

4.12 NORMAL AUDIO BLOCK DIAGRAM

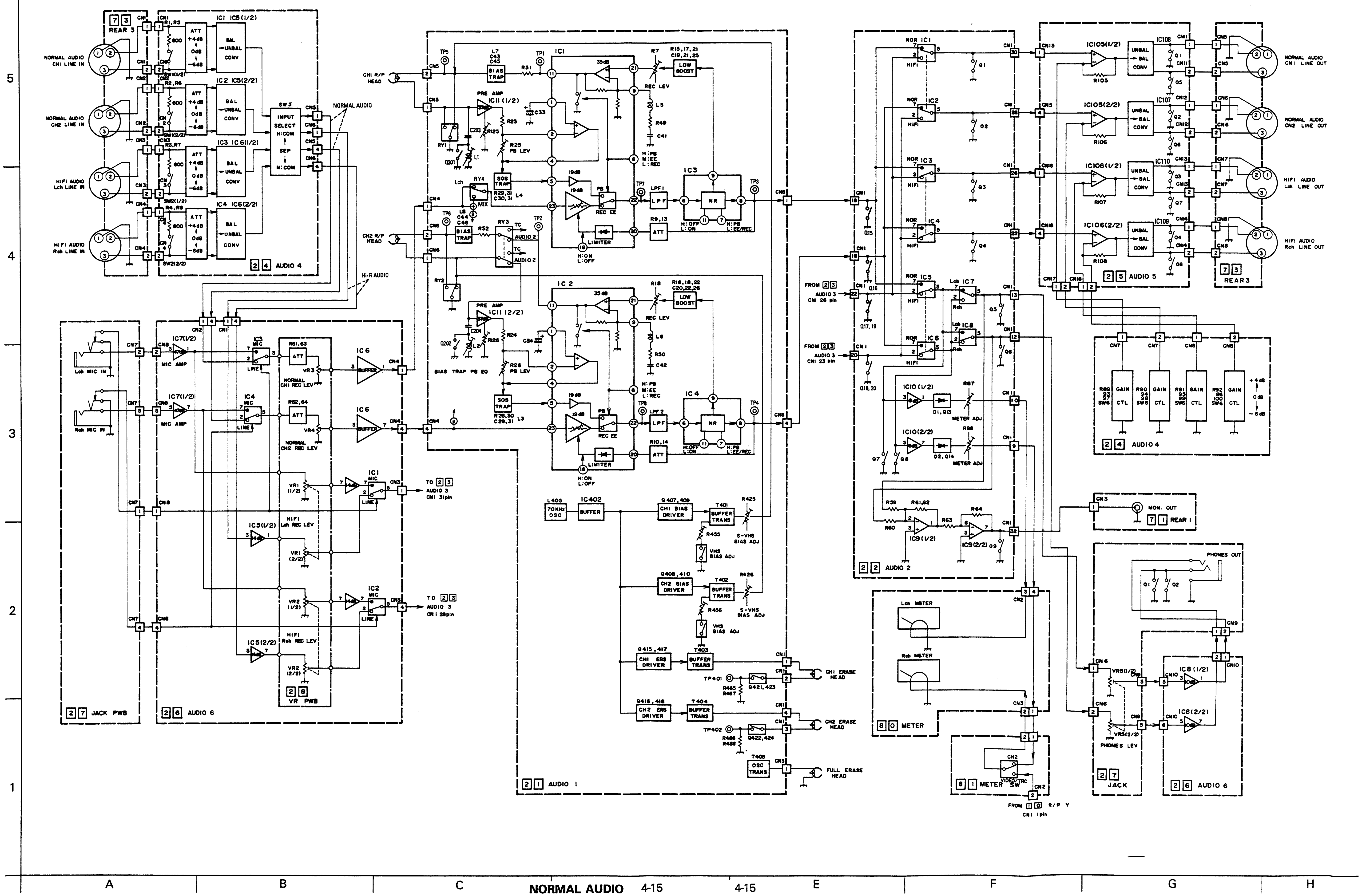
6
5
4
3
2
1
A
B
C
E
F
G
H
7 3 REAR 3
NORMAL AUDIO CH1 LINE IN
NORMAL AUDIO CH2 LINE IN
HIFI AUDIO Lch LINE IN
HIFI AUDIO Rch LINE IN
ATT +4dB 0dB −6dB
BAL →UNBAL CONV
IC1 IC5(1/2)
IC2 IC5(2/2)
IC3 IC6(1/2)
IC4 IC6(2/2)
SW5
INPUT SELECT H:COM SEP N:COM
NORMAL AUDIO
Hi-Fi AUDIO
2 4 AUDIO 4
Lch MIC IN
Rch MIC IN
2 7 JACK PWB
IC7(1/2) MIC AMP
IC7(1/2) MIC AMP
IC3 MIC LINE
IC4 MIC LINE
ATT
VR3 NORMAL CH1 REC LEV
VR4 NORMAL CH2 REC LEV
IC6 BUFFER
IC1 MIC LINE
IC2 MIC LINE
VR1 (1/2)
VR1 (2/2)
VR2 (1/2)
VR2 (2/2)
IC5(1/2) HIFI Lch REC LEV
IC5(2/2) HIFI Rch REC LEV
2 8 VR PWB
2 6 AUDIO 6
TO 2 3 AUDIO 3 CN1 31pin
TO 2 3 AUDIO 3 CN1 28pin
CH1 R/P HEAD
CH2 R/P HEAD
TP5
L7 C43 C45 BIAS TRAP
R51
TP1
IC1
PRE AMP IC11(1/2)
R123 R23
R25 PB LEV
SOS TRAP
R29,31 C30,31 L4
RY1
RY2
RY3
RY4
Lch MIX
L8 C44 C46 BIAS TRAP
R52
TC AUDIO 2
TP2
33dB
19dB
PB REC EE
LIMITER
H:ON L:OFF
R7 REC LEV
R15,17,21 C19,21,25 LOW BOOST
L5 R49 C41
H:PB M:EE L:REC
TP7 LPF1
R9,13 ATT
IC3 NR
H:OFF L:ON
H:PB L:EE/REC
TP3
IC 2
PRE AMP IC11(2/2)
R24 R126
BIAS TRAP PB EQ
R26 PB LEV
R28,30 C29,31 L3
R18 REC LEV
R16,18,22 C20,22,26 LOW BOOST
L6 R50 C42
TP8 LPF2
R10,14 ATT
IC4 NR
TP4
L405 70KHz OSC
IC402 BUFFER
Q407,409 CH1 BIAS DRIVER
T401 BUFFER TRANS
R425 S-VHS BIAS ADJ
R435 VHS BIAS ADJ
Q408,410 CH2 BIAS DRIVER
T402 BUFFER TRANS
R426 S-VHS BIAS ADJ
R436 VHS BIAS ADJ
Q415,417 CH1 ERS DRIVER
T403 BUFFER TRANS
TP401 R465 R467 Q421,423
CH1 ERASE HEAD
Q416,418 CH2 ERS DRIVER
T404 BUFFER TRANS
TP402 R466 R468 Q422,424
CH2 ERASE HEAD
T405 OSC TRANS
FULL ERASE HEAD
2 1 AUDIO 1
NOR IC1 HIFI
NOR IC2 HIFI
NOR IC3 HIFI
NOR IC4 HIFI
NOR IC5 HIFI
NOR IC6 HIFI
Lch IC7 Rch
Lch IC8 Rch
Q1 Q2 Q3 Q4 Q5 Q6
Q15 Q16 Q17,19 Q18,20
FROM 2 3 AUDIO 3 CN1 26 pin
FROM 2 3 AUDIO 3 CN1 23 pin
IC10(1/2) D1,Q13 R87 METER ADJ
IC10(2/2) D2,Q14 R88 METER ADJ
Q7 Q8
R59 R61,62 R60 R63 R64
IC9(1/2) IC9(2/2) Q9
2 2 AUDIO 2
IC105(1/2) R105
IC105(2/2) R106
IC106(1/2) R107
IC106(2/2) R108
UNBAL →BAL CONV
IC108 IC107 IC110 IC109
2 5 AUDIO 5
NORMAL AUDIO CH1 LINE OUT
NORMAL AUDIO CH2 LINE OUT
HIFI AUDIO Lch LINE OUT
HIFI AUDIO Rch LINE OUT
7 3 REAR3
R89 93 97 SW6 GAIN CTL
R90 94 98 SW6 GAIN CTL
R91 95 99 SW6 GAIN CTL
R92 96 100 SW6 GAIN CTL
+4dB 0dB −6dB
2 4 AUDIO 4
MON. OUT
7 1 REAR 1
Lch METER
Rch METER
8 0 METER
8 1 METER SW
VIDEO/TRC
FROM 1 0 R/P Y CN1 1pin
PHONES OUT
VR5(1/2) VR5(2/2) PHONES LEV
IC8(1/2) IC8(2/2)
2 7 JACK
2 6 AUDIO 6

4.13 AV MICOM/ONSCREEN BLOCK DIAGRAM

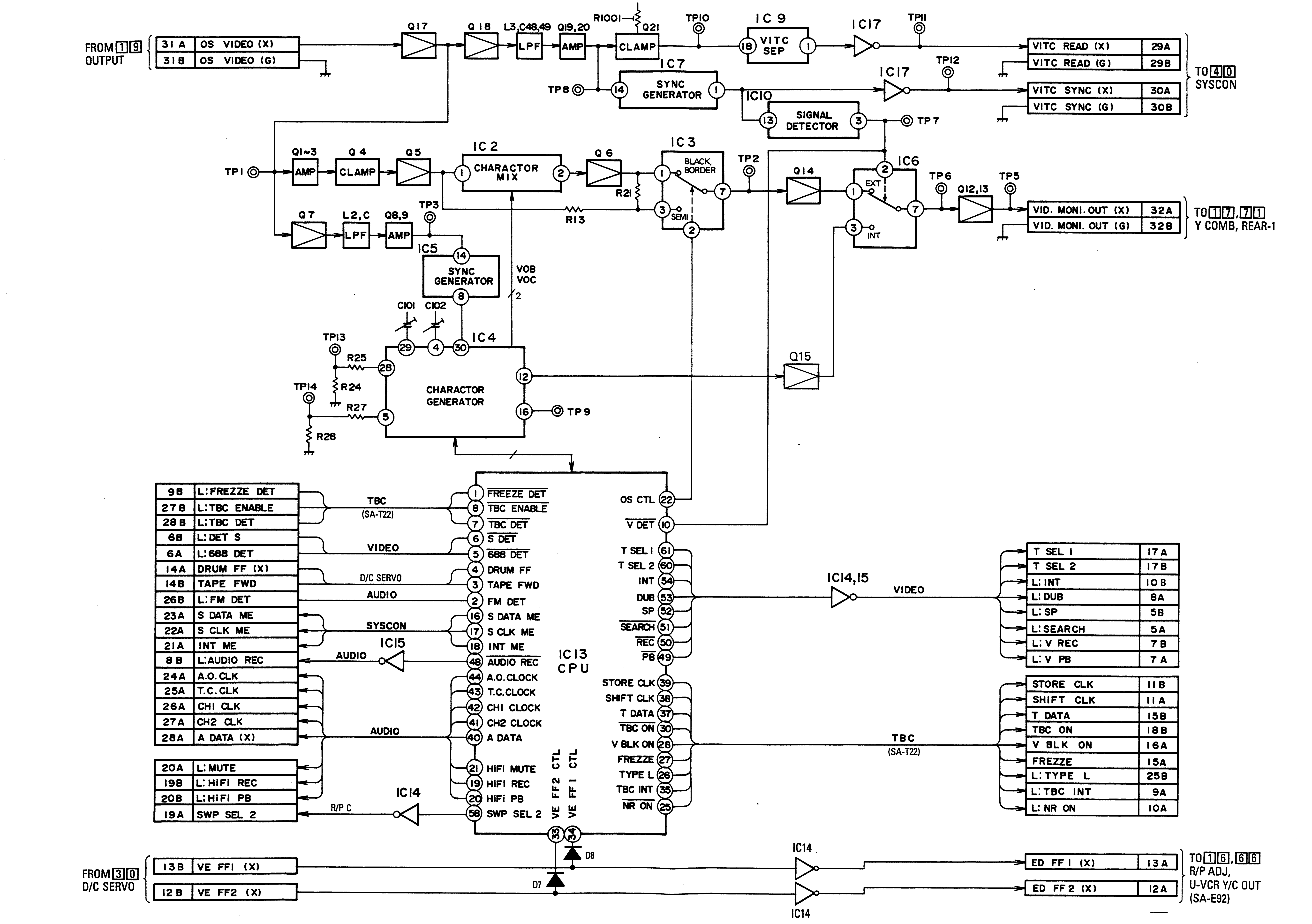
FROM 19 OUTPUT
31 A OS VIDEO (X)
31 B OS VIDEO (G)
Q17
Q18
L3,C48,49
LPF
Q19,20
AMP
R1001
Q21
CLAMP
TP10
IC9
VITC SEP
IC17
TP11
TP8
IC7
SYNC GENERATOR
IC10
SIGNAL DETECTOR
TP12
TP7
VITC READ (X) 29A
VITC READ (G) 29B
VITC SYNC (X) 30A
VITC SYNC (G) 30B
TO 40 SYSCON
TP1
Q1~3
AMP
Q4
CLAMP
Q5
IC2
CHARACTOR MIX
Q6
IC3
BLACK, BORDER
SEMI
R21
R13
TP2
Q14
IC6
EXT
INT
TP6
TP5
Q12,13
VID. MONI. OUT (X) 32A
VID. MONI. OUT (G) 32B
TO 17, 71 Y COMB, REAR-1
Q7
L2,C
LPF
Q8,9
AMP
TP3
IC5
SYNC GENERATOR
VOB
VOC
2
C101
C102
IC4
TP13
R25
R24
TP14
R27
R28
CHARACTOR GENERATOR
TP9
Q15
9B L:FREZZE DET
27B L:TBC ENABLE
28B L:TBC DET
6B L:DET S
6A L:688 DET
14A DRUM FF (X)
14B TAPE FWD
26B L:FM DET
23A S DATA ME
22A S CLK ME
21A INT ME
8B L:AUDIO REC
24A A.O. CLK
25A T.C. CLK
26A CH1 CLK
27A CH2 CLK
28A A DATA (X)
20A L:MUTE
19B L:HIFI REC
20B L:HIFI PB
19A SWP SEL 2
TBC
(SA-T22)
VIDEO
D/C SERVO
AUDIO
SYSCON
IC15
AUDIO
AUDIO
IC14
R/P C
1 FREEZE DET
8 TBC ENABLE
7 TBC DET
6 S DET
5 688 DET
4 DRUM FF
3 TAPE FWD
2 FM DET
16 S DATA ME
17 S CLK ME
18 INT ME
48 AUDIO REC
44 A.O. CLOCK
43 T.C. CLOCK
42 CH1 CLOCK
41 CH2 CLOCK
40 A DATA
21 HIFI MUTE
19 HIFI REC
20 HIFi PB
58 SWP SEL 2
IC13 CPU
VE FF2 CTL
VE FF1 CTL
33
34
OS CTL 22
V DET 10
T SEL 1 61
T SEL 2 60
INT 54
DUB 53
SP 52
SEARCH 51
REC 50
PB 49
STORE CLK 39
SHIFT CLK 38
T DATA 37
TBC ON 30
V BLK ON 28
FREZZE 27
TYPE L 26
TBC INT 35
NR ON 25
IC14,15
VIDEO
TBC
(SA-T22)
T SEL 1 17A
T SEL 2 17B
L:INT 10B
L:DUB 8A
L:SP 5B
L:SEARCH 5A
L:V REC 7B
L:V PB 7A
STORE CLK 11B
SHIFT CLK 11A
T DATA 15B
TBC ON 18B
V BLK ON 16A
FREZZE 15A
L:TYPE L 25B
L:TBC INT 9A
L:NR ON 10A
D8
D7
IC14
IC14
FROM 30 D/C SERVO
13B VE FF1 (X)
12B VE FF2 (X)
ED FF1 (X) 13A
ED FF2 (X) 12A
TO 16, 66 R/P ADJ, U-VCR Y/C OUT (SA-E92)

4.14 SYSCON BLOCK DIAGRAM

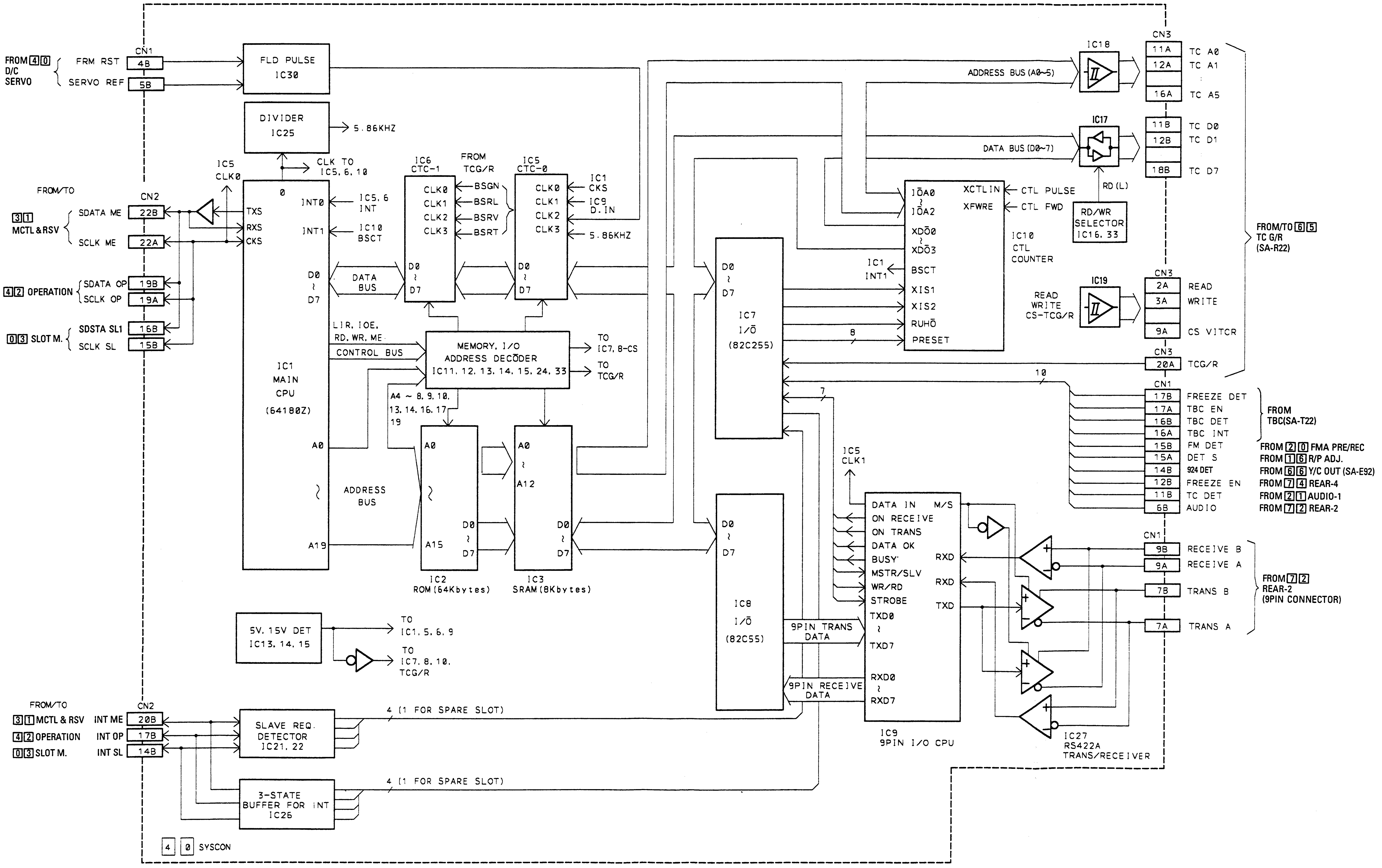
FROM 4 0 D/C SERVO
CN1
FRM RST 4B
SERVO REF 5B
FLD PULSE IC30
DIVIDER IC25
5.86KHZ
CLK TO IC5, 6, 10
IC5 CLK0
FROM/TO
CN2
3 1 MCTL & RSV
SDATA ME 22B
SCLK ME 22A
4 2 OPERATION
SDATA OP 19B
SCLK OP 19A
0 3 SLOT M.
SDSTA SL1 16B
SCLK SL 15B
TXS
RXS
CKS
0
INT0
INT1
IC5, 6 INT
IC10 BSCT
D0 ~ D7
DATA BUS
IC1 MAIN CPU (64180Z)
A0 ~ A19
ADDRESS BUS
LIR, IOE, RD, WR, ME
CONTROL BUS
IC6 CTC-1
CLK0 CLK1 CLK2 CLK3
FROM TCG/R
BSGN
BSRL
BSRV
BSRT
IC5 CTC-0
IC1 CKS
IC9 D.IN
5.86KHZ
MEMORY, I/O ADDRESS DECODER IC11, 12, 13, 14, 15, 24, 33
TO IC7, 8-CS
TO TCG/R
A4 ~ 8, 9, 10, 13, 14, 16, 17, 19
IC2 ROM (64Kbytes)
A0 ~ A15
IC3 SRAM (8Kbytes)
A0 ~ A12
5V, 15V DET IC13, 14, 15
TO IC1, 5, 6, 9
TO IC7, 8, 10, TCG/R
FROM/TO
3 1 MCTL & RSV INT ME 20B
4 2 OPERATION INT OP 17B
0 3 SLOT M. INT SL 14B
SLAVE REQ. DETECTOR IC21, 22
3-STATE BUFFER FOR INT IC26
4 (1 FOR SPARE SLOT)
4 (1 FOR SPARE SLOT)
4 0 SYSCON
IC7 I/O (82C255)
IC8 I/O (82C55)
9PIN TRANS DATA
9PIN RECEIVE DATA
IC1 INT1
8
IC10 CTL COUNTER
IOA0 ~ IOA2
XDO0 ~ XDO3
BSCT
XIS1
XIS2
RUHO
PRESET
XCTLIN
XFWRE
CTL PULSE
CTL FWD
ADDRESS BUS (A0~5)
DATA BUS (D0~7)
IC18
IC17
RD (L)
RD/WR SELECTOR IC16, 33
IC19
READ WRITE CS-TCG/R
CN3
11A TC A0
12A TC A1
16A TC A5
11B TC D0
12B TC D1
18B TC D7
2A READ
3A WRITE
9A CS VITCR
20A TCG/R
FROM/TO 6 5 TC G/R (SA-R22)
10
7
CN1
17B FREEZE DET
17A TBC EN
16B TBC DET
16A TBC INT
FROM TBC(SA-T22)
15B FM DET
15A DET S
14B 924 DET
12B FREEZE EN
11B TC DET
6B AUDIO
FROM 2 0 FMA PRE/REC
FROM 1 6 R/P ADJ.
FROM 6 6 Y/C OUT (SA-E92)
FROM 7 4 REAR-4
FROM 2 1 AUDIO-1
FROM 7 2 REAR-2
IC5 CLK1
DATA IN
ON RECEIVE
ON TRANS
DATA OK
BUSY'
MSTR/SLV
WR/RD
STROBE
TXD0 ~ TXD7
RXD0 ~ RXD7
M/S
RXD
RXD
TXD
IC9 9PIN I/O CPU
IC27 RS422A TRANS/RECEIVER
9B RECEIVE B
9A RECEIVE A
7B TRANS B
7A TRANS A
FROM 7 2 REAR-2 (9PIN CONNECTOR)
1 2 3 4 5 6
A B C D E F G H

4.15 M-CTL & REEL SERVO BLOCK DIAGRAM

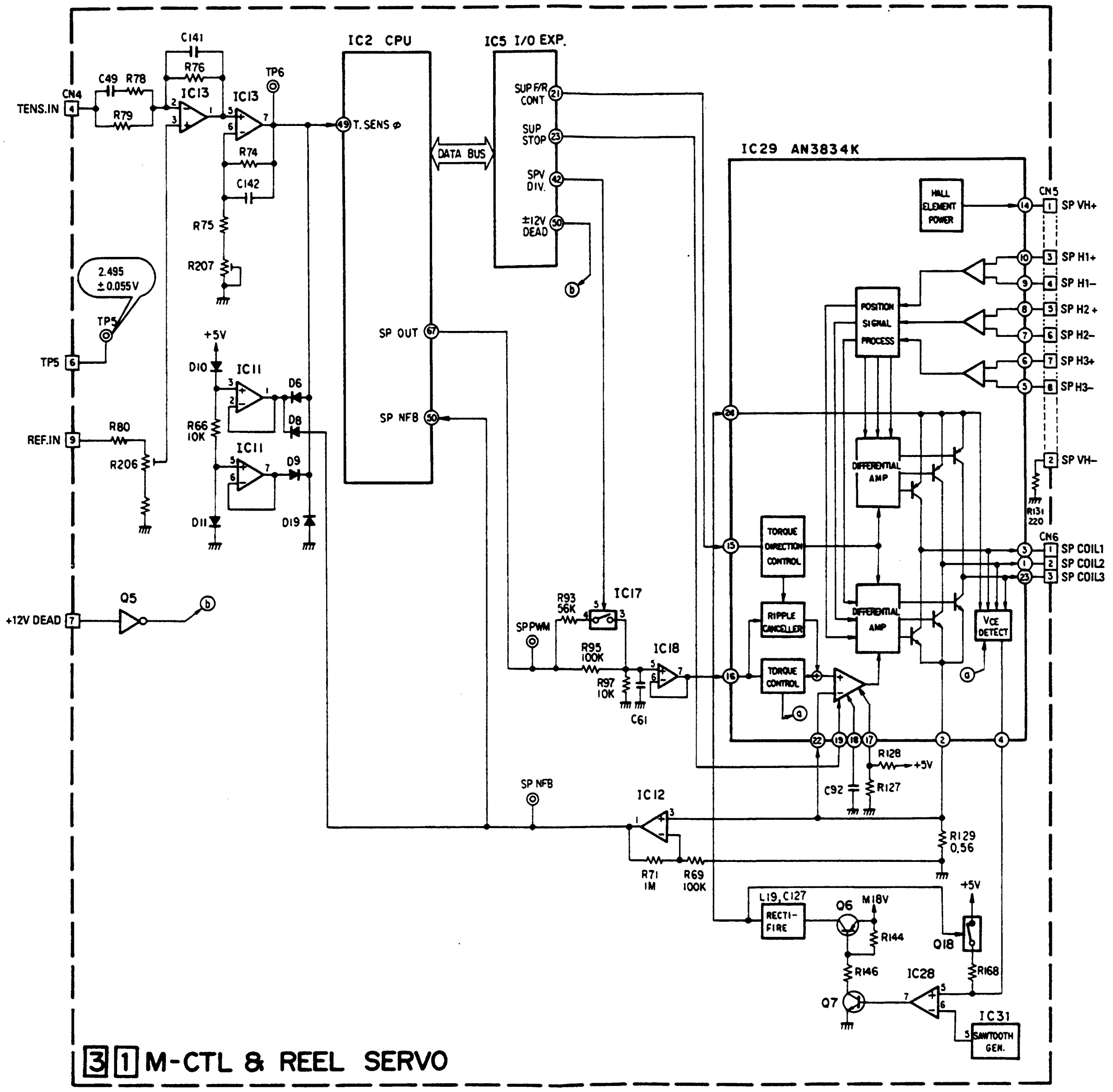
TENS.IN
CN4
4
C49
R78
R79
C141
R76
IC13
IC13
TP6
R74
C142
R75
R207
2.495
± 0.055V
TP5
TP5
6
REF.IN
9
R80
R206
+5V
D10
IC11
D6
R66
10K
D8
IC11
D9
D11
D19
+12V DEAD
7
Q5
b
IC2 CPU
49 T. SENS φ
DATA BUS
SP OUT 67
SP NFB 50
IC5 I/O EXP.
SUP F/R CONT 21
SUP STOP 23
SPV DIV. 42
±12V DEAD 50
b
IC29 AN3834K
HALL ELEMENT POWER
POSITION SIGNAL PROCESS
DIFFERENTIAL AMP
DIFFERENTIAL AMP
TORQUE DIRECTION CONTROL
RIPPLE CANCELLER
TORQUE CONTROL
VCE DETECT
a
a
a
CN5
1 SP VH+
3 SP H1+
4 SP H1-
5 SP H2 +
6 SP H2-
7 SP H3+
8 SP H3-
2 SP VH-
R131
220
CN6
1 SP COIL1
2 SP COIL2
3 SP COIL3
14
10
9
8
7
6
5
24
15
16
3
1
23
22
19
18
17
2
4
R93
56K
IC17
SP PWM
R95
100K
R97
10K
C61
IC18
R128
+5V
C92
R127
SP NFB
IC12
R129
0.56
R71
1M
R69
100K
L19, C127
RECTI-FIRE
Q6
M18V
R144
R146
Q7
IC28
+5V
Q18
R168
IC31
SAWTOOTH GEN.
3 1 M-CTL & REEL SERVO

4.16 OVERALL WIRING DIAGRAM

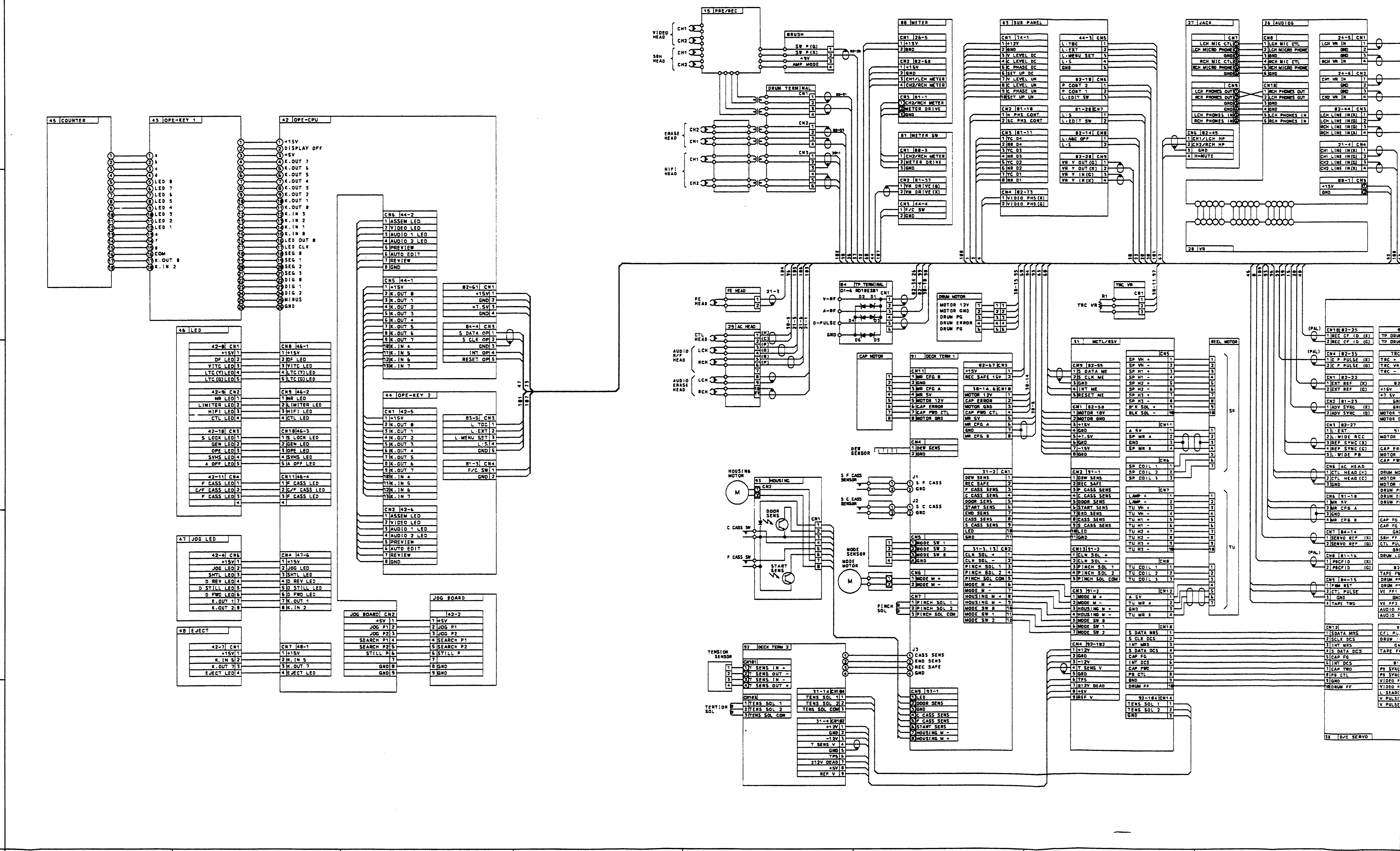
6
5
4
3
2
1
45 COUNTER
43 OPE-KEY 1
42 OPE-CPU
44 OPE-KEY 2
46 LED
47 JOG LED
48 EJECT
JOG BOARD
15 PRE/REC
VIDEO HEAD
SEH HEAD
ERASE HEAD
HIFI HEAD
BRUSH
DRUM TERMINAL
88 METER
81 METER SW
83 SUB PANEL
27 JACK
26 AUDIOS
28 VR
FE HEAD
29 AC HEAD
CTL HEAD
AUDIO R/P HEAD
AUDIO ERASE HEAD
84 TP TERMINAL
DRUM MOTOR
TRC VR
CAP MOTOR
91 DECK TERM 1
31 MCTL/RSV
REEL MOTOR
DEW SENSOR
HOUSING MOTOR
93 HOUSING
DOOR SENS
START SENS
C CASS SW
F CASS SW
S F CASS SENSOR
S C CASS SENSOR
MODE SENSOR
MODE MOTOR
PINCH SOL
TENSION SENSOR
TENTION SOL
92 DECK TERM 2
38 D/C SERVO

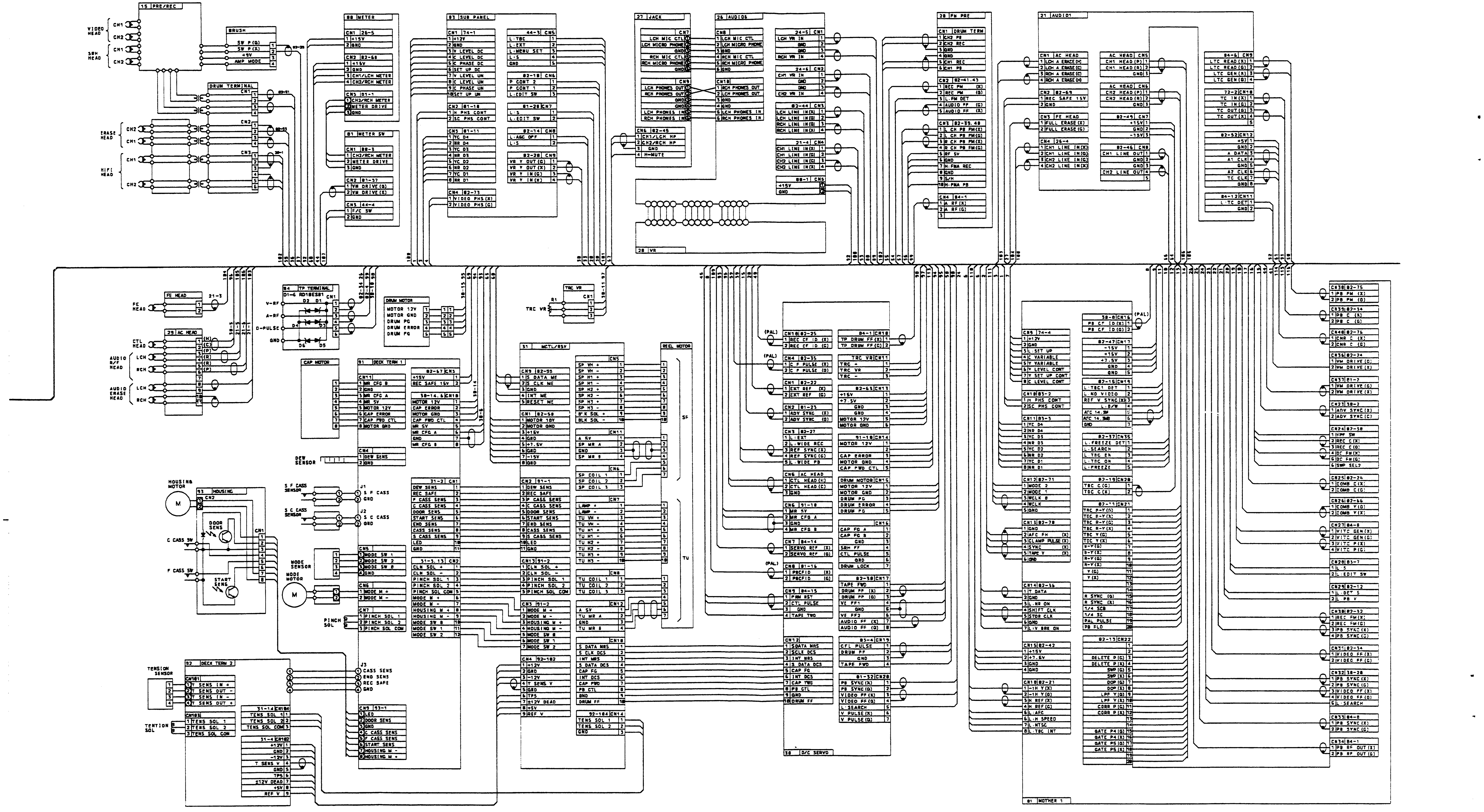
15 PRE/REC
VIDEO HEAD
SBH HEAD
BRUSH
DRUM TERMINAL
ERASE HEAD
HIFI HEAD
88 METER
81 METER SW
83 SUB PANEL
27 JACK
26 AUDIO6
28 VR
28 FM PRE
21 AUDIO1
FE HEAD
29 AC HEAD
CTL HEAD
AUDIO R/P HEAD
AUDIO ERASE HEAD
84 TP TERMINAL
DRUM MOTOR
TRC VR
CAP MOTOR
91 DECK TERM 1
31 MCTL/RSV
REEL MOTOR
SF
TU
DEW SENSOR
HOUSING MOTOR
93 HOUSING
DOOR SENS
C CASS SW
F CASS SW
START SENS
S F CASS SENSOR
S C CASS SENSOR
MODE SENSOR
MODE MOTOR
PINCH SOL
TENSION SENSOR
TENSION SOL
92 DECK TERM 2
38 D/C SERVO
81 MOTHER 1
(PAL)

D E F **OVERALL WIRING** 4-18 4-18 I J K L

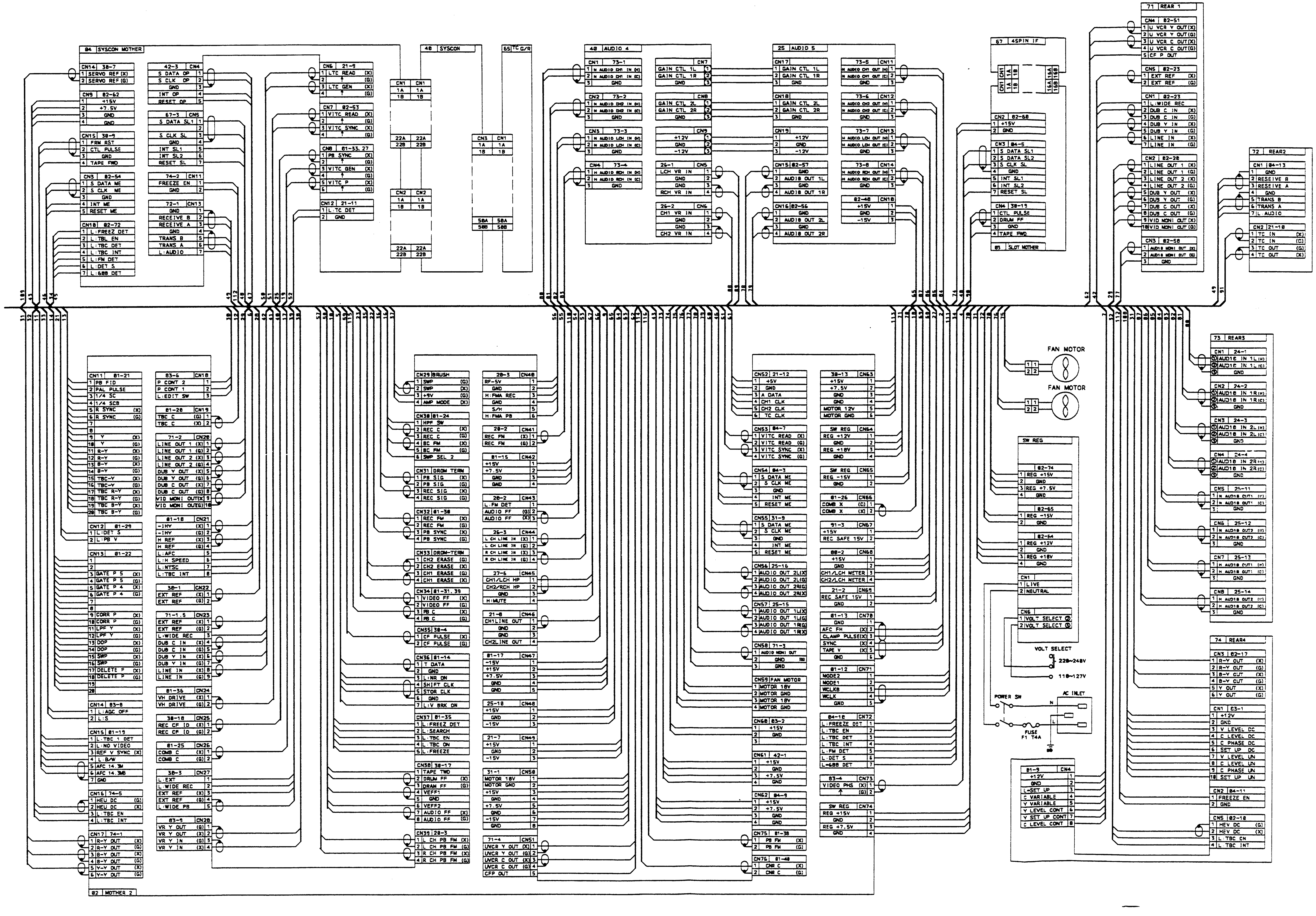
84 SYSCON MOTHER
48 SYSCON
65 TC G/R
48 AUDIO 4
25 AUDIO 5
67 4SPIN IF
85 SLOT MOTHER
71 REAR 1
72 REAR2
73 REAR3
74 REAR4
82 MOTHER 2
SW REG
FAN MOTOR
FAN MOTOR
VOLT SELECT
220-240V
110-127V
POWER SW
AC INLET
FUSE F1 T4A

M
N
O
Q
R
S
T

OVERALL WIRING 4-19 4-19

4.17 MOTHER BOARD-1 SCHEMATIC DIAGRAM

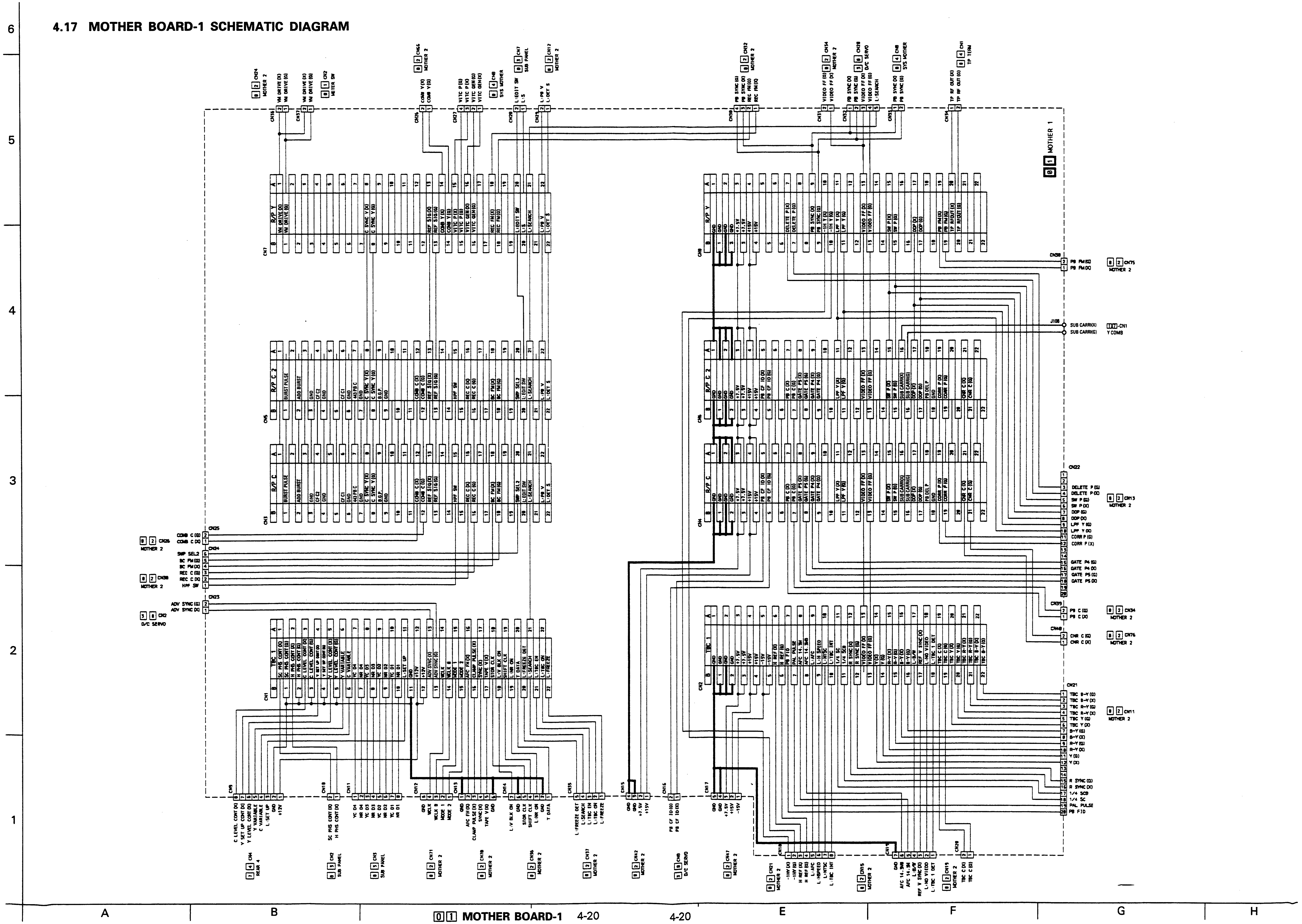

MOTHER 1
R/P Y
R/P C 2
R/P C
TBC 1
CN1
CN2
CN3
CN4
CN5
CN6
CN7
CN8
CN21
CN22
CN23
CN24
CN25
CN38
CN39
CN40
J108
SUB CARRI(X)
SUB CARRI(G)
Y COMB
MOTHER 2
D/C SERVO
SUB PANEL
REAR 4
METER SW
SYS MOTHER
TP TERM
6
5
4
3
2
1
A
B
E
F
G
H

4.18 MOTHER BOARD-1 CIRCUIT BOARD

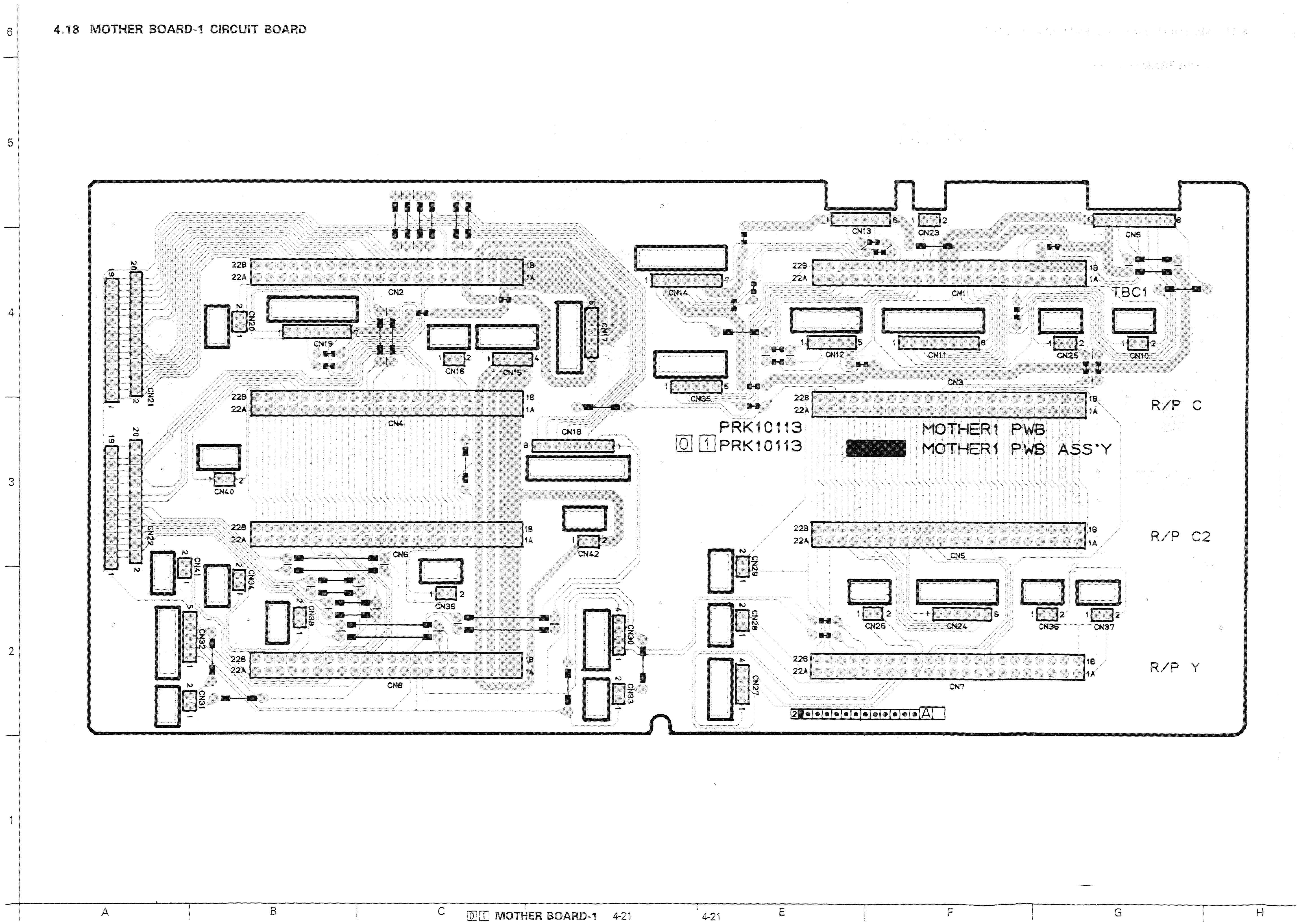
6
5
4
3
2
1
A
B
C
D
E
F
G
H
CN1
CN2
CN3
CN4
CN5
CN6
CN7
CN8
CN9
CN10
CN11
CN12
CN13
CN14
CN15
CN16
CN17
CN18
CN19
CN20
CN21
CN22
CN23
CN24
CN25
CN26
CN27
CN28
CN29
CN30
CN31
CN32
CN33
CN34
CN35
CN36
CN37
CN38
CN39
CN40
CN41
CN42
22B
22A
1B
1A
TBC1
R/P C
R/P C2
R/P Y
PRK10113
0 1 PRK10113
MOTHER1 PWB
MOTHER1 PWB ASS'Y
2
A

4.19 MOTHER BOARD-2 SCHEMATIC DIAGRAM

— DIAGRAM(1/2) —

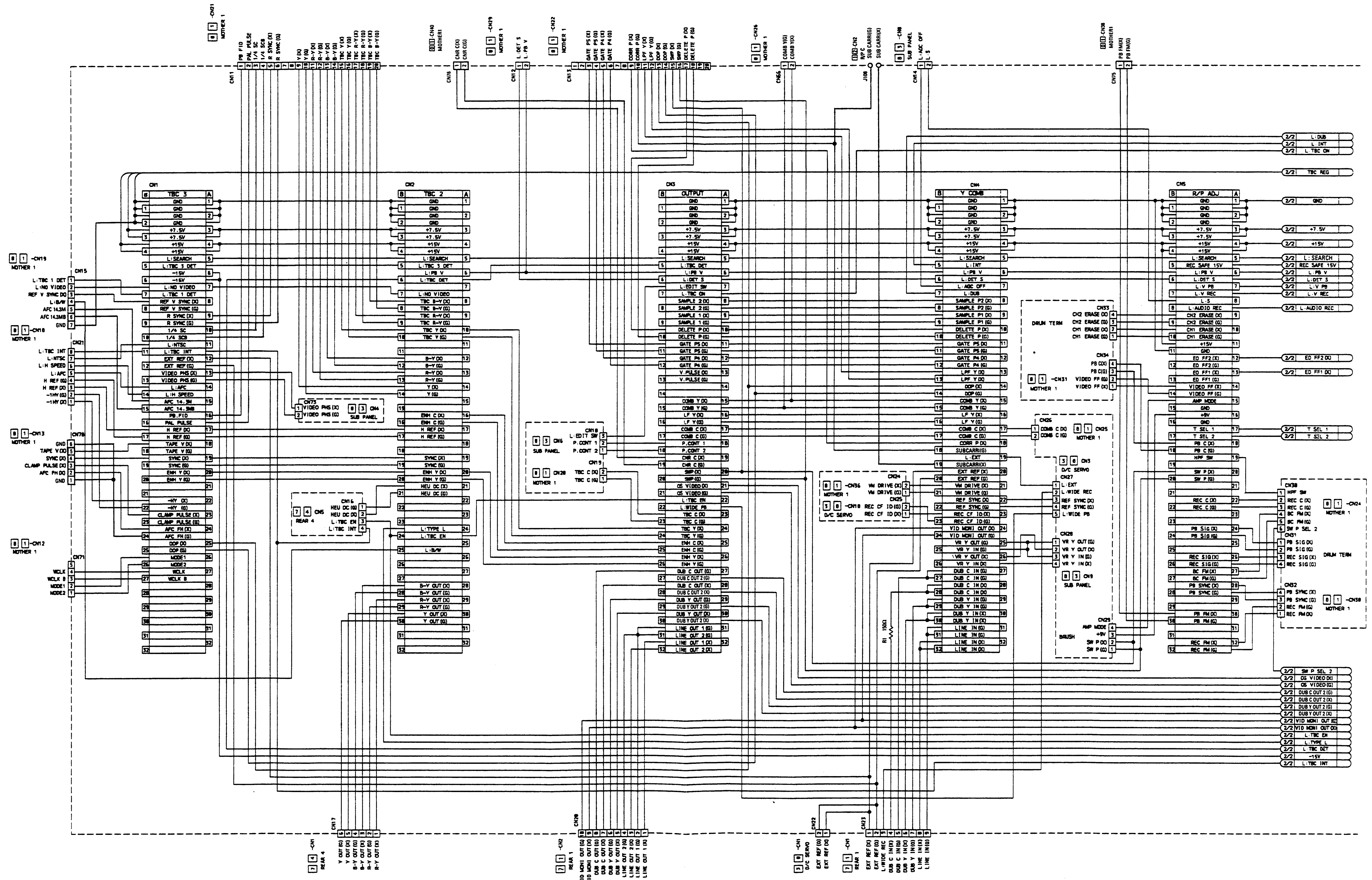

CN1
TBC 3
CN2
TBC 2
CN3
OUTPUT
CN4
Y COMB
CN5
R/P ADJ
CN15
CN21
CN78
CN71
CN16
CN73
CN18
CN19
CN24
CN25
CN26
CN28
CN29
CN31
CN32
CN33
CN34
CN38
DRUM TERM
SUB PANEL
D/C SERVO
REAR 4
MOTHER 1
BRUSH
R1 150Ω

— DIAGRAM(2/2) —

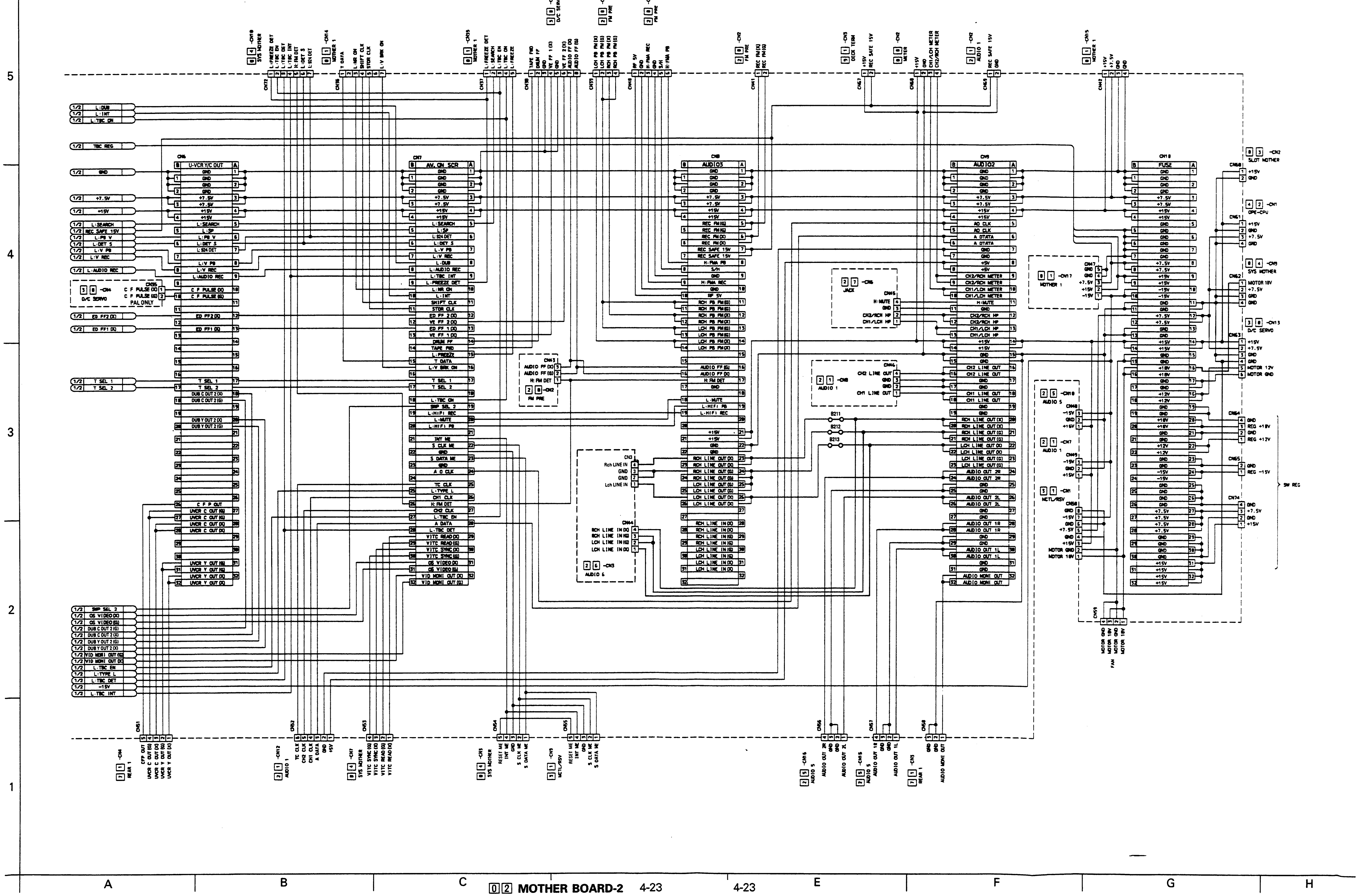
CN6
U-VCR Y/C OUT
CN7
AV, CN SCR
CN8
AUDIO3
CN9
AUDIO2
CN10
FUSE
CN43
CN44
CN45
CN46
CN47
CN3
CN64
SW REG
A
B
C
D
E
F
G
H
1
2
3
4
5
6

02 MOTHER BOARD-2 4-23

4.20 MOTHER BOARD-2 CIRCUIT BOARD

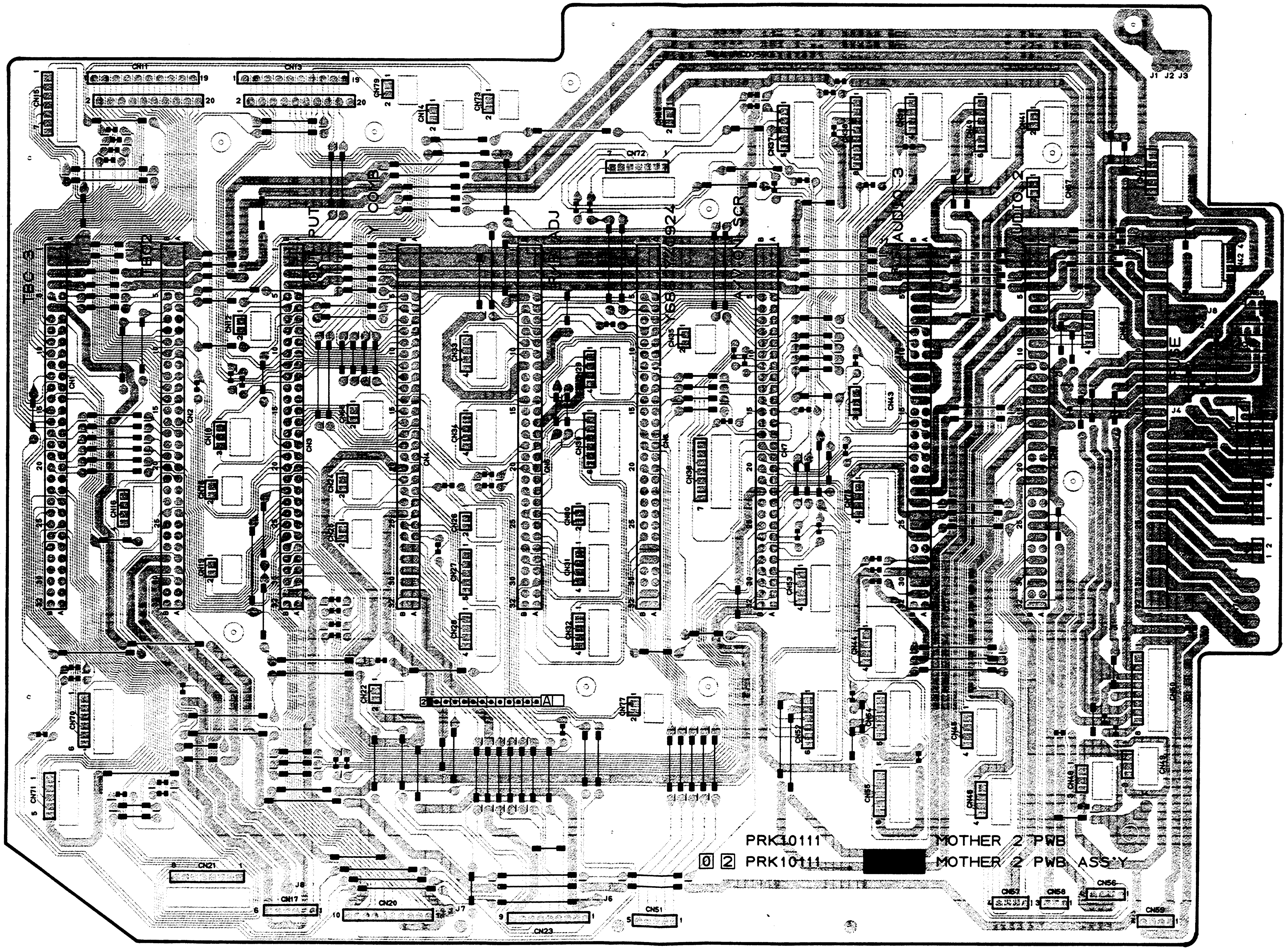
CN11
CN13
CN15
CN79
CN14
CN73
CN72
J1 J2 J3
CN41
CN37
CN47
TBC-3
CN1
CN2
CN3
CN4
CN5
CN6
CN7
CN8
CN9
CN16
CN12
CN10
CN18
CN19
CN22
CN42
CN43
CN44
CN45
CN46
CN48
CN49
CN50
CN53
CN55
CN70
CN71
CN17
CN20
CN21
CN23
CN51
CN56
CN57
CN58
CN59
J4
J5
J6
J7
J8
AUDIO 3
AUDIO 2
SCR
ADJ
PRK10111 MOTHER 2 PWB
0 2 PRK10111 MOTHER 2 PWB ASS'Y

4.21 SLOTMOTHER SCHEMATIC DIAGRAM

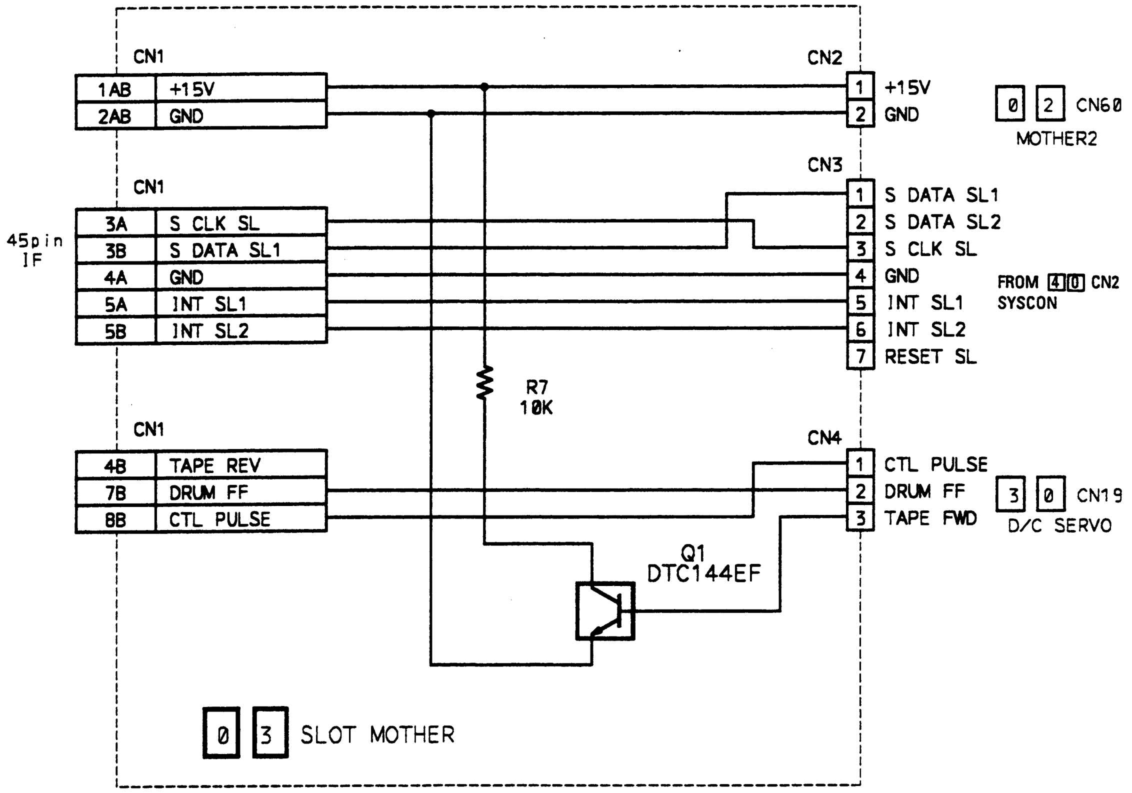
CN1
1AB +15V
2AB GND
CN1
3A S CLK SL
3B S DATA SL1
4A GND
5A INT SL1
5B INT SL2
45pin IF
CN1
4B TAPE REV
7B DRUM FF
8B CTL PULSE
CN2
1 +15V
2 GND
0 2 CN60
MOTHER2
CN3
1 S DATA SL1
2 S DATA SL2
3 S CLK SL
4 GND
5 INT SL1
6 INT SL2
7 RESET SL
FROM 4 0 CN2
SYSCON
R7
10K
CN4
1 CTL PULSE
2 DRUM FF
3 TAPE FWD
3 0 CN19
D/C SERVO
Q1
DTC144EF
0 3 SLOT MOTHER

4.22 SYSCON MOTHER SCHEMATIC DIAGRAM

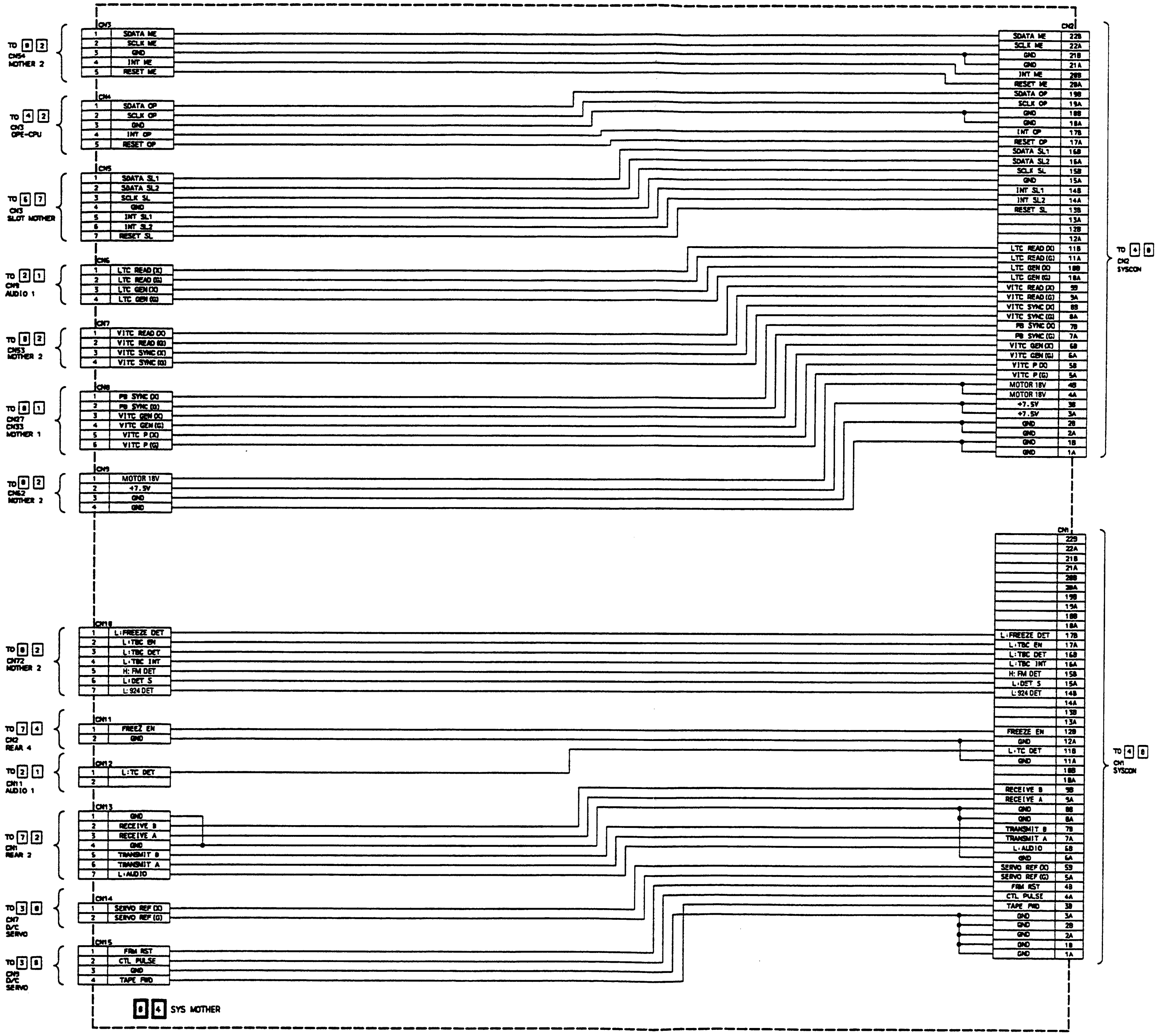
TO 0 2
CN54
MOTHER 2
CN3
1 SDATA ME
2 SCLK ME
3 GND
4 INT ME
5 RESET ME
TO 4 2
CN3
OPE-CPU
CN4
1 SDATA OP
2 SCLK OP
3 GND
4 INT OP
5 RESET OP
TO 6 7
CN3
SLOT MOTHER
CN5
1 SDATA SL1
2 SDATA SL2
3 SCLK SL
4 GND
5 INT SL1
6 INT SL2
7 RESET SL
TO 2 1
CN9
AUDIO 1
CN6
1 LTC READ (X)
2 LTC READ (G)
3 LTC GEN (X)
4 LTC GEN (G)
TO 0 2
CN53
MOTHER 2
CN7
1 VITC READ (X)
2 VITC READ (G)
3 VITC SYNC (X)
4 VITC SYNC (G)
TO 0 1
CN27
CN33
MOTHER 1
CN8
1 PB SYNC (X)
2 PB SYNC (G)
3 VITC GEN (X)
4 VITC GEN (G)
5 VITC P (X)
6 VITC P (G)
TO 0 2
CN62
MOTHER 2
CN9
1 MOTOR 18V
2 +7.5V
3 GND
4 GND
CN2
SDATA ME 22B
SCLK ME 22A
GND 21B
GND 21A
INT ME 20B
RESET ME 20A
SDATA OP 19B
SCLK OP 19A
GND 18B
GND 18A
INT OP 17B
RESET OP 17A
SDATA SL1 16B
SDATA SL2 16A
SCLK SL 15B
GND 15A
INT SL1 14B
INT SL2 14A
RESET SL 13B
13A
12B
12A
LTC READ (X) 11B
LTC READ (G) 11A
LTC GEN (X) 10B
LTC GEN (G) 10A
VITC READ (X) 9B
VITC READ (G) 9A
VITC SYNC (X) 8B
VITC SYNC (G) 8A
PB SYNC (X) 7B
PB SYNC (G) 7A
VITC GEN (X) 6B
VITC GEN (G) 6A
VITC P (X) 5B
VITC P (G) 5A
MOTOR 18V 4B
MOTOR 18V 4A
+7.5V 3B
+7.5V 3A
GND 2B
GND 2A
GND 1B
GND 1A
TO 4 0
CN2
SYSCON
TO 0 2
CN72
MOTHER 2
CN10
1 L:FREEZE DET
2 L:TBC EN
3 L:TBC DET
4 L:TBC INT
5 H: FM DET
6 L:DET S
7 L:924 DET
TO 7 4
CN2
REAR 4
CN11
1 FREEZ EN
2 GND
TO 2 1
CN11
AUDIO 1
CN12
1 L:TC DET
2
TO 7 2
CN1
REAR 2
CN13
1 GND
2 RECEIVE B
3 RECEIVE A
4 GND
5 TRANSMIT B
6 TRANSMIT A
7 L:AUDIO
TO 3 0
CN7
D/C
SERVO
CN14
1 SERVO REF (X)
2 SERVO REF (G)
TO 3 0
CN3
D/C
SERVO
CN15
1 FRM RST
2 CTL PULSE
3 GND
4 TAPE FWD
0 4 SYS MOTHER
CN1
22B
22A
21B
21A
20B
20A
19B
19A
18B
18A
L:FREEZE DET 17B
L:TBC EN 17A
L:TBC DET 16B
L:TBC INT 16A
H: FM DET 15B
L:DET S 15A
L:924 DET 14B
14A
13B
13A
FREEZE EN 12B
GND 12A
L:TC DET 11B
GND 11A
10B
10A
RECEIVE B 9B
RECEIVE A 9A
GND 8B
GND 8A
TRANSMIT B 7B
TRANSMIT A 7A
L:AUDIO 6B
GND 6A
SERVO REF (X) 5B
SERVO REF (G) 5A
FRM RST 4B
CTL PULSE 4A
TAPE FWD 3B
GND 3A
GND 2B
GND 2A
GND 1B
GND 1A
TO 4 0
CN1
SYSCON

4.23 SYSCON MOTHER & SLOT MOTHER CIRCUIT BOARDS

— SLOT MOTHER —

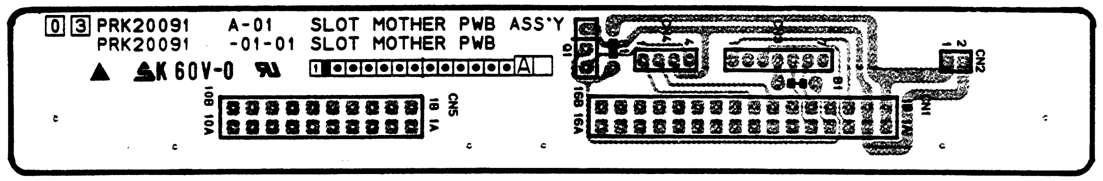
03 PRK20091 A-01 SLOT MOTHER PWB ASS'Y
PRK20091 -01-01 SLOT MOTHER PWB
K 60V-0
CN5
CN1
CN2
16B 1B
16A 1A

— SYSCON MOTHER —

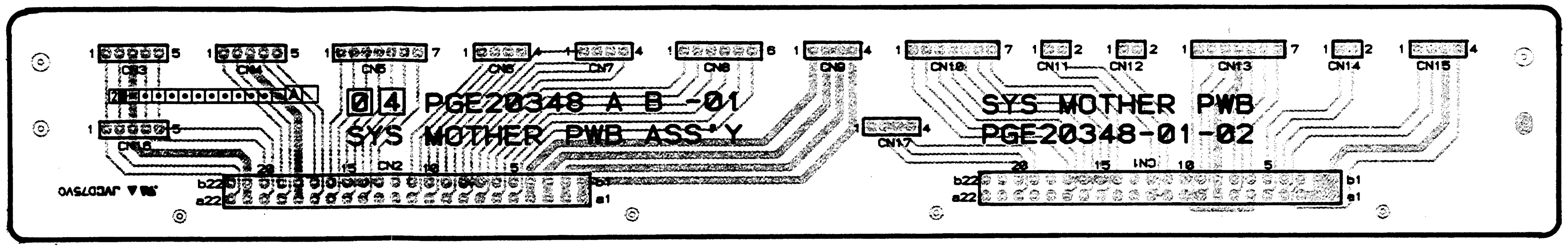
04 PGE20348 A B -01
SYS MOTHER PWB ASS'Y
SYS MOTHER PWB
PGE20348-01-02
CN3
CN4
CN5
CN6
CN7
CN8
CN9
CN10
CN11
CN12
CN13
CN14
CN15
CN16
CN17
CN2
CN1
b22
a22
b1
a1

4.24 FUSE SCHEMATIC DIAGRAM

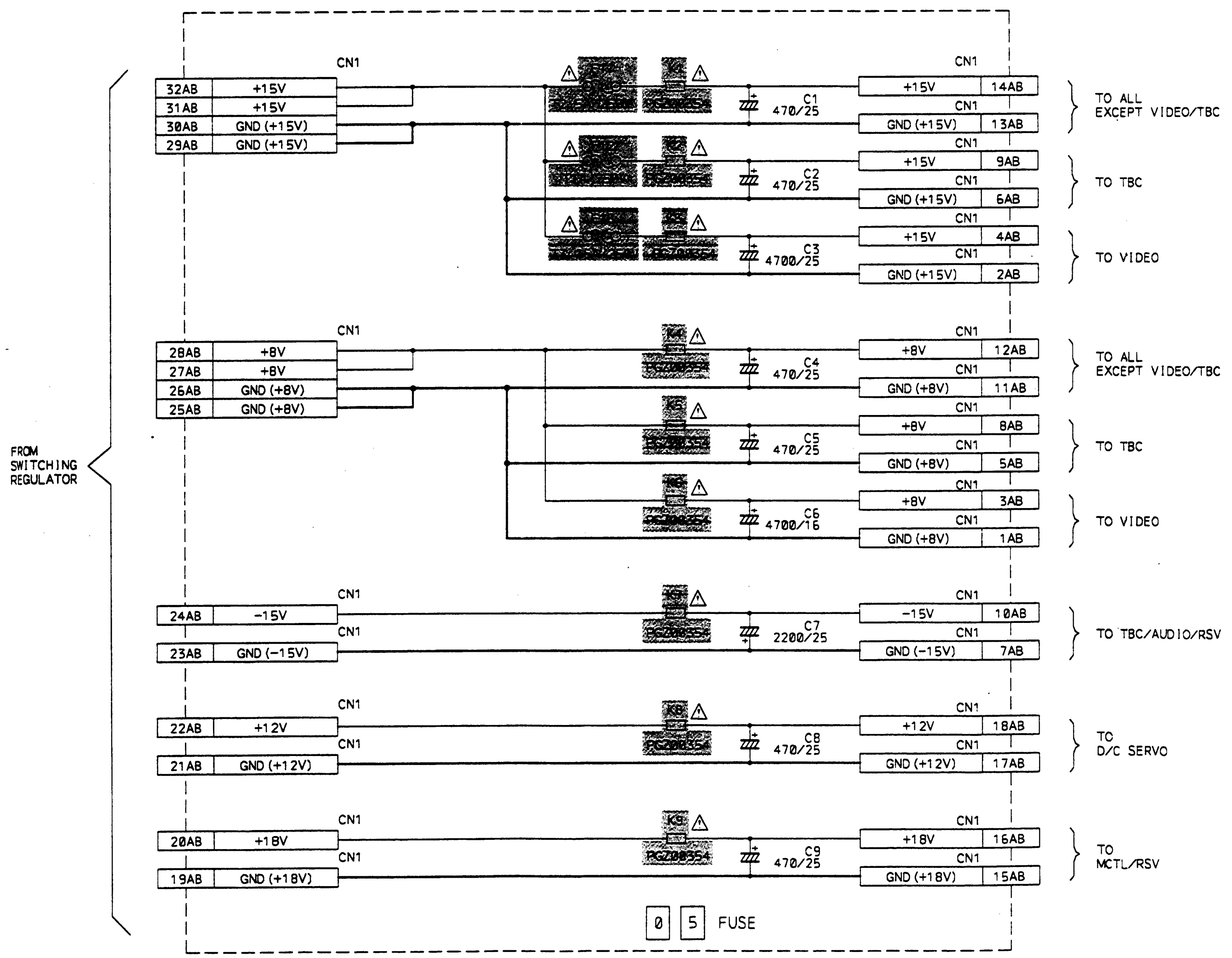
FROM SWITCHING REGULATOR
CN1
32AB +15V
31AB +15V
30AB GND (+15V)
29AB GND (+15V)
28AB +8V
27AB +8V
26AB GND (+8V)
25AB GND (+8V)
24AB -15V
23AB GND (-15V)
22AB +12V
21AB GND (+12V)
20AB +18V
19AB GND (+18V)
C1 470/25
C2 470/25
C3 4700/25
C4 470/25
C5 470/25
C6 4700/16
C7 2200/25
C8 470/25
C9 470/25
+15V 14AB
GND (+15V) 13AB
+15V 9AB
GND (+15V) 6AB
+15V 4AB
GND (+15V) 2AB
+8V 12AB
GND (+8V) 11AB
+8V 8AB
GND (+8V) 5AB
+8V 3AB
GND (+8V) 1AB
-15V 10AB
GND (-15V) 7AB
+12V 18AB
GND (+12V) 17AB
+18V 16AB
GND (+18V) 15AB
TO ALL EXCEPT VIDEO/TBC
TO TBC
TO VIDEO
TO ALL EXCEPT VIDEO/TBC
TO TBC
TO VIDEO
TO TBC/AUDIO/RSV
TO D/C SERVO
TO MCTL/RSV
PGZ0354
0 5 FUSE

— DC voltage —

SYMBOL No.		REC	PB
CONNECTOR			
CN1	32AB	—	15.1
	31AB	—	15.1
	30AB	—	0.0
	29AB	—	0.0
	28AB	—	7.6
	27AB	—	7.6
	26AB	—	0.0
	25AB	—	0.0
	24AB	—	-15.3
	23AB	—	0.0
	22AB	—	12.0
	21AB	—	0.0
	20AB	—	18.0
	19AB	—	0.0
	14AB	—	15.0
	13AB	—	0.0
	9AB	—	15.0
	6AB	—	0.0
	4AB	—	14.9
	2AB	—	0.0
	12AB	—	7.4
	11AB	—	0.0
	8AB	—	7.5
	5AB	—	0.0
	3AB	—	7.4
	1AB	—	0.0
	10AB	—	-15.2
	7AB	—	0.0
	18AB	—	12.0
	17AB	—	0.0
	16AB	—	17.9
	15AB	—	0.0

4.25 FUSE CIRCUIT BOARD

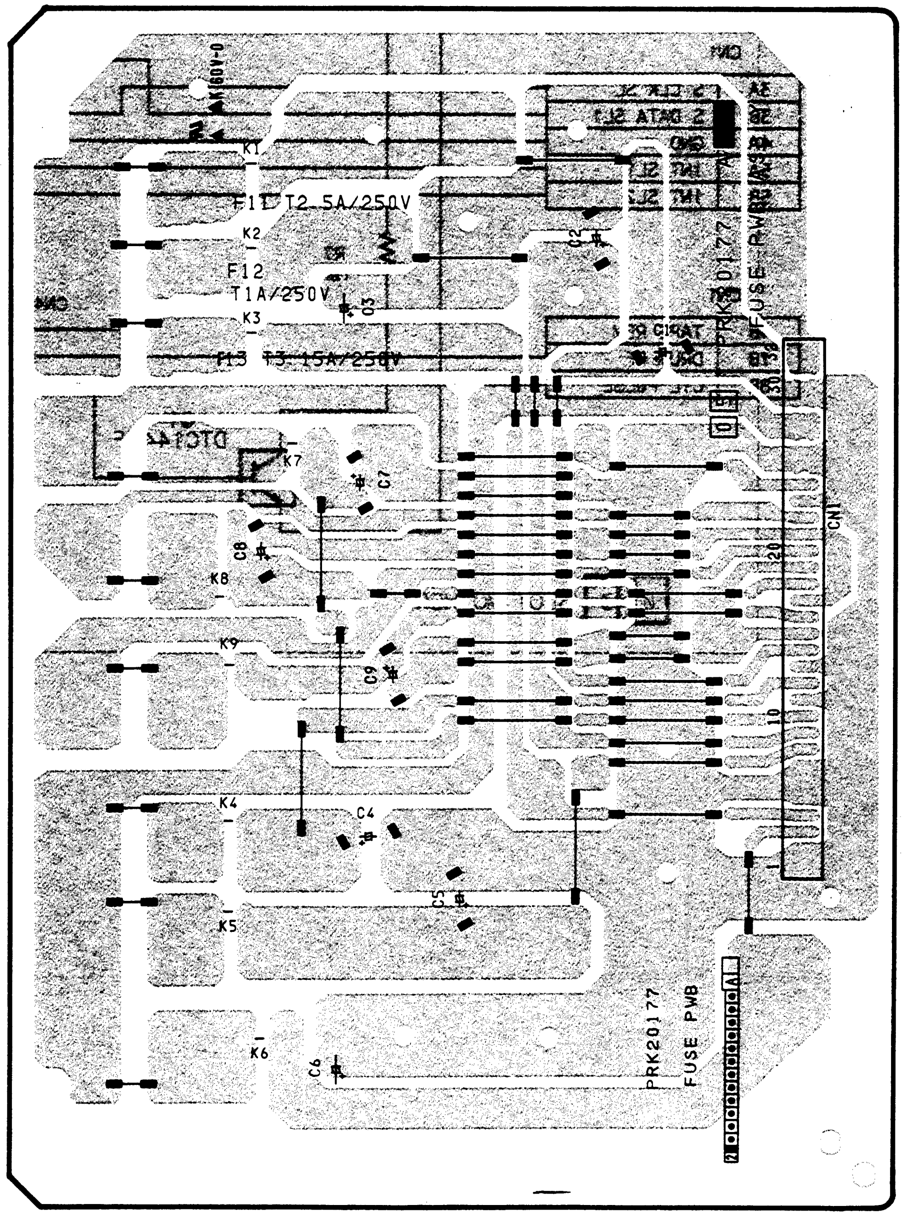
F11 T2.5A/250V
F12 T1A/250V
F13 T3.15A/250V
K1
K2
K3
K4
K5
K6
K7
K8
K9
C4
C5
C6
C7
C8
C9
CN1
PRK20177 FUSE PWB

4.26 DECK TERMINAL SCHEMATIC DIAGRAM

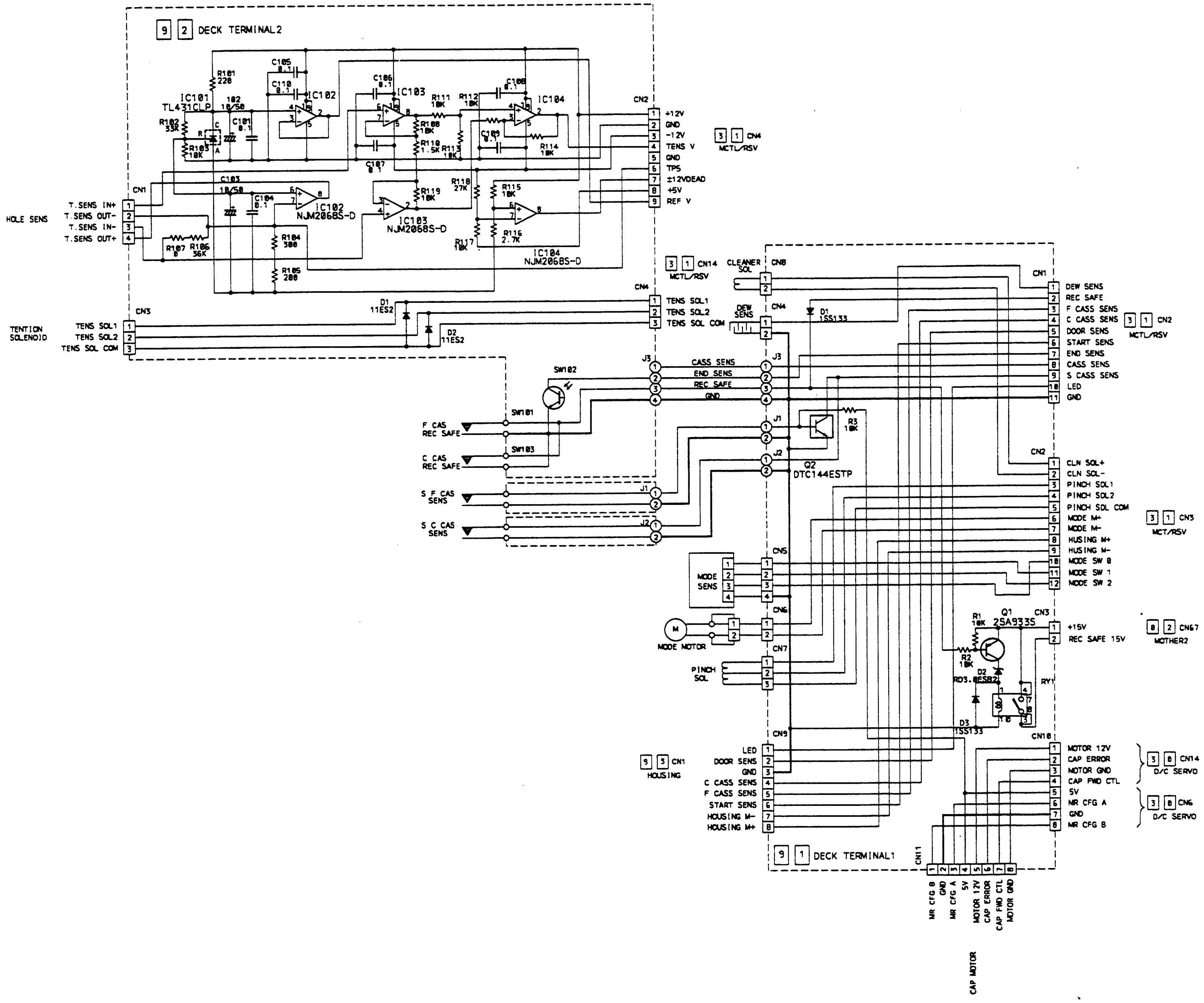
9 2 DECK TERMINAL2
IC101 TL431CLP
IC102 NJM2068S-D
IC103 NJM2068S-D
IC104 NJM2068S-D
CN2
+12V
GND
-12V
TENS V
GND
TPS
±12VDEAD
+5V
REF V
3 1 CN4 MCTL/RSV
HOLE SENS
T.SENS IN+
T.SENS OUT-
T.SENS IN-
T.SENS OUT+
CN1
CN3
TENTION SOLENOID
TENS SOL1
TENS SOL2
TENS SOL COM
D1 11ES2
D2 11ES2
CN4
3 1 CN14 MCTL/RSV
CLEANER SOL
CN8
DEW SENS
D1 1SS133
DEW SENS
REC SAFE
F CASS SENS
C CASS SENS
DOOR SENS
START SENS
END SENS
CASS SENS
S CASS SENS
LED
GND
3 1 CN2 MCTL/RSV
J3
SW102
SW101
SW103
F CAS REC SAFE
C CAS REC SAFE
S F CAS SENS
S C CAS SENS
J1
J2
Q2 DTC144ESTP
R3 10K
CLN SOL+
CLN SOL-
PINCH SOL1
PINCH SOL2
PINCH SOL COM
MODE M+
MODE M-
HUSING M+
HUSING M-
MODE SW 0
MODE SW 1
MODE SW 2
3 1 CN5 MCTL/RSV
MODE SENS
CN5
CN6
MODE MOTOR
CN7
PINCH SOL
R1 10K
Q1 2SA933S
+15V
REC SAFE 15V
8 2 CN67 MOTHER2
R2 10K
D2 RD5.6ESB2
RY1
D3 1SS133
CN9
9 5 CN1 HOUSING
LED
DOOR SENS
GND
C CASS SENS
F CASS SENS
START SENS
HOUSING M-
HOUSING M+
CN10
MOTOR 12V
CAP ERROR
MOTOR GND
CAP FWD CTL
5V
MR CFG A
GND
MR CFG B
3 8 CN14 D/C SERVO
3 8 CN6 D/C SERVO
9 1 DECK TERMINAL1
CN11
CAP MOTOR

4.27 DECK TERMINAL & CASSETTE HOUSING CIRCUIT BOARDS

— DECK TERMINAL —

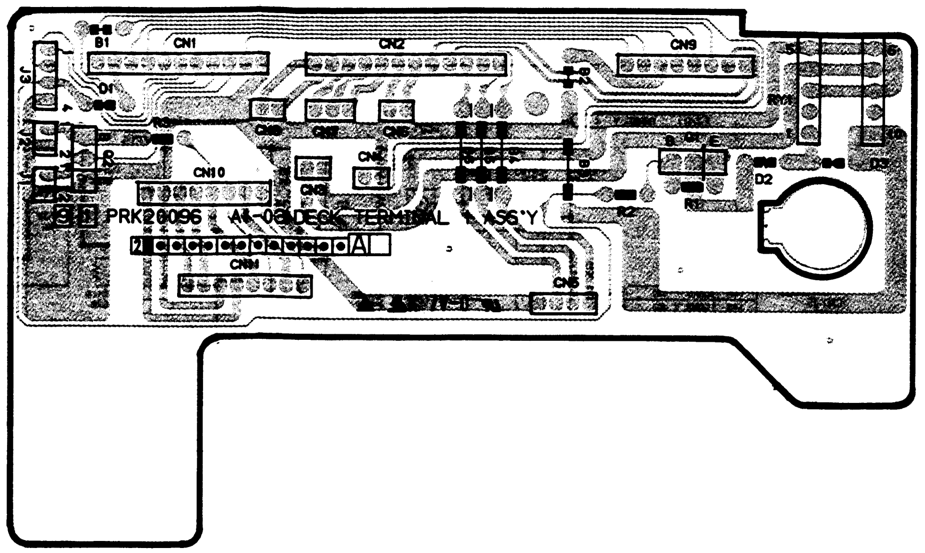
CN1
CN2
CN9
CN10
CN8
CN4
CN5
CN3
B1
D1
D2
J3
9 1 PRK20096 A1-03 DECK TERMINAL ASS'Y

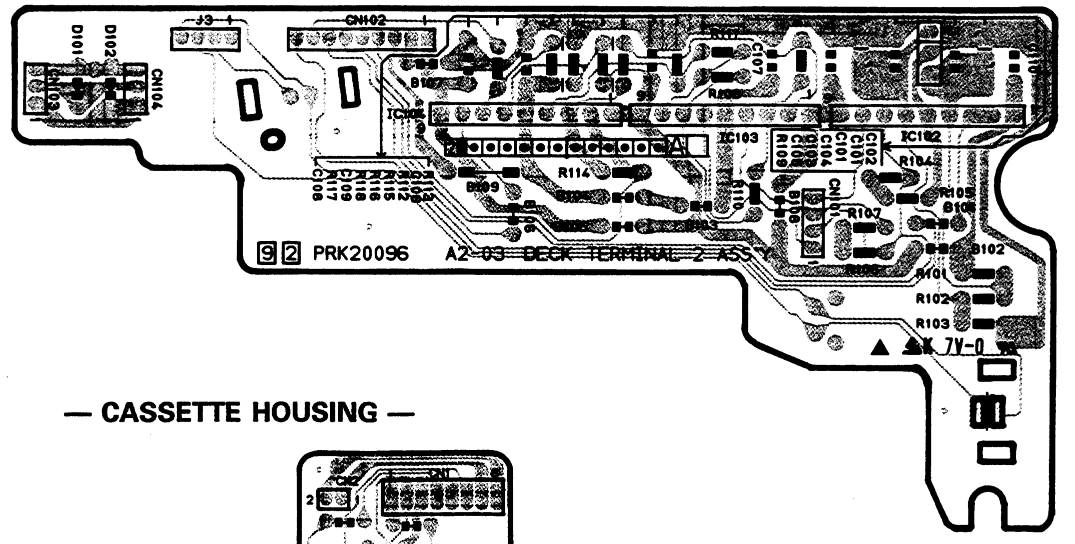
J3
CN102
D101
D102
CN104
IC102
IC103
R114
R101
R102
R103
R104
R105
R107
B102
9 2 PRK20096 A2-03 DECK TERMINAL 2 ASS'Y
▲ ⚠K 7V-0

— CASSETTE HOUSING —

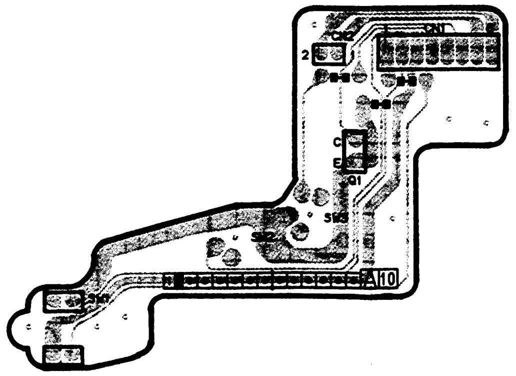

— MODE MOTOR —

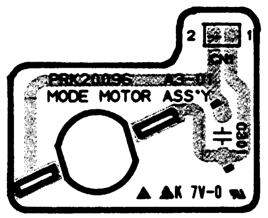
2 1
PRK20096 A3-03 MODE MOTOR ASS'Y
▲ ⚠K 7V-0

— S. F. CASSETTE SENSOR —

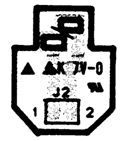

— S. C. CASSETTE SENSOR —

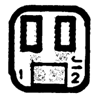

4.28 REC/PB Y SCHEMATIC DIAGRAM

— DIAGRAM (1/2) —

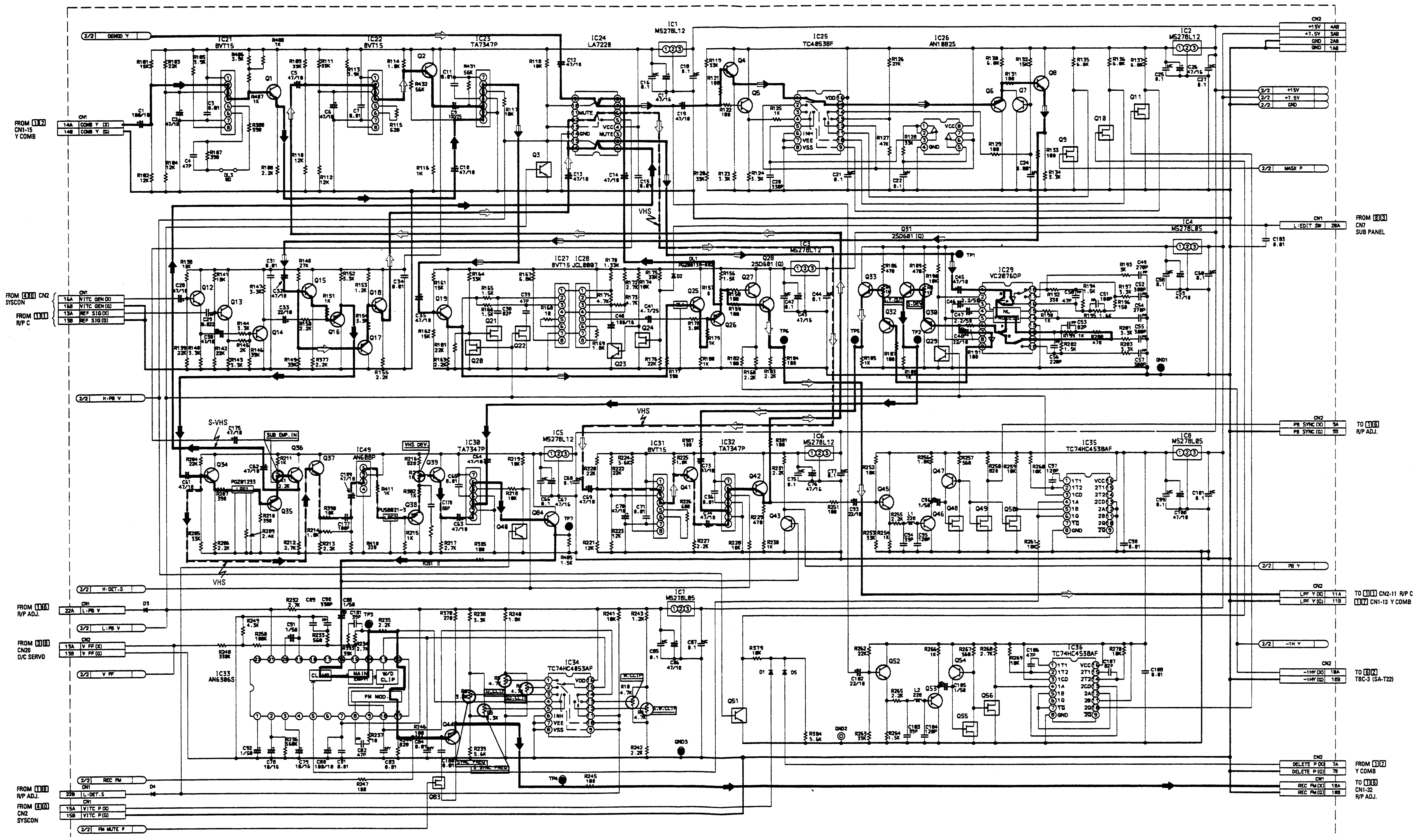

DEMOD Y
FROM 1 7 CN1-15 Y COMB
COMB Y (X)
COMB Y (G)
IC21 8VT15
IC22 8VT15
IC23 TA7347P
IC24 LA7228
IC1 M5278L12
IC25 TC4053BF
IC26 AN1882S
IC2 M5278L12
+15V
+7.5V
GND
MASK P
FROM 8 3 CN7 SUB PANEL
L:EDIT SW
IC4 M5278L05
Q31 2SD601 (Q)
IC3 M5278L12
Q28 2SD601 (Q)
IC29 VC2076DP
IC27 IC28 8VT15 JCL0007
FROM 4 0 CN2 SYSCON
FROM 1 1 R/P C
VITC GEN (X)
VITC GEN (G)
REF SIG (X)
REF SIG (G)
H:PB V
VHS
S-VHS
SUB EMP. IN
IC49 AN688P
VHS DEV.
IC30 TA7347P
IC5 M5278L12
IC31 8VT15
IC32 TA7347P
IC6 M5278L12
IC35 TC74HC4538AF
IC8 M5278L05
PB SYNC (X)
PB SYNC (G)
TO 1 6 R/P ADJ.
PB Y
H:DET.S
FROM 1 6 R/P ADJ.
L:PB V
IC7 M5278L05
FROM 3 0 CN20 D/C SERVO
V FF (X)
V FF (G)
V FF
IC33 AN6386S
CLAMP
MAIN EMPH
W/D CLIP
FM MOD.
IC34 TC74HC4053AF
W.CLIP
S.W.CLIP
IC36 TC74HC4538AF
LPF Y (X)
LPF Y (G)
TO 1 1 CN2-11 R/P C
1 7 CN1-13 Y COMB
-1H Y
-1H Y (X)
-1H Y (G)
TO 3 2 TBC-3 (SA-T22)
REC FM
FROM 1 6 R/P ADJ.
L:DET.S
FROM 4 0 CN2 SYSCON
VITC P (X)
VITC P (G)
FM MUTE P
DELETE P (X)
DELETE P (G)
FROM 1 7 Y COMB
TO 1 6 CN1-32 R/P ADJ.
REC FM (X)
REC FM (G)
TP1
TP2
TP3
TP4
TP5
TP6
TP7
GND1
GND2
GND3
6
5
4
3
2
1
A
B
C
D
E
F
G
H

— DIAGRAM (2/2) —

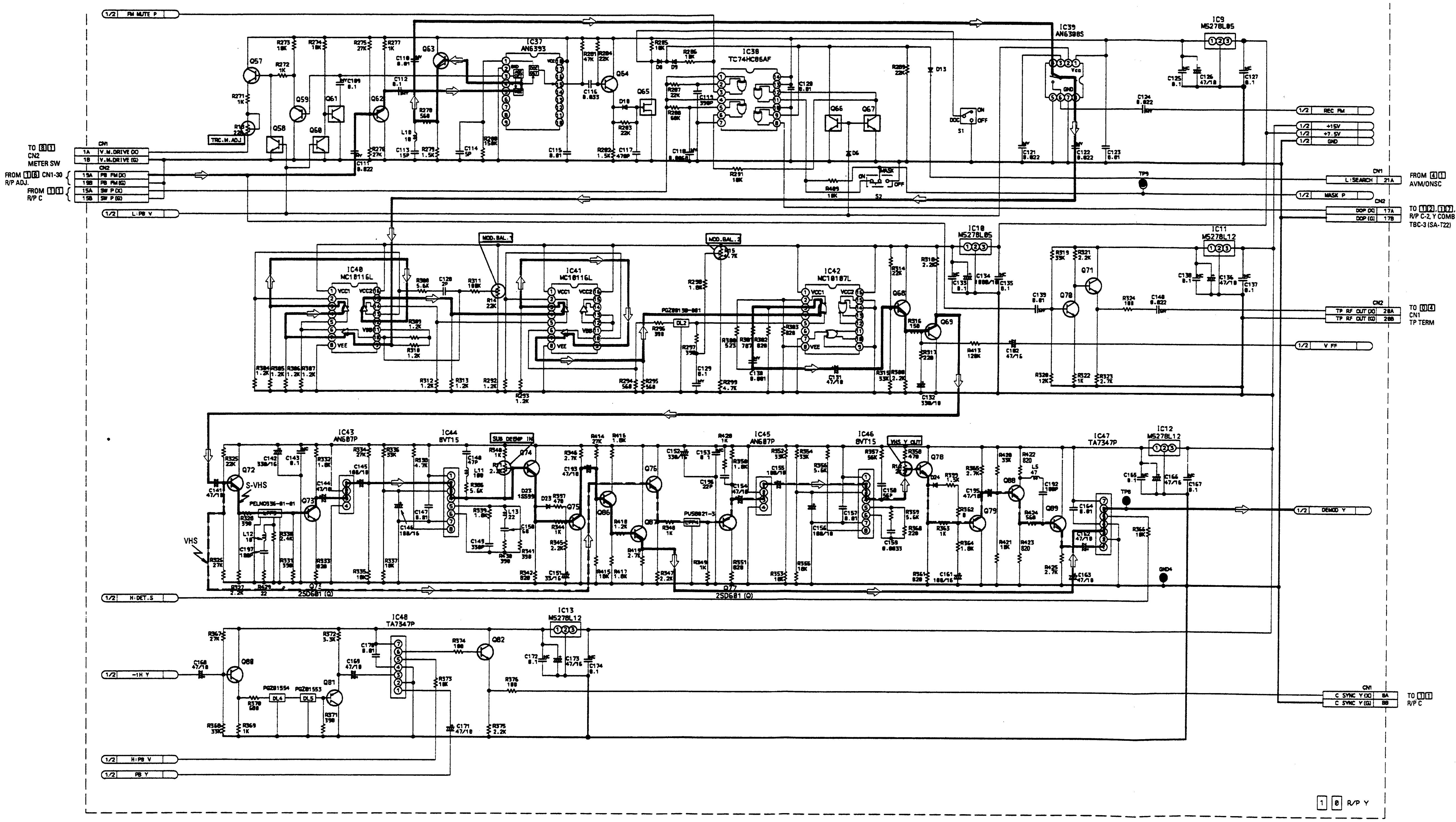
IC37 AN6393
IC38 TC74HC86AF
IC39 AN6308S
IC9 M5278L05
IC40 MC10116L
IC41 MC10116L
IC42 MC10107L
IC10 M5278L05
IC11 M5278L12
IC43 AN687P
IC44 8VT15
IC45 AN687P
IC46 8VT15
IC47 TA7347P
IC12 M5278L12
IC48 TA7347P
IC13 M5278L12
MOD.BAL.1
MOD.BAL.2
SUB DEEMP IN
VHS Y OUT
TRC.M.ADJ
S-VHS
VHS
TO 8 1 CN2 METER SW
FROM 1 6 CN1-30 R/P ADJ.
FROM 1 1 R/P C
V.M.DRIVE (Q)
V.M.DRIVE (Q)
PB FM (Q)
PB FM (Q)
SW P (Q)
SW P (Q)
1/2 FM MUTE P
1/2 L:PB V
1/2 H:DET.S
1/2 -1H Y
1/2 H:PB V
1/2 PB Y
1/2 REC FM
1/2 +15V
1/2 +7.5V
1/2 GND
L:SEARCH 21A
FROM 4 1 AVM/ONSC
1/2 MASK P
DOP (Q) 17A
DOP (Q) 17B
TO 1 2, 1 7, 6 2 R/P C-2, Y COMB TBC-3 (SA-T22)
TP RF OUT (Q) 20A
TP RF OUT (Q) 20B
TO 0 4 CN1 TP TERM
1/2 V FF
1/2 DEMOD Y
C SYNC Y (Q) 8A
C SYNC Y (Q) 8B
TO 1 1 R/P C
1 0 R/P Y
TP8
TP9
GND4
2SD601 (Q)
S1
S2
DOC
ON
OFF
MASK

- DC voltage (1/2) - (R/P Y)

SYMBOL No.		REC	PB	SYMBOL No.		REC	PB	SYMBOL No.		REC	PB	SYMBOL No.		REC	PB	SYMBOL No.		REC	PB	SYMBOL No.		REC	PB
INTEGRATED CIRCUIT				IC23	5	0.0	6.4	IC29	1	2.0	2.0	IC33	20	1.4	1.4	IC37	11	0.0	0.0	IC41	14	4.1	4.1
IC1	1	11.7	11.7		6	7.3	7.3		2	0.0	5.0		21	3.8	0.8		12	0.0	0.1		15	4.1	4.1
	2	0.0	0.0		7	11.7	11.7		3	3.4	3.5		22	2.8	2.8		13	0.0	0.1		16	5.0	5.0
	3	14.7	14.7	IC24	1	7.7	7.7		4	3.5	3.5	IC34	1	2.5	2.5		14	3.2	3.2	IC42	1	5.0	5.0
IC2	1	11.8	11.8		2	7.0	7.0		5	5.1	5.1		2	1.9	1.9		15	4.9	5.0		2	3.7	3.7
	2	0.0	0.0		3	0.1	0.1		6	2.2	2.2		3	2.1	2.1		16	2.2	2.2		3	3.9	3.9
	3	14.7	14.7		4	11.7	11.7		7	2.0	2.0		4	2.1	2.1		17	3.2	3.2		4	4.1	4.1
IC3	1	12.0	12.0		5	7.7	7.7		8	5.1	5.1		5	2.1	2.1		18	5.1	5.1		5	3.8	3.8
	2	0.0	0.0		6	7.0	7.0		9	1.4	1.4		6	0.0	0.0	IC38	1	2.5	2.9		6	0.0	0.0
	3	14.7	14.7		7	7.0	7.0		10	3.0	2.9		7	0.0	0.0		2	2.4	2.8		7	0.0	0.0
IC4	1	5.1	5.0		8	7.7	7.8		11	3.0	2.9		8	0.0	0.0		3	0.0	0.0		8	0.0	0.0
	2	0.0	0.0		9	7.8	7.7		12	2.9	2.9		9	0.7	0.7		4	2.4	2.8		9	0.0	0.0
	3	7.9	7.9		10	0.0	7.6		13	0.0	0.0		10	0.7	0.7		5	2.4	2.8		10	3.6	3.6
IC5	1	11.8	11.8		11	0.1	0.0		14	2.9	2.9		11	0.7	0.0		6	0.1	0.1		11	4.5	4.5
	2	0.0	0.0		12	7.7	7.7		15	2.9	2.9		12	3.5	3.5		7	0.0	0.0		12	4.5	4.5
	3	14.7	14.7		13	0.0	7.6		16	2.0	2.0		13	2.5	2.5		8	0.0	0.0		13	3.6	3.6
IC6	1	11.7	11.7		14	0.0	0.0		17	2.0	2.0		14	3.5	3.5		9	0.0	0.0		14	0.0	0.0
	2	0.0	0.0		15	0.0	7.6		18	2.0	2.0		15	1.9	1.9		10	0.0	0.0		15	0.0	0.0
	3	14.7	14.7		16	7.7	7.7	IC30	1	8.3	8.3		16	5.1	5.1		11	0.0	0.1		16	5.0	5.0
IC7	1	5.1	5.1	IC25	1	5.1	5.1		2	0.0	0.0	IC35	1	0.0	0.0		12	0.0	0.1	IC43	1	6.3	6.3
	2	0.0	0.0		2	4.8	0.0		3	8.3	8.3		2	4.7	4.7		13	0.0	0.0		2	11.8	11.8
	3	7.9	7.9		3	5.1	5.1		4	0.0	0.0		3	5.1	5.1		14	5.1	5.1		3	2.7	2.7
IC8	1	5.1	5.1		4	5.1	5.1		5	6.7	6.6		4	0.1	0.1	IC39	1	5.1	5.1		4	0.0	0.0
	2	0.0	0.0		5	4.7	4.7		6	7.5	7.5		5	4.4	4.4		2	3.8	0.8	IC44	1	11.8	11.8
	3	7.9	7.9		6	0.0	0.0		7	11.8	11.8		6	0.1	0.1		3	2.6	2.6		2	4.0	4.0
IC9	1	5.1	5.1		7	0.0	0.0	IC31	1	11.7	11.7		7	4.9	4.9		4	2.6	2.6		3	4.1	4.1
	2	0.0	0.0		8	0.0	0.0		2	4.1	4.1		8	0.0	0.0		5	0.0	0.0		4	6.9	6.9
	3	7.9	7.9		9	11.2	11.2		3	4.1	4.1		9	5.1	5.1		6	2.6	2.6		5	3.3	3.3
IC10	1	5.0	5.0		10	11.8	11.8		4	8.4	8.4		10	0.0	0.0		7	0.0	0.0		6	3.3	3.3
	2	0.0	0.0		11	11.8	11.6		5	3.4	3.4		11	0.0	0.0		8	2.9	2.7		7	0.0	0.0
	3	7.9	7.9		12	4.8	4.8		6	3.4	3.4		12	0.0	0.0	IC40	1	5.0	5.0		8	1.2	1.2
IC11	1	11.9	11.9		13	9.8	9.8		7	0.0	0.0		13	0.0	0.0		2	4.2	4.1	IC45	1	6.6	6.6
	2	0.0	0.0		14	9.8	9.7		8	1.1	1.1		14	5.1	5.1		3	4.1	4.2		2	11.8	11.8
	3	14.7	14.7		15	5.1	5.1	IC32	1	8.2	8.2		15	0.0	0.0		4	4.1	4.0		3	2.7	2.7
IC12	1	11.8	11.8		16	11.8	11.8		2	0.0	0.0		16	5.1	5.1		5	4.1	4.0		4	0.0	0.0
	2	0.0	0.0	IC26	1	4.8	4.8		3	8.2	8.2	IC36	1	0.0	0.0		6	4.1	4.0	IC46	1	11.8	11.8
	3	14.7	14.7		2	4.8	4.8		4	0.0	0.0		2	4.7	4.7		7	4.1	4.0		2	4.0	4.0
IC13	1	11.8	11.9		3	4.7	4.7		5	6.5	6.5		3	5.1	5.1		8	0.0	0.0		3	4.0	4.0
	2	0.0	0.0		4	0.0	0.0		6	7.4	7.4		4	4.6	4.7		9	3.8	3.8		4	7.1	7.1
	3	14.7	14.7		5	4.8	4.7		7	11.7	11.7		5	5.0	5.0		10	3.8	3.8		5	3.3	3.3
IC21	1	11.7	11.7		6	4.8	4.8	IC33	1	3.3	3.3		6	0.1	0.1		11	3.8	3.8		6	3.3	3.3
	2	4.0	4.0		7	4.8	4.8		2	0.7	0.0		7	5.0	5.0		12	4.1	4.2		7	0.0	0.0
	3	4.1	4.1		8	11.8	11.8		3	3.4	3.4		8	0.0	0.0		13	4.2	4.1		8	1.1	1.1
	4	6.8	6.8	IC27	1	9.7	9.7		4	0.2	0.0		9	5.0	5.0		14	4.1	4.2	IC47	1	8.3	8.3
	5	3.3	3.3		2	5.2	5.2		5	0.5	0.5		10	0.1	0.1		15	4.2	4.2		2	0.0	0.0
	6	3.3	3.3		3	5.2	5.2		6	0.2	0.0		11	5.1	5.1		16	5.0	5.0		3	8.2	8.3
	7	0.0	0.0		4	8.0	8.1		7	5.1	5.1		12	5.0	5.0	IC41	1	5.0	5.0		4	0.0	0.0
	8	1.3	1.3		5	4.5	4.5		8	4.1	4.3		13	4.7	4.7		2	4.2	4.2		5	6.6	6.6
IC22	1	11.7	11.7		6	4.5	4.5		9	4.1	4.3		14	4.7	4.7		3	4.1	4.2		6	7.4	7.4
	2	3.0	3.0		7	0.0	0.0		10	3.5	3.5		15	0.0	0.0		4	4.2	4.2		7	11.8	11.8
	3	3.0	3.0		8	1.1	1.1		11	3.0	3.4		16	5.1	5.1		5	4.1	4.2	IC48	1	8.3	8.3
	4	7.0	7.0	IC28	1	9.7	9.7		12	2.1	2.1	IC37	1	2.8	2.8		6	4.0	4.1		2	0.0	0.0
	5	2.2	2.3		2	12.0	12.0		13	1.9	1.9		2	0.0	0.0		7	4.1	4.1		3	8.3	8.3
	6	2.3	2.3		3	8.8	8.8		14	2.3	2.0		3	0.6	0.9		8	0.0	0.0		4	0.0	0.0
	7	0.0	0.0		4	8.0	8.2		15	2.2	1.9		4	3.9	3.9		9	4.1	4.2		5	0.0	6.4
	8	1.3	1.3		5	8.1	8.1		16	1.6	1.6		5	3.8	3.8		10	4.2	4.2		6	7.5	7.5
IC23	1	8.1	8.2		6	6.5	6.5		17	2.5	2.5		6	0.0	0.1		11	3.8	3.8		7	11.8	11.9
	2	0.0	0.0		7	0.0	0.0		18	1.5	0.9		7	0.0	0.0		12	3.8	3.8	IC49	1	6.8	6.8
	3	8.2	8.2		8	5.5	5.5		19	0.4	0.0		8	0.0	0.1		13	3.8	3.8		2	11.8	11.8
	4	0.0	0.0										9	0.0	0.1						3	2.7	2.7
													10	0.0	0.1						4	0.0	0.0

- DC voltage (2/2) - (R/P Y)

SYMBOL No.		REC	PB	SYMBOL No.		REC	PB	SYMBOL No.		REC	PB	SYMBOL No.		REC	PB	SYMBOL No.		REC	PB	SYMBOL No.		REC	PB
TRANSISTOR				Q21	G	0.0	4.4	Q41	B	8.4	8.4	Q61	B	0.0	4.3	Q81	B	1.5	1.5	**CONNECTOR**			
Q1	B	6.8	6.8		D	0.1	0.0		C	11.7	11.7		C	0.0	0.0		C	0.0	0.0	CN1	1A	0.2	0.1
	C	11.7	11.7		S	0.0	0.0		E	7.7	7.7		E	0.0	0.0		E	2.2	2.2		1 B	0.0	0.0
	E	6.2	6.2	Q22	G	3.8	0.8	Q42	B	7.4	7.4	Q62	B	2.7	2.7	Q82	B	7.5	7.5		8A	6.8	6.8
Q2	B	7.0	7.0		D	0.0	0.4		C	11.7	11.7		C	0.0	0.0		C	11.8	11.8		8 B	0.0	0.0
	C	11.7	11.7		S	0.0	0.0		E	6.7	6.7		E	3.3	3.3		E	6.8	6.8		13A	2.1	2.1
	E	6.4	6.4	Q23	B	9.9	9.9	Q43	B	6.8	6.8	Q63	B	3.9	3.9	Q83	G	0.0	0.0		13 B	0.0	0.0
Q3	B	3.8	0.8		C	0.0	0.0		C	0.0	0.0		C	5.1	5.1		D	0.0	0.0		14A	6.5	6.5
	C	0.0	7.6		E	0.0	0.0		E	7.5	7.5		E	3.3	3.3		S	0.0	0.0		14 B	0.0	0.0
	E	0.0	0.0	Q24	G	0.5	0.5	Q44	B	3.0	3.4	Q64	B	4.8	4.8	Q84	B	7.5	7.5		15A	0.0	0.0
Q4	B	5.7	5.7		D	9.9	9.9		C	0.0	0.0		C	5.1	5.1		C	11.8	11.8		15 B	0.0	0.0
	C	11.8	11.8		S	0.0	0.0		E	3.5	4.0		E	4.2	4.2		E	6.8	6.8		16A	0.0	0.0
	E	5.1	5.1	Q25	B	5.3	5.2	Q45	B	3.8	3.8	Q65	G	3.6	3.7	Q86	B	4.6	4.6		16 B	0.0	0.0
Q5	B	5.7	5.7		C	12.0	12.0		C	5.1	5.1		D	0.0	0.0		C	7.8	7.8		18A	3.6	4.0
	C	11.8	11.8		E	4.6	4.6		E	3.1	3.1		S	0.0	0.0		E	4.0	4.0		18 B	0.0	0.0
	E	5.1	5.1	Q26	B	4.7	4.7	Q46	B	3.1	3.1	Q66	B	3.3	0.4	Q87	B	4.0	4.0		20A	0.0	0.0
Q6	B	5.1	5.1		C	0.0	0.0		C	0.0	0.0		C	0.0	0.0		C	11.8	11.8		21A	6.0	6.0
	C	0.0	0.0		E	5.3	5.3		E	3.7	3.7		E	0.0	0.0		E	3.4	3.4		22A	5.0	0.2
	E	5.7	5.7	Q27	B	5.3	5.3	Q47	B	0.9	0.8	Q67	B	3.3	0.4	Q88	B	4.1	4.1		22 B	0.2	0.2
Q7	B	9.8	9.7		C	12.0	12.0		C	5.1	5.1		C	0.0	0.1		C	8.3	8.3	CN2	1AB	0.0	0.0
	C	0.0	0.0		E	4.7	4.7		E	3.2	3.2		E	0.0	0.0		E	3.5	3.5		2AB	0.0	0.0
	E	5.7	5.7	Q28	B	5.3	5.3	Q48	G	3.2	3.2	Q68	B	2.9	2.9	Q89	B	3.5	3.5		3AB	7.9	7.9
Q8	B	5.7	5.7		C	12.0	12.0		D	0.9	0.8		C	5.0	5.0		C	11.8	11.8		4AB	14.7	14.7
	C	11.8	11.8		E	4.7	4.7		S	0.0	0.0		E	2.3	2.3		E	2.9	2.9		7A	0.0	0.0
	E	5.1	5.1	Q29	B	3.8	0.8	Q49	G	0.9	0.8	Q69	B	2.3	2.3						7 B	0.0	0.0
Q9	G	0.0	0.1		C	0.0	5.0		D	4.6	4.7		C	0.0	0.0						9A	4.7	4.7
	D	11.8	11.6		E	0.0	0.0		S	0.0	0.0		E	3.0	3.0						9 B	0.0	0.0
	S	0.0	0.0	Q30	B	2.3	2.2	Q50	G	0.9	0.8	Q70	B	3.1	3.1						10A	4.7	4.7
Q10	G	0.0	0.0		C	0.0	0.0		D	4.4	4.4		C	6.5	6.5						10 B	0.0	0.0
	D	11.8	11.8		E	2.9	2.9		S	0.0	0.0		E	2.4	2.5						11A	4.5	4.5
	S	0.0	0.0	Q31	B	3.2	3.2	Q51	B	0.0	7.6	Q71	B	6.5	6.5						11 B	0.0	0.0
Q11	G	0.1	0.1		C	5.1	5.1		C	0.0	0.0		C	11.9	11.9						13A	P	P
	D	11.2	11.2		E	2.6	2.6		E	0.0	0.0		E	5.9	5.9						13 B	0.0	0.0
	S	0.0	0.0	Q32	B	1.4	1.4	Q52	B	3.0	3.0	Q72	B	5.8	5.8						15A	2.1	2.8
Q12	B	6.3	6.3		C	0.0	0.0		C	5.1	5.1		C	11.8	11.8						15 B	0.0	0.0
	C	11.7	11.7		E	2.0	2.0		E	2.3	2.3		E	5.1	5.1						17A	0.0	0.0
	E	5.7	5.7	Q33	B	2.3	2.3	Q53	B	2.4	2.4	Q73	B	2.3	2.3						17 B	0.0	0.0
Q13	B	6.3	6.3		C	5.1	5.1		C	0.0	0.0		C	8.2	8.2						19A	8.3	8.3
	C	11.7	11.7		E	1.6	1.6		E	3.0	3.0		E	1.7	1.7						19 B	0.0	0.0
	E	5.7	5.7	Q34	B	6.4	6.4	Q54	B	0.6	0.6	Q74	B	6.9	6.9						20A	0.0	0.0
Q14	B	5.4	5.4		C	11.8	11.8		C	5.1	5.1		C	11.8	11.8						20 B	0.0	0.0
	C	0.0	0.0		E	5.7	5.7		E	3.5	3.5		E	6.3	6.3								
	E	6.1	6.1	Q35	B	2.6	2.6	Q55	G	3.5	3.5	Q75	B	6.3	6.3								
Q15	B	6.3	6.3		C	0.0	0.0		D	0.6	0.6		C	0.0	0.0								
	C	11.7	11.7		E	3.2	3.2		S	0.0	0.0		E	6.9	6.9								
	E	5.7	5.7	Q36	B	4.5	4.5	Q56	G	0.6	0.6	Q76	B	5.8	5.8								
Q16	B	5.7	5.7		C	11.8	11.8		D	4.6	4.6		C	11.8	11.8								
	C	0.0	0.0		E	3.9	3.9		S	0.0	0.0		E	5.1	5.1								
	E	6.3	6.3	Q37	B	6.4	6.4	Q57	B	0.0	1.5	Q77	B	2.5	2.5								
Q17	B	6.3	6.3		C	11.8	11.8		C	5.1	5.1		C	7.7	7.7								
	C	0.0	0.0		E	5.7	5.8		E	0.2	0.9		E	1.9	1.9								
	E	6.9	6.9	Q38	B	3.4	3.4	Q58	B	3.8	0.8	Q78	B	8.1	8.1								
Q18	B	10.4	10.4		C	0.0	0.0		C	0.0	1.5		C	11.8	11.8								
	C	11.7	11.7		E	4.0	4.0		E	0.0	0.0		E	7.5	7.5								
	E	9.7	9.7	Q39	B	8.9	8.9	Q59	B	0.6	0.9	Q79	B	7.4	7.4								
Q19	B	5.9	5.9		C	11.8	11.8		C	0.0	0.0		C	0.0	0.0								
	C	12.0	12.0		E	8.3	8.3		E	0.5	1.5		E	8.1	8.1								
	E	5.3	5.3	Q40	B	0.7	0.7	Q60	B	3.8	0.8	Q80	B	6.1	6.1								
Q20	G	3.8	0.8		C	7.9	7.9		C	0.0	4.3		C	11.8	11.8								
	D	0.0	4.4		E	0.0	0.0		E	0.0	0.0		E	5.5	5.5								
	S	0.0	0.0																				

4.29 REC/PB Y CIRCUIT BOARD

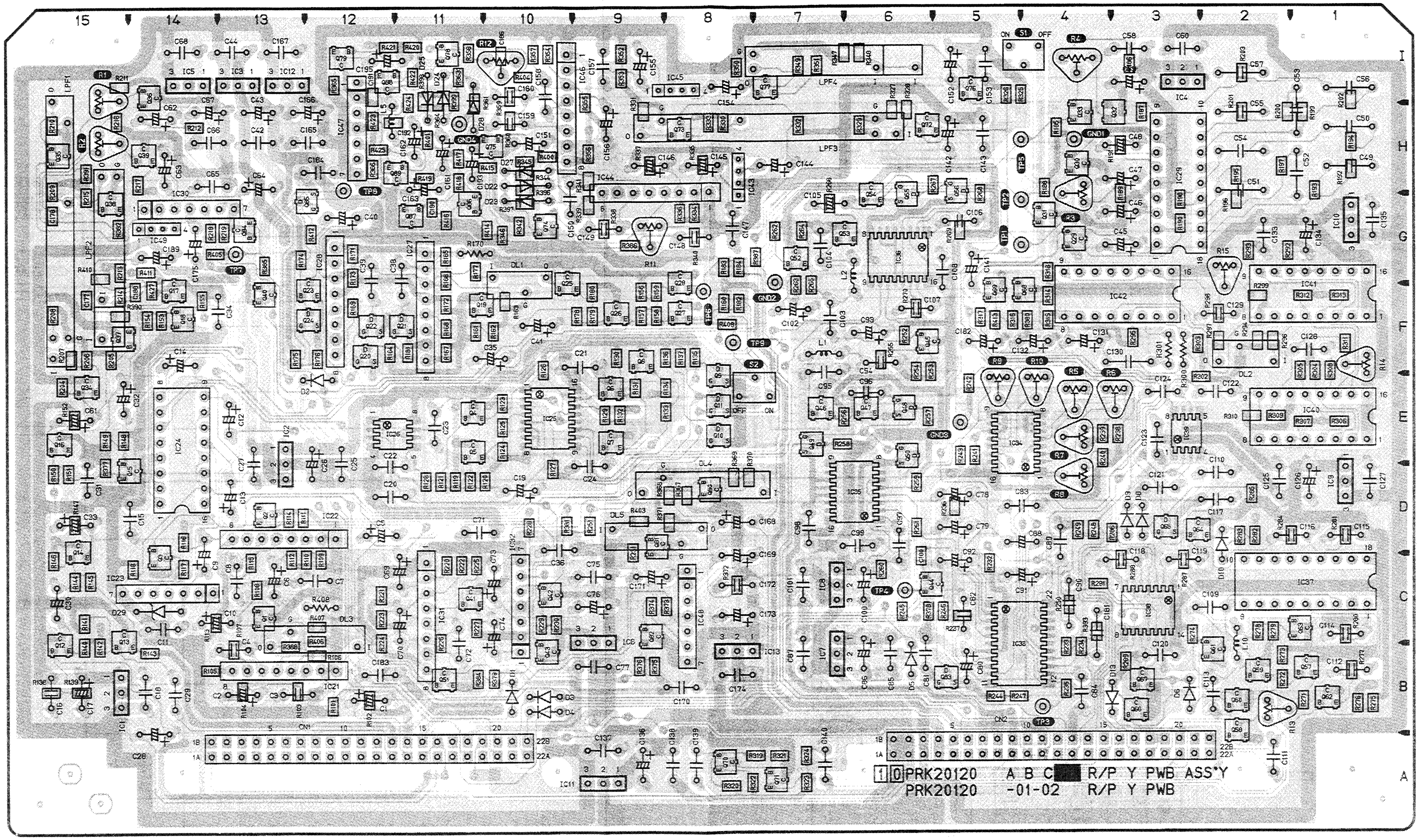
15
14
13
12
11
10
9
8
7
6
5
4
3
2
1
I
H
G
F
E
D
C
B
A
LPF1
LPF2
LPF3
LPF4
IC5
IC3
IC12
IC45
IC4
IC47
IC46
IC44
IC43
IC30
IC49
IC28
IC27
IC29
IC10
IC42
IC41
IC36
IC40
IC24
IC26
IC25
IC34
IC35
IC9
IC22
IC23
IC31
IC32
IC48
IC6
IC13
IC8
IC7
IC38
IC39
IC37
IC21
IC1
IC11
DL1
DL2
DL3
DL4
DL5
S1
ON
OFF
S2
TP1
TP2
TP3
TP4
TP5
TP6
TP7
TP8
TP9
GND1
GND2
GND3
CN1
CN2
1B
1A
22B
22A
PRK20120 A B C [redacted] R/P Y PWB ASS'Y
PRK20120 -01-02 R/P Y PWB

— MAIN WAVEFORMS OF REC/PB Y CIRCUIT —

TP1		TP2	TP3	TP4	TP5	TP6		TP7		TP8	
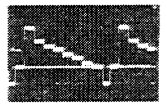	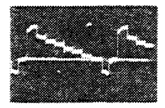	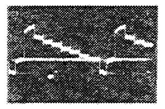	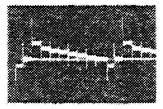	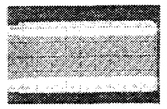	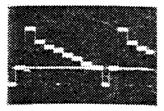	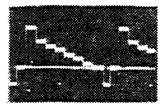	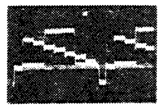	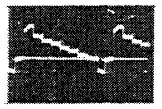	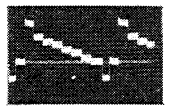	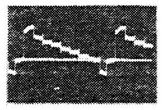	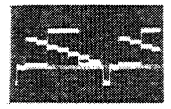
[REC] 400 mVp-p	[PB] 400 mVp-p	[REC] 320 mVp-p	[REC] S-VHS: 860 mVp-p VHS: 470 mVp-p	[REC] S-VHS: 1.0 Vp-p VHS: 890 mVp-p	[PB] 1.8 Vp-p	[S-VHS PB] 1.8 Vp-p	[VHS PB] 1.8 Vp-p	[S-VHS REC] 310 mVp-p	[VHS REC] 200 mVp-p	[S-VHS PB] 1.5 Vp-p	[VHS PB] 1.7 Vp-p

6

5

4

3

2

1

4.30 REC/PB COLOR CIRCUIT BOARD

— REC/PB COLOR —

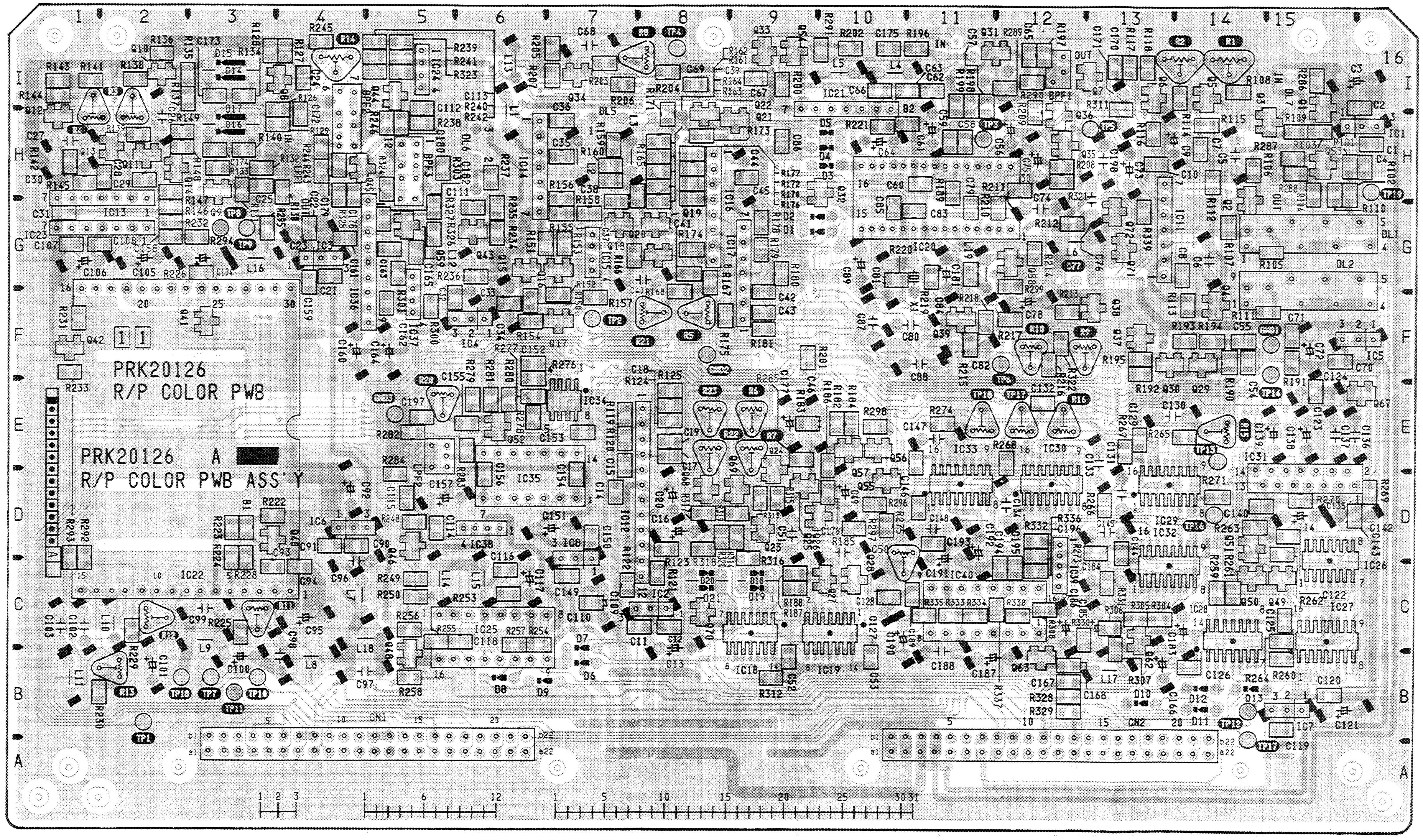
PRK20126
R/P COLOR PWB
PRK20126 A
R/P COLOR PWB ASS'Y
CN1
CN2

— BURST GATE —

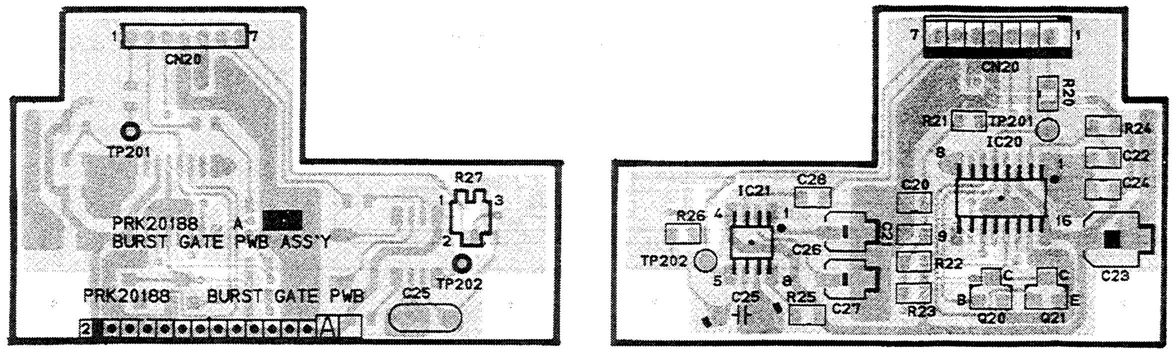
PRK20188 A
BURST GATE PWB ASS'Y
PRK20188 BURST GATE PWB
CN20
TP201
TP202
IC20
IC21

— BURST SWITCH —

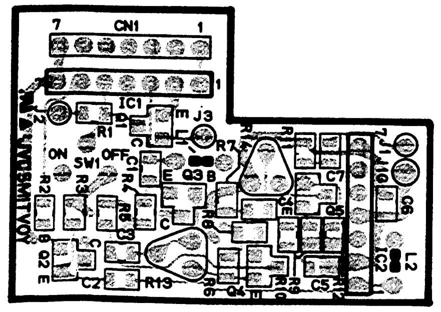
CN1
IC1
SW1
ON
OFF

A B C D E F G H

– DC voltage (1/2) – (R/P COLOR 1)

SYMBOL	No.	REC	PB
INTEGRATED CIRCUIT			
IC1	1	11.9	11.9
	2	0.0	0.0
	3	14.7	14.7
IC2	1	5.0	5.0
	2	0.0	0.0
	3	7.9	7.9
IC3	1	11.8	11.8
	2	0.0	0.0
	3	14.7	14.7
IC4	1	11.8	11.8
	2	0.0	0.0
	3	14.7	14.7
IC5	1	5.0	5.0
	2	0.0	0.0
	3	7.9	7.9
IC6	1	8.8	8.8
	2	0.0	0.0
	3	14.7	14.7
IC7	1	5.0	5.0
	2	0.0	0.0
	3	7.9	7.9
IC8	1	5.1	5.1
	2	0.0	0.0
	3	7.9	7.9
IC11	1	8.3	8.3
	2	0.0	0.0
	3	8.3	8.3
	4	0.0	0.0
	5	0.0	0.0
	6	7.5	7.5
	7	11.9	11.9
IC12	1	0.0	0.0
	2	0.0	0.0
	3	3.0	3.0
	4	3.7	3.4
	5	3.0	3.0
	6	5.0	5.0
	7	0.0	0.0
	8	3.2	3.0
	9	3.2	3.2
	10	3.3	3.4
	11	5.0	5.0
	12	1.9	1.9
IC13	1	8.3	8.3
	2	0.0	0.0
	3	8.3	8.3
	4	0.0	0.0
	5	0.0	0.0
	6	7.5	7.5
	7	11.8	11.8
IC14	1	8.2	8.2
	2	0.0	0.0
	3	8.2	8.2
	4	0.0	0.0
	5	4.1	4.1
	6	7.4	7.4
	7	11.8	11.8
IC15	1	6.7	6.7
	2	11.8	11.8
	3		
	4	2.7	2.7
		0.0	0.0
IC16	1	9.4	9.4
	2	4.5	4.5
	3	4.5	4.5
	4	9.6	9.6
	5	3.8	3.8
	6	3.8	3.8
	7	0.0	0.0
	8	1.2	1.2
IC17	1	8.2	8.2
	2	0.0	0.0
	3	8.2	8.2
	4	0.0	0.0
	5	2.2	2.2
	6	7.4	7.4
	7	11.8	11.8
IC18	1	2.6	2.2
	2	2.6	2.2
	3	2.5	2.7
	4	0.0	0.0
	5	0.0	0.0
	6	5.0	5.0
	7	0.0	0.0
	8	5.0	2.6
	9	2.7	2.6
	10	0.0	4.9
	11	5.0	2.4
	12	0.0	4.9
	13	2.2	2.7
	14	5.0	5.0
IC20	1	0.4	0.4
	2	3.8	3.8
	3	5.0	5.0
	4	2.0	2.0
	5	2.3	1.7
	6	5.0	5.0
	7	2.1	2.0
	8	2.5	2.5
	9	5.0	5.0
	10	3.2	3.1
	11	0.0	0.0
	12	4.4	4.4
	13	3.1	3.1
	14	2.7	2.7
	15	3.5	3.5
	16	2.5	4.3
	17	5.0	5.0
	18	2.5	2.5
	19	3.0	3.0
	20	2.5	2.7
	21	5.0	5.0
	22	2.7	1.7
	23	0.0	0.0
	24	1.7	2.7
	25	3.6	3.6
	26	2.4	2.4
	27	0.0	0.0
	28	2.7	2.7
	29	2.0	2.0
	30	2.8	2.9
		IC25 12	2.1
IC21	1	3.2	3.2
	2	0.0	0.0
	3	3.2	3.2
	4	0.0	0.0
	5	0.2	0.0
	6	2.6	3.0
	7	5.0	5.0
IC22	1	8.8	8.8
	2	0.0	0.0
	3	0.0	0.0
	4	0.0	0.0
	5	0.0	0.6
	6	0.0	0.0
	7	6.3	6.3
	8	6.0	6.0
	9	0.0	0.0
	10	2.1	2.1
	11	0.0	0.0
	12	2.1	2.1
	13	6.7	6.7
	14	6.7	6.7
	15	0.0	0.0
	16	2.1	2.1
	17	2.1	2.1
	18	8.3	8.3
	19	8.7	8.7
	20	3.6	3.6
	21	3.4	3.4
	22	8.7	8.7
	23	2.5	7.4
	24	8.8	8.8
	25	6.9	6.9
	26	3.4	3.4
	27	8.8	8.7
	28	0.0	0.0
	29	5.0	5.0
	30	8.8	8.7
IC23	1	8.3	8.3
	2	0.0	0.0
	3	8.3	8.3
	4	0.0	0.0
	5	0.1	0.1
	6	7.5	7.5
	7	11.8	11.8
IC24	1	3.0	3.0
	2	5.0	5.0
	3	1.7	1.7
	4	0.0	0.0
IC25	1	2.1	2.1
	2	2.1	2.1
	3	2.1	2.1
	4	2.1	2.1
	5	2.1	2.1
	6	0.0	0.0
	7	0.0	0.0
	8	0.0	0.0
	9	0.0	4.4
	10	0.0	0.0
	11	0.0	0.0
	12	IC29	5.0
	13	13	
		2.1	2.1
IC25	14	2.1	2.1
	15	2.1	2.1
	16	5.0	5.0
IC26	1	2.4	0.0
	2	2.6	2.2
	3	3.6	3.6
	4	0.0	0.0
	5	2.1	2.6
	6	0.0	0.0
	7	0.0	0.0
	8	0.0	0.0
	9	2.8	2.6
	10	0.0	0.0
	11	3.6	3.6
	12	2.4	2.5
	13	2.6	2.5
	14	5.0	5.0
IC27	1	2.3	2.5
	2	2.3	2.5
	3	2.5	2.6
	4	3.0	2.6
	5	3.0	2.6
	6	2.1	2.6
	7	0.0	0.0
	8	0.0	0.0
	9	5.0	0.0
	10	0.0	0.0
	11	1.1	1.1
	12	0.0	0.0
	13	0.0	0.0
	14	2.4	2.6
	15	2.4	2.5
	16	5.0	5.0
IC28	1	5.0	0.7
	2	0.0	5.0
	3	0.0	5.0
	4	5.0	0.0
	5	0.0	0.0
	6	5.0	5.0
	7	0.0	0.0
	8	0.0	0.0
	9	5.0	5.0
	10	5.0	5.0
	11	0.7	0.7
	12	0.0	0.0
	13	5.0	5.0
	14	5.0	5.0
IC29	1	0.0	0.0
	2	2.6	2.6
	3	5.0	5.0
	4	0.0	0.6
	5	1.9	1.9
	6	3.1	3.1
	7	1.9	1.9
	8	0.0	0.0
	9	4.7	4.7
	10	0.4	0.4
	11	5.0	5.0
	12	3.1	3.1
	13		
	14		
		4.6	4.6
IC29	15	0.0	0.0
	16	5.0	5.0
IC30	1	0.0	0.0
	2	5.0	5.0
	3	5.0	5.0
	4	0.0	0.0
	5	2.0	2.0
	6	0.0	0.0
	7	5.0	5.0
	8	0.0	0.0
	9	4.9	4.9
	10	0.2	0.2
	11	5.0	5.0
	12	5.0	5.0
	13	5.0	5.0
	14	4.8	4.8
	15	0.0	0.0
	16	5.0	5.0
IC31	1	3.7	3.7
	2	3.0	3.0
	3	5.0	5.0
	4	1.9	1.9
	5	1.5	1.5
	6	2.2	2.2
	7	3.0	3.0
	8	0.0	0.0
	9	3.0	3.0
	10	5.0	0.0
	11	2.6	2.6
	12	3.1	3.1
	13	3.3	3.3
	14	2.0	1.9
IC32	1	0.0	0.0
	2	0.0	2.7
	3	5.0	5.0
	4	3.0	3.0
	5	4.4	4.4
	6	3.0	3.0
	7	2.0	2.0
	8	0.0	0.0
	9	4.7	4.7
	10	0.3	0.3
	11	5.0	5.0
	12	3.0	3.0
	13	5.0	5.0
	14	4.7	4.7
	15	0.0	0.0
	16	5.0	5.0
IC33	1	0.0	0.0
	2	4.7	4.7
	3	5.0	5.0
	4	3.0	3.0
	5	5.0	5.0
	6	0.3	0.3
	7	4.7	4.7
	8	0.0	0.0
	9	4.7	4.7
	10	0.3	0.3
	11	5.0	5.0
	12	0.0	0.0
IC33	13	5.0	5.0
	14	4.6	4.6
	15	0.0	0.0
	16	5.0	5.0
IC34	1	0.4	0.4
	2	0.4	0.4
	3	2.6	2.6
	4	0.0	0.0
	5	2.4	2.5
	6	3.8	3.8
	7	4.7	4.7
	8	5.1	5.1
IC35	1	0.0	0.0
	2	0.0	0.0
	3	0.0	0.0
	4	0.0	0.0
	5	0.0	0.0
	6	0.0	0.0
	7	0.0	0.0
	8	2.5	2.5
	9	2.5	2.5
	10	2.5	2.5
	11	2.5	2.4
	12	0.1	0.0
	13	2.6	2.5
	14	5.2	5.1
IC36	1	6.6	6.6
	2	8.8	8.8
	3	2.3	2.3
	4	6.0	6.0
	5	0.0	0.0
	6	6.0	6.0
	7	2.3	2.3
	8	6.0	6.0
	9	6.1	6.1
IC37	1	6.6	6.6
	2	11.8	11.8
	3	2.7	2.7
	4	0.0	0.0
IC38	1	3.4	3.4
	2	5.0	5.0
	3	1.7	1.7
	4	0.0	0.0
IC39	1	2.8	2.8
	2	4.4	4.4
	3	0.0	0.0
	4	5.0	5.0
	5	5.0	5.0
IC40	1	0.0	0.0
	2	0.6	0.6
	3	4.1	4.1
	4	3.6	3.6
	5	5.0	5.0
	6	2.9	2.9
	7	0.0	0.0
	8	3.0	3.0
	9	4.9	4.9
	10	5.0	5.0
	11	0.2	0.2
	12	0.7	0.7
	13	4.9	4.9

- DC voltage (2/2) - (R/P COLOR 1)

SYMBOL No.		REC	PB	SYMBOL No.		REC	PB	SYMBOL No.		REC	PB	SYMBOL No.		REC	PB	SYMBOL No.		REC	PB	SYMBOL No.		REC	PB
IC40	14	4.1	4.1	**TRANSISTOR**				Q21	B	9.6	9.6	Q42	B	7.5	7.5	Q68	G	1.9	1.8	**CONNECTOR**			
	15	0.5	0.5	Q1	B	6.0	6.0		C	11.8	11.8		C	11.8	11.8		D	0.0	0.0	CN1	4A	3.2	3.2
	16	0.5	0.5		C	11.9	11.9		E	8.9	8.9		E	6.9	6.8		S	0.0	0.0		4 B	0.0	0.0
(BURST GATE PWB)					E	5.4	5.4	Q22	B	9.4	9.4	Q43	B	2.7	2.7	Q69	G	1.2	1.3		6A	3.0	3.0
IC20	1	0.0	0.0	Q2	B	1.0	1.0		C	11.8	11.8		C	5.0	5.0		D	0.0	0.0		6 B	0.0	0.0
	2	0.0	4.9		C	11.5	11.5		E	8.7	8.7		E	2.2	2.2		S	0.0	0.0		7A	2.8	2.9
	3	5.1	0.0		E	0.4	0.4	Q23	G	0.2	0.2	Q44	B	1.4	1.4	Q70	G	2.5	2.1		7 B	0.0	0.0
	4	0.0	0.0	Q3	B	0.4	0.4		D	0.0	0.0		C	4.3	4.3		D	2.1	2.0		8A	6.9	6.9
	5	4.3	4.3		C	0.0	0.0		S	0.0	0.0		E	0.9	0.9		S	0.0	0.0		8 B	0.0	0.0
	6	0.0	0.1		E	1.1	1.1	Q24	G	0.2	0.2	Q45	B	2.7	2.7	Q71	B	4.7	4.7		9A	4.7	4.7
	7	0.0	5.0	Q4	B	1.0	1.0		D	0.0	0.0		C	5.0	5.0		C	0.0	0.0		9 B	0.0	0.0
	8	0.0	0.0		C	11.5	11.5		S	0.0	0.0		E	2.4	2.5		E	0.0	0.0		12A	6.6	6.6
	9	5.1	5.0		E	0.4	0.4	Q25	B	0.9	0.9	Q46	B	2.7	2.7	Q72	B	4.7	4.7		12 B	0.0	0.0
	10	0.0	0.0	Q5	B	0.4	0.4		C	0.0	0.0		C	5.0	5.0		C	0.0	0.0		13A	2.1	2.1
	11	4.7	4.7		C	0.0	0.0		E	1.6	1.5		E	2.1	2.1		E	0.0	0.0		13 B	0.0	0.0
	12	0.0	0.0		E	1.1	1.1	Q26	B	2.2	0.0	Q48	B	2.7	2.7	(BURST GATE PWB)					16A	6.9	6.9
	13	0.2	0.2	Q6	B	7.5	7.5		C	1.5	0.1		C	5.0	5.0	Q20	B	4.3	4.3		16 B	0.0	0.0
	14	5.1	5.1		C	11.9	11.9		E	1.6	1.5		E	2.1	2.1		C	0.2	0.2		18A	5.4	5.3
	15	0.0	0.0		E	6.9	6.9	Q27	B	5.0	4.7	Q49	B	0.0	2.1		E	0.0	0.0		18 B	0.0	0.0
	16	5.1	5.1	Q7	B	0.4	0.4		C	0.0	4.9		C	2.9	2.8	Q21	B	0.1	0.1		20A	0.5	0.6
IC21	1	0.0	3.3		C	0.0	0.0		E	5.0	5.0		E	0.0	0.0		C	0.2	0.2		21A	6.0	6.0
	2	0.0	3.9		E	0.0	0.0	Q28	B	5.0	4.7	Q50	B	0.0	0.0		E	0.0	0.0		22A	4.9	0.2
	3	0.0	0.0	Q8	B	0.7	0.7		C	0.0	5.0		C	2.7	2.6	(BUFFER PWB)					22 B	0.2	0.2
	4	5.1	5.1		C	0.1	0.0		E	5.0	5.0		E	0.0	0.0	Q73	B	3.6	3.6	CN2	1AB	0.0	0.0
	5	2.4	2.4		E	0.0	0.0	Q29	B	2.7	2.7	Q51	B	2.8	2.8		C	11.8	11.8		2AB	0.0	0.0
	6	0.0	2.3	Q9	B	11.2	11.1		C	5.0	5.0		C	5.0	5.0		E	3.0	3.0		3AB	7.9	7.9
	7	0.0	0.0		C	11.8	11.8		E	2.1	2.1		E	2.4	2.5						4AB	14.7	14.7
	8	0.0	0.0		E	10.5	10.5	Q30	B	2.0	2.0	Q52	B	2.7	2.7						7A	4.7	4.8
				Q10	B	1.2	1.2		C	5.0	5.0		C	5.1	5.1						7 B	0.0	0.0
					C	11.3	11.3		E	1.4	1.4		E	2.5	2.6						8A	0.0	0.0
					E	0.6	0.6	Q31	B	2.7	2.7	Q53	B	2.6	2.6						8 B	0.0	0.0
				Q11	B	0.6	0.6		C	5.0	5.0		C	11.9	11.9						9A	0.0	0.0
					C	0.0	0.0		E	2.1	2.1		E	2.0	2.0						9 B	0.0	0.0
					E	1.3	1.3	Q32	B	0.0	4.5	Q54	B	2.5	2.8						11A	4.6	4.6
				Q12	B	1.2	1.3		C	0.2	0.0		C	5.0	5.0						11 B	0.0	0.0
					C	11.3	11.3		E	0.0	0.0		E	2.0	2.3						13A	2.0	2.6
					E	0.6	0.6	Q33	B	4.0	4.0	Q55	B	1.9	1.9						13 B	0.0	0.0
				Q13	B	0.6	0.6		C	5.0	5.0		C	3.1	3.1						15A	2.5	2.9
					C	0.0	0.0		E	3.4	3.4		E	1.3	1.3						15 B	0.0	0.0
					E	1.3	1.3	Q34	B	1.6	1.6	Q56	B	3.1	3.1						18A	0.3	0.3
				Q14	B	7.5	7.5		C	4.0	4.0		C	5.0	5.0						18 B	0.0	0.0
					C	11.8	11.8		E	1.1	1.1		E	2.5	2.5						21A	6.9	6.9
					E	6.9	6.9	Q35	B	3.3	3.3	Q57	B	5.0	0.0								
				Q15	B	3.7	3.7		C	5.0	5.0		C	5.0	5.0								
					C	11.8	11.8		E	2.8	2.9		E	4.4	0.0								
					E	3.2	3.2	Q36	B	2.8	2.9	Q58	B	5.0	5.0								
				Q16	B	11.1	11.1		C	0.0	0.0		C	5.0	5.0								
					C	3.7	3.7		E	3.3	3.3		E	4.4	4.4								
					E	11.7	11.7	Q37	B	5.0	0.0	Q59	B	6.3	6.3								
				Q17	B	2.1	2.1		C	0.0	0.0		C	11.8	11.8								
					C	11.1	11.1		E	0.0	0.0		E	5.6	5.6								
					E	1.5	1.5	Q38	B	5.0	5.0	Q62	B	3.7	3.7								
				Q18	B	6.7	6.7		C	5.0	5.0		C	5.0	5.0								
					C	11.8	11.8		E	4.7	4.7		E	3.1	3.1								
					E	6.1	6.1	Q39	B	2.5	2.5	Q63	B	3.1	3.1								
				Q19	B	3.7	3.7		C	5.0	5.0		C	0.0	0.0								
					C	11.8	11.8		E	2.3	2.3		E	3.7	3.7								
					E	3.1	3.1	Q41	B	5.0	0.0	Q67	B	3.7	3.0								
				Q20	B	3.7	3.7		C	0.0	7.4		C	0.6	0.5								
					C	8.7	8.7		E	0.0	0.0		E	0.0	0.0								
					E	3.1	3.1																

4.31 REC/PB COLOR-1 SCHEMATIC DIAGRAM

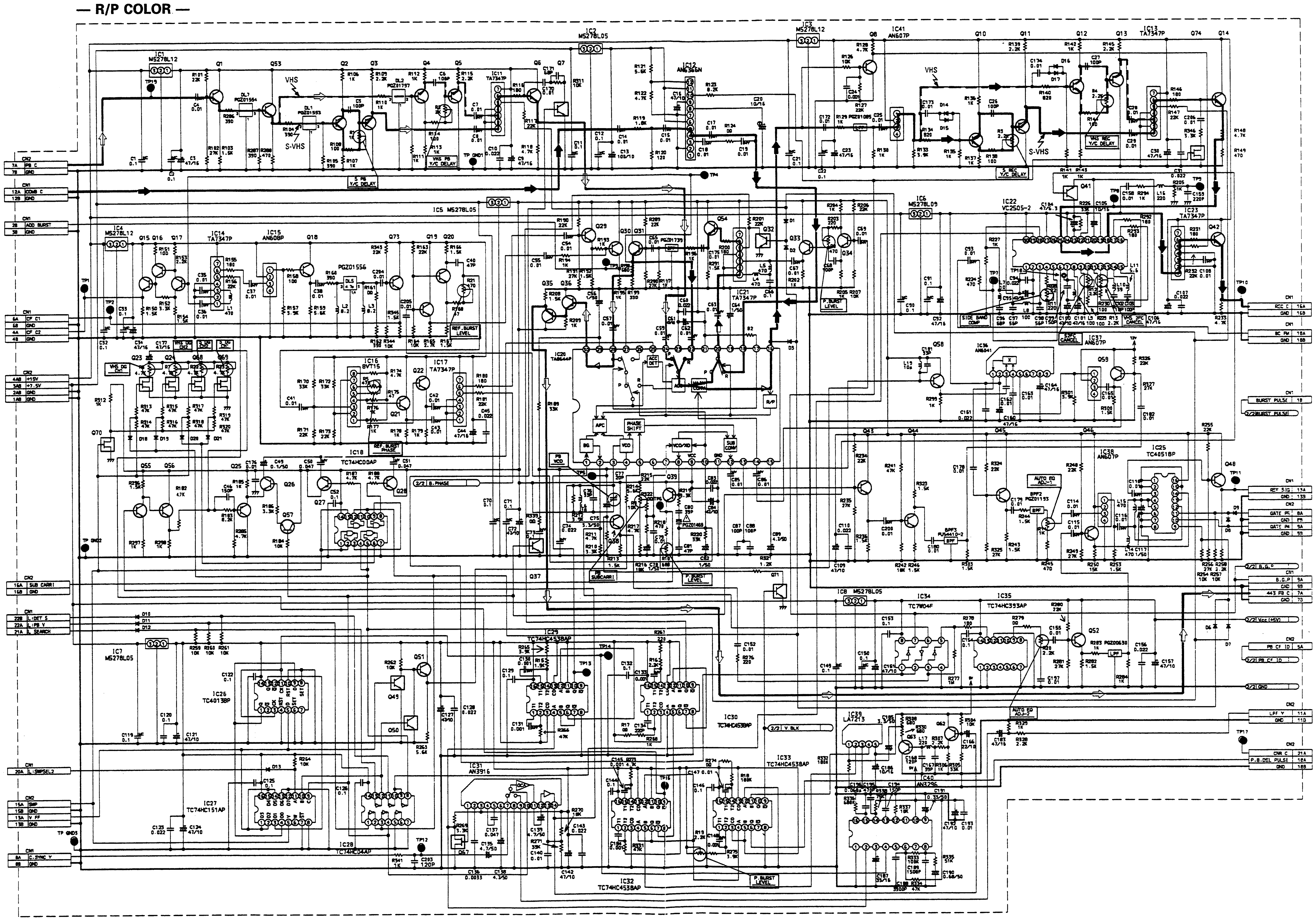
— R/P COLOR —
IC1 M5278L12
IC2 M5278L05
IC3 M5278L12
IC4 M5278L12
IC5 M5278L05
IC6 M5278L09
IC7 M5278L05
IC8 M5278L05
IC11 TA7347P
IC12 AN5365N
IC13 TA7347P
IC14 TA7347P
IC15 AN608P
IC16 BVT15
IC17 TA7347P
IC18 TC74HC00AP
IC20 TA8644P
IC21 TA7347P
IC22 VC2505-2
IC23 TA7347P
IC25 TC4051BP
IC26 TC4013BP
IC27 TC74HC151AP
IC28 TC74HC04AP
IC29 TC74HC4538AP
IC30 TC74HC4538AP
IC31 AN3916
IC32 TC74HC4538AP
IC33 TC74HC4538AP
IC34 TC7W04F
IC35 TC74HC393AP
IC36 AN6841
IC37 AN607P
IC38 AN607P
IC39 LA7213
IC40 AN3296
IC41 AN607P
VHS
S-VHS
S PB Y/C DELAY
VHS PB Y/C DELAY
VHS REC Y/C DELAY
S REC Y/C DELAY
REF. BURST LEVEL
REF. BURST PHASE
P. BURST LEVEL
SIDE BAND COMP
VHS 3FC CANCEL
S3FC CANCEL
ACC DET
APC
PHASE SHIFT
VCO
SUB CONV
AUTO EQ ADJ-1
AUTO EQ ADJ-2
PB SUBCARRI
PB VCO
R/P
CN1
CN2
PB C
COMB C
ADD BURST
CF C1
CF C2
+15V
+7.5V
SUB CARRI
L:DET S
L:PB Y
L:SEARCH
L:SWPSEL2
SWP
V FF
C.SYNC Y
REC C
BC FM
BURST PULSE
2/2 BURST PULSE
REF SIG
GATE P1
GATE P4
2/2 B.G.P
B.G.P
443 FB C
2/2 Vcc (+5V)
PB CF ID
2/2 PB CF ID
2/2 GND
LPF Y
CNR C
P.B.DEL PULSE
2/2 8.PHASE
2/2 V.BLK
GND

— BURST GATE —

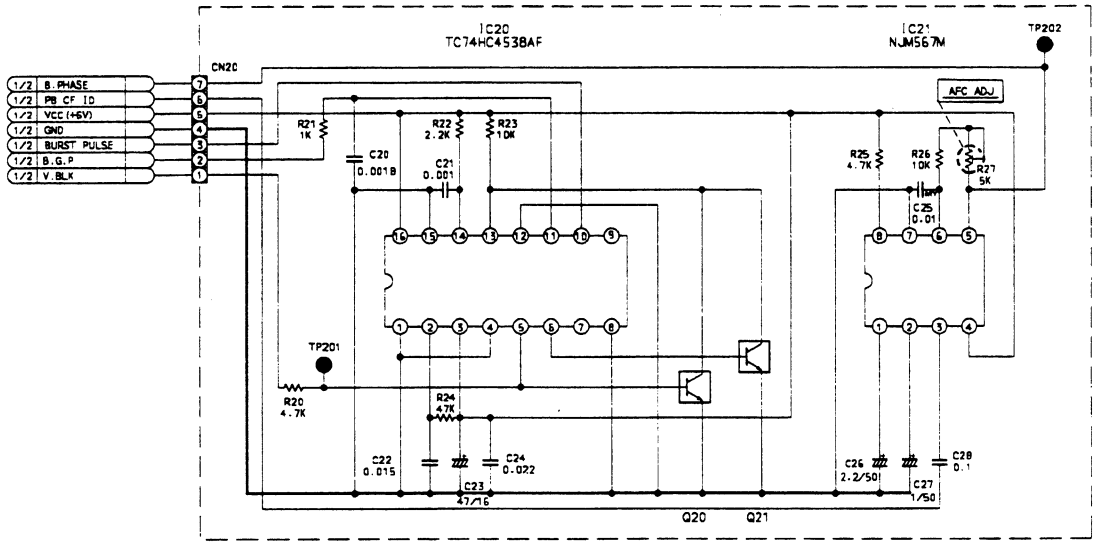
IC20
TC74HC4538AF
IC21
NJM567M
TP202
CN20
1/2 B.PHASE
1/2 PB CF ID
1/2 VCC (+6V)
1/2 GND
1/2 BURST PULSE
1/2 B.G.P
1/2 V.BLK
AFC ADJ
R21 1K
C20 0.0018
R22 2.2K
R23 10K
C21 0.001
R25 4.7K
R26 10K
R27 5K
C25 0.01
TP201
R20 4.7K
R24 47K
C22 0.015
C23 47/16
C24 0.022
C26 2.2/50
C27 1/50
C28 0.1
Q20
Q21

PRK20188

— WIRING TABLE —

11 R/P C

CN 1				
1A	BURST PULSE	→	12 R/P COLOR-2	CN1-1A
2B	ADD BURST	→	12 R/P COLOR-2	CN1-2B
4A	CF C2	→	12 R/P COLOR-2	CN1-4A
6A	CF C1	→	12 R/P COLOR-2	CN1-6A
7A	443 PB C	→	16 R/P ADJUST	CN1-7A
8A	C SYNC Y	←	10 R/P Y	CN1-8A
9A	B. G. P.	→	12 R/P COLOR-2	CN1-9A
12A	COMB C	←	17 Y COMB	CN1-17A
13A	REF SIG	→	10 R/P Y	CN1-13A
16A	REC C	→	16 R/P ADJUST	CN1-22A
18A	BC FM	→	16 R/P ADJUST	CN1-27A
20A	SWP SEL2	←	41 AVM/ONSC	CN1-19A
21A	L: SEARCH	←	16 R/P ADJUST	CN1-5A
22A	L: PB V	←	16 R/P ADJUST	CN1-6A
22B	L: DET S	←	41 AVM/ONSC	CN1-6B

CN 2				
5A	PB CF ID	←	12 R/P COLOR-2	CN2-5A
7A	PB C	←	16 R/P ADJUST	CN1-24A
8A	GATE P5	←	17 Y COMB	CN1-11A
9A	GATE P4	←	17 Y COMB	CN1-12A
11A	LPF Y	←	10 R/P Y	CN211A
13A	VIDEO FF	←	30 D/C SERVO	CN20
15A	SW P	→	16 R/P ADJUST	CN1-20A
		→	19 OUTPUT	CN1-20A
		→	BRUSH	CN29
16A	SUB CARRI	→	17 Y COMB	CN2-19B
18A	PB DEL P	←	12 R/P COLOR-2	CN2-18A
21A	CNR C	←	12 R/P C-OLOR2	CN2-21A

— MAIN WAVEFORMS OF REC/PB COLOR CIRCUIT —

TP1

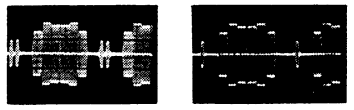
[S-VHS REC] [VHS REC]
380 mVp-p: Burst level

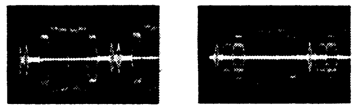
[S-VHS PB] [VHS PB]
440 mVp-p: Burst level

TP2, TP3

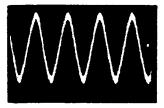
TP2: 220 mVp-p /4.43 MHz
TP3: 130 mVp-p /4.43 MHz

TP4

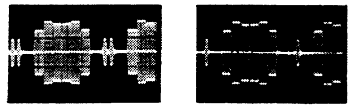
[S-VHS REC] [VHS REC]
140 mVp-p: Burst level

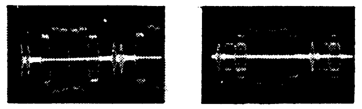
[S-VHS PB] [VHS PB]
150 mVp-p: Burst level

TP6

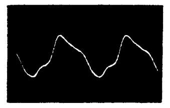
1.4 Vp-p/ 4.43 MHz

TP7

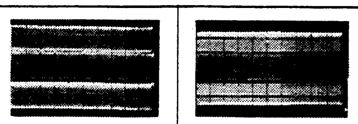
[S-VHS REC] 300 mVp-p
[VHS REC] 260 mVp-p

TP8, TP9

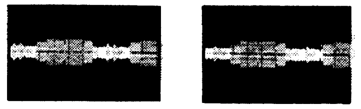
[S-VHS REC] [VHS REC]
TP8: 50 mVp-p
TP9: 60 mVp-p

TP10

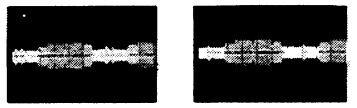
[S-VHS REC] [VHS REC]
75 mVp-p: Burst level

TP12

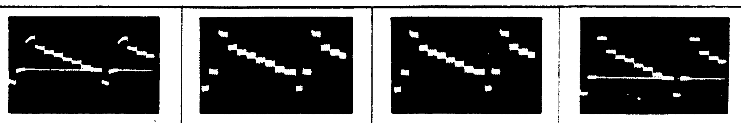
[S-VHS REC] 300 mVp-p
[VHS REC] 190 mVp-p
[S-VHS PB] 190 mVp-p
[VHS PB] 500 mVp-p

TP13

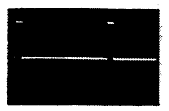
5.0 Vp-p/15.63 kHz

TP14

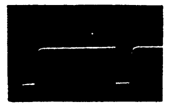
5.0 Vp-p/15.63 kHz

TP16

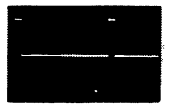
5.0 Vp-p/15.63 kHz

TP17

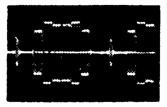
[REC]
260 mVp-p
: Burst level

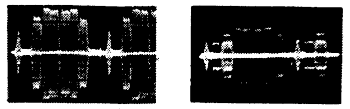
[S-VHS PB] [VHS PB]
290 mVp-p: Burst level

TP18

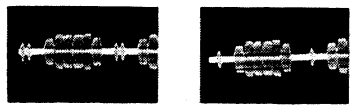
[S-VHS REC] [VHS REC]
70 mVp-p: Burst level

TP19

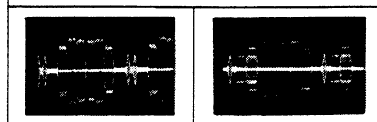
[S-VHS PB] 570 mVp-p : Burst level
[VHS PB] 820 mVp-p : Burst level

TP201

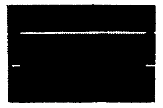
4.5 Vp-p/50 Hz

TP202

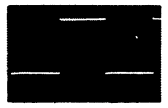
3.8 Vp-p/7.812 kHz

4.32 REC/PB COLOR-2 SCHEMATIC DIAGRAM

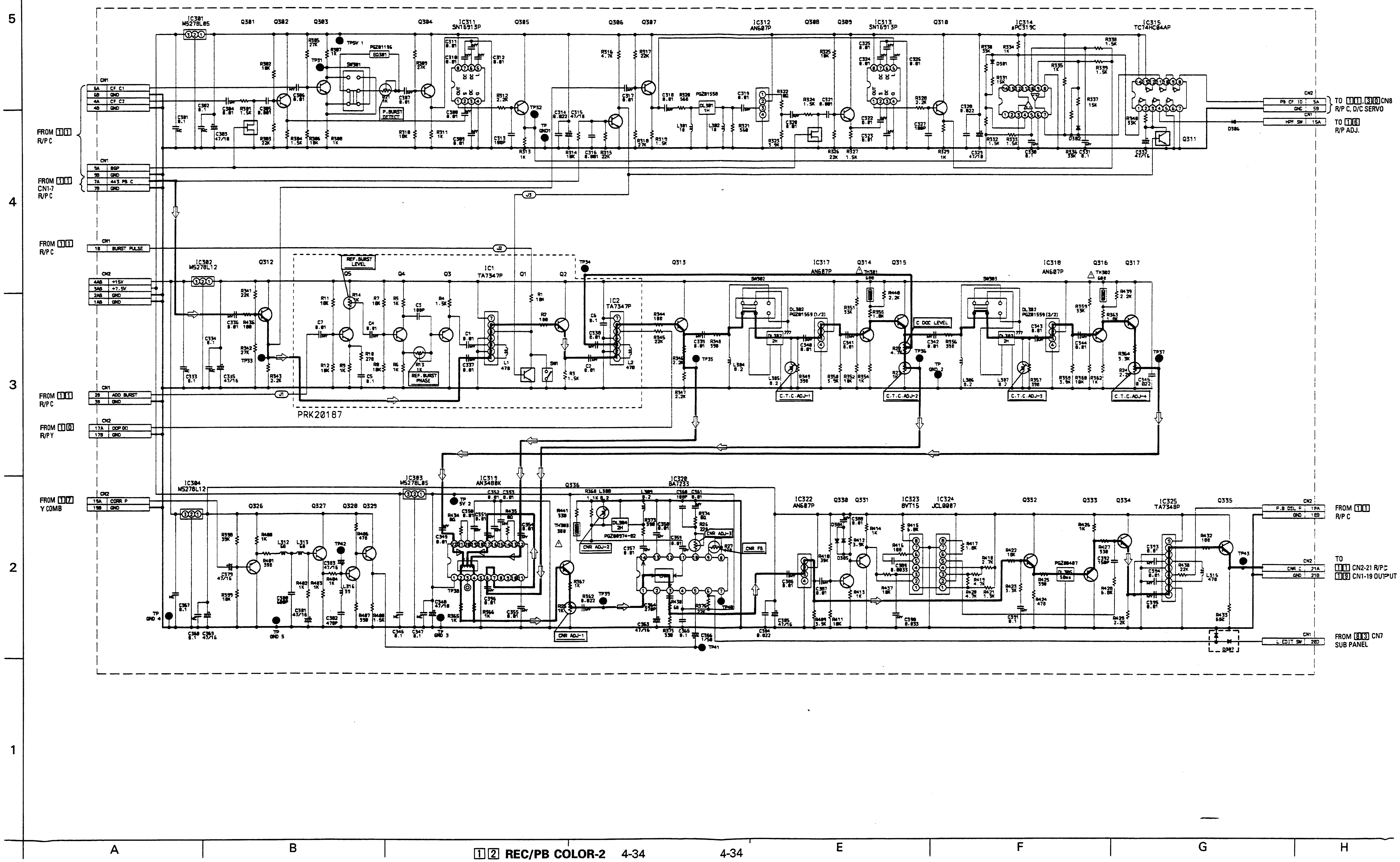
6
5
4
3
2
1
A
B
C
D
E
F
G
H
FROM 1 1 R/P C
CN1 6A CF C1
6B GND
4A CF C2
4B GND
CN1 9A BGP
9B GND
FROM 1 1 CN1-7 R/P C
7A 443 PB C
7B GND
FROM 1 1 R/P C
CN1 1B BURST PULSE
CN2 4AB +15V
3AB +7.5V
2AB GND
1AB GND
FROM 1 1 R/P C
CN1 2B ADD BURST
3B GND
FROM 1 0 R/P Y
CN2 17A DOP (X)
17B GND
FROM 1 7 Y COMB
CN2 19A CORR P
19B GND
IC301 M5278L05
Q301
Q302
Q303
Q304
IC311 SN16913P
Q305
Q306
Q307
IC312 AN607P
Q308
Q309
IC313 SN16913P
Q310
IC314 μPC319C
IC315 TC74HC04AP
Q311
TPSV 1
PGZ01196
SW301
P.BURST DETECT
PGZ01550
DL301
D386
CN2 PB CF ID 5A
GND 5B
TO 1 1, 3 0 CN8 R/P C, D/C SERVO
CN1 HPF SW 15A
TO 1 6 R/P ADJ.
IC302 M5278L12
Q312
REF.BURST LEVEL
Q5
Q4
Q3
IC1 TA7347P
Q1
Q2
IC2 TA7347P
REF.BURST PHASE
PRK20187
TP33
TP34
TP35
TP36
TP37
Q313
IC317 AN607P
Q314
Q315
SW302
DL302 PGZ01559 (1/2)
TH301
C DOC LEVEL
C.T.C.ADJ-1
C.T.C.ADJ-2
IC318 AN607P
Q316
Q317
SW303
DL303 PGZ01559 (2/2)
TH302
C.T.C.ADJ-3
C.T.C.ADJ-4
IC304 M5278L12
Q326
Q327
Q328
Q329
IC303 M5278L05
IC319 AN3480K
Q336
IC320 BA7233
CNR ADJ-1
CNR ADJ-2
CNR ADJ-3
CNR FB
PGZ00574-02
TH303
IC322 AN607P
Q330
Q331
IC323 8VT15
IC324 JCL0087
Q332
PGZ00487
Q333
Q334
IC325 TA7348P
Q335
TP43
D387
CN2 P.B DEL F 18A
GND 18B
FROM 1 1 R/P C
CN2 CNR C 21A
GND 21B
TO 1 1 CN2-21 R/PC 1 9 CN1-19 OUTPUT
CN1 L EDIT SW 28D
FROM 8 3 CN7 SUB PANEL
TP GND 4
TP GND 5
TP GND 3
TP41

- DC voltage (1/2) - (R/P COLOR 2)

SYMBOL No.		REC	PB
INTEGRATED CIRCUIT			
IC301	1	5.1	5.1
	2	0.0	0.0
	3	7.9	7.9
IC302	1	11.8	11.8
	2	0.0	0.0
	3	14.7	14.7
IC303	1	5.0	5.0
	2	0.0	0.0
	3	7.9	7.9
IC304	1	11.8	11.8
	2	0.0	0.0
	3	14.7	14.7
IC311	1	4.3	4.3
	2	2.5	2.5
	3	1.9	1.9
	4	0.0	0.0
	5	1.9	1.9
	6	2.5	2.5
	7	2.5	2.5
	8	5.1	5.1
IC312	1	3.1	3.1
	2	5.1	5.1
	3	1.7	1.7
	4	0.0	0.0
IC313	1	4.3	4.3
	2	2.5	2.5
	3	1.9	1.9
	4	0.0	0.0
	5	1.9	1.9
	6	2.5	2.5
	7	2.5	2.5
	8	5.1	5.1
IC314	1	0.0	0.0
	2	0.0	0.0
	3	0.0	0.0
	4	3.8	3.8
	5	3.6	3.6
	6	0.0	0.0
	7	2.7	2.7
	8	0.0	0.0
	9	3.6	3.6
	10	3.6	3.6
	11	5.1	5.1
	12	5.0	5.0
	13	0.0	0.0
	14	0.0	0.0
IC315	1	5.0	5.0
	2	0.0	0.0
	3	0.0	0.0
	4	5.1	5.1
	5	0.0	0.0
	6	5.1	5.1
	7	0.0	0.0
	8	2.6	2.6
	9	2.5	2.5
	10	0.0	2.5
	11	2.7	2.7
	12	0.0	0.0
	13	5.1	5.1
	14	5.1	5.1
IC316	1	8.2	8.2
	2	0.0	0.0
	3	8.3	8.3
	4	0.0	0.0
	5	0.0	0.0
	6	7.5	7.5
	7	11.8	11.8
IC317	1	6.1	6.1
	2	11.8	11.8
	3	2.7	2.7
	4	0.0	0.0
IC318	1	6.4	6.4
	2	11.8	11.8
	3	0.0	2.7
	4	0.0	0.0
IC319	1	5.0	5.0
	2	2.0	2.0
	3	3.6	3.6
	4	2.5	2.5
	5	0.0	0.0
	6	3.4	3.4
	7	2.4	2.4
	8	4.0	4.0
	9	2.5	2.5
	10	3.0	3.0
	11	2.2	2.2
	12	3.3	3.3
	13	2.6	2.6
	14	2.6	2.6
	15	2.3	2.3
	16	2.3	2.3
	17	2.7	2.7
	18	2.1	2.1
	19	2.3	2.3
	20	2.6	2.6
	21	2.6	2.6
	22	3.3	3.3
IC320	1	3.3	3.3
	2	2.7	2.7
	3	3.6	3.6
	4	5.0	5.0
	5	3.3	3.3
	6	0.5	0.5
	7	0.0	3.0
	8	2.0	2.0
	9	1.9	1.9
	10	2.0	2.0
	11	3.3	3.3
	12	0.0	0.0
	13	1.9	1.9
	14	2.2	2.3
IC321	1	8.1	8.1
	2	4.4	4.4
	3	4.4	4.4
	4	8.1	8.1
	5	3.7	3.7
	6	3.7	3.7
	7	0.0	0.0
	8	1.5	1.5
IC322	1	6.4	6.5
	2	11.8	11.8
	3	2.7	2.7
	4	0.0	0.0
IC323	1	9.5	9.5
	2	5.4	5.4
	3	5.5	5.4
	4	8.0	8.0
	5	4.8	4.8
	6	5.1	5.1
	7	0.0	0.0
	8	1.1	1.1
IC324	1	9.5	9.5
	2	11.8	11.8
	3	8.8	8.7
	4	8.0	8.0
	5	8.0	8.0
	6	6.4	6.4
	7	0.0	0.0
	8	5.4	5.4
IC325	1	8.3	8.3
	2	0.0	0.0
	3	8.3	8.3
	4	0.3	0.3
	5	0.0	0.0
	6	8.3	8.3
	7	0.0	0.0
	8	7.5	7.5
	9	11.8	11.8
(BURST SW PWB)			
IC1	1	8.2	8.2
	2	0.0	0.0
	3	8.2	8.2
	4	0.0	0.0
	5	0.0	0.0
	6	7.4	7.4
	7	11.8	11.8
IC2	1	8.3	8.3
	2	0.0	0.0
	3	8.3	8.3
	4	0.0	0.0
	5	0.0	0.0
	6	7.5	7.5
	7	11.8	11.8

- DC voltage (2/2) - (R/P COLOR 2)

SYMBOL No.		REC	PB	SYMBOL No.		REC	PB	SYMBOL No.		REC	PB
TRANSISTOR				Q322	B	7.8	7.8	**CONNECTOR**			
Q301	G	4.7	4.7		C	11.8	11.8	CN1	4A	3.5	3.5
	D	0.0	0.0		E	7.2	7.2		4 B	0.0	0.0
	S	0.0	0.0	Q323	B	7.5	7.5		6A	3.1	3.1
Q302	B	3.4	3.4		C	11.8	11.8		6 B	0.0	0.0
	C	5.1	5.1		E	7.2	7.2		7A	2.8	2.9
	E	2.8	2.6	Q324	B	7.5	7.5		7 B	0.0	0.0
Q303	B	2.0	2.0		C	11.8	11.8		9A	4.7	4.7
	C	3.7	3.7		E	7.2	7.2		9 B	0.0	0.0
	E	1.4	1.4	Q326	B	2.6	2.6		15A	4.5	4.6
Q304	B	2.0	2.0		C	0.0	0.0	CN2	1AB	0.0	0.0
	C	5.1	5.1		E	3.2	3.2		2AB	0.0	0.0
	E	1.4	1.4	Q327	B	3.2	3.2		3AB	7.9	7.9
Q305	B	4.3	4.3		C	11.8	11.8		4AB	14.7	14.7
	C	5.1	5.1		E	2.6	2.6		5A	2.6	2.6
	E	3.6	3.6	Q328	B	2.6	2.6		5 B	0.0	0.0
Q306	B	0.6	0.6		C	9.4	9.4		17A	0.0	0.0
	C	0.0	0.0		E	2.0	2.0		17 B	0.0	0.0
	E	0.0	0.0	Q329	B	9.4	9.4		18A	0.3	0.3
Q307	B	2.7	2.7		C	11.8	11.8		18 B	0.0	0.0
	C	5.1	5.1		E	8.8	8.8		19A	7.0	7.0
	E	2.2	2.2	Q330	B	2.4	2.4		19 B	0.0	0.0
Q308	G	4.7	4.7		C	4.9	4.9		21A	6.8	6.8
	D	0.0	0.0		E	2.1	2.1		21 B	0.0	0.0
	S	0.0	0.0	Q331	B	4.9	4.9				
Q309	B	3.4	3.4		C	0.0	0.0				
	C	5.1	5.1		E	5.4	5.4				
	E	2.8	2.8	Q332	B	5.9	5.9				
Q310	B	4.2	4.2		C	11.8	11.8				
	C	5.1	5.1		E	5.3	5.3				
	E	3.6	3.6	Q333	B	5.3	5.3				
Q311	B	0.0	0.0		C	0.0	0.0				
	C	0.0	0.0		E	5.9	5.9				
	E	0.0	0.0	Q334	B	5.9	5.9				
Q312	B	6.4	6.4		C	11.8	11.8				
	C	11.8	11.8		E	5.4	5.4				
	E	5.9	5.9	Q335	B	7.5	7.5				
Q313	B	7.4	7.4		C	11.8	11.8				
	C	11.8	11.8		E	6.8	6.8				
	E	6.9	6.9	Q336	B	2.3	2.3				
Q314	B	2.7	2.7		C	5.0	5.0				
	C	7.2	7.2		E	1.9	1.9				
	E	2.1	2.1								
Q315	B	7.2	7.2								
	C	11.8	11.8								
	E	6.7	6.7								
Q316	B	4.6	4.6								
	C	7.9	7.9								
	E	4.0	4.0								
Q317	B	7.9	7.9								
	C	11.8	11.8								
	E	7.4	7.4								
Q319	B	8.1	8.1								
	C	11.8	11.8								
	E	7.5	7.5								
Q320	B	8.1	8.1								
	C	11.8	11.8								
	E	7.5	7.5								
Q321	B	1.5	1.5								
	C	7.8	7.8								
	E	0.9	0.9								

4.33 REC/PB COLOR-2 CIRCUIT BOARD

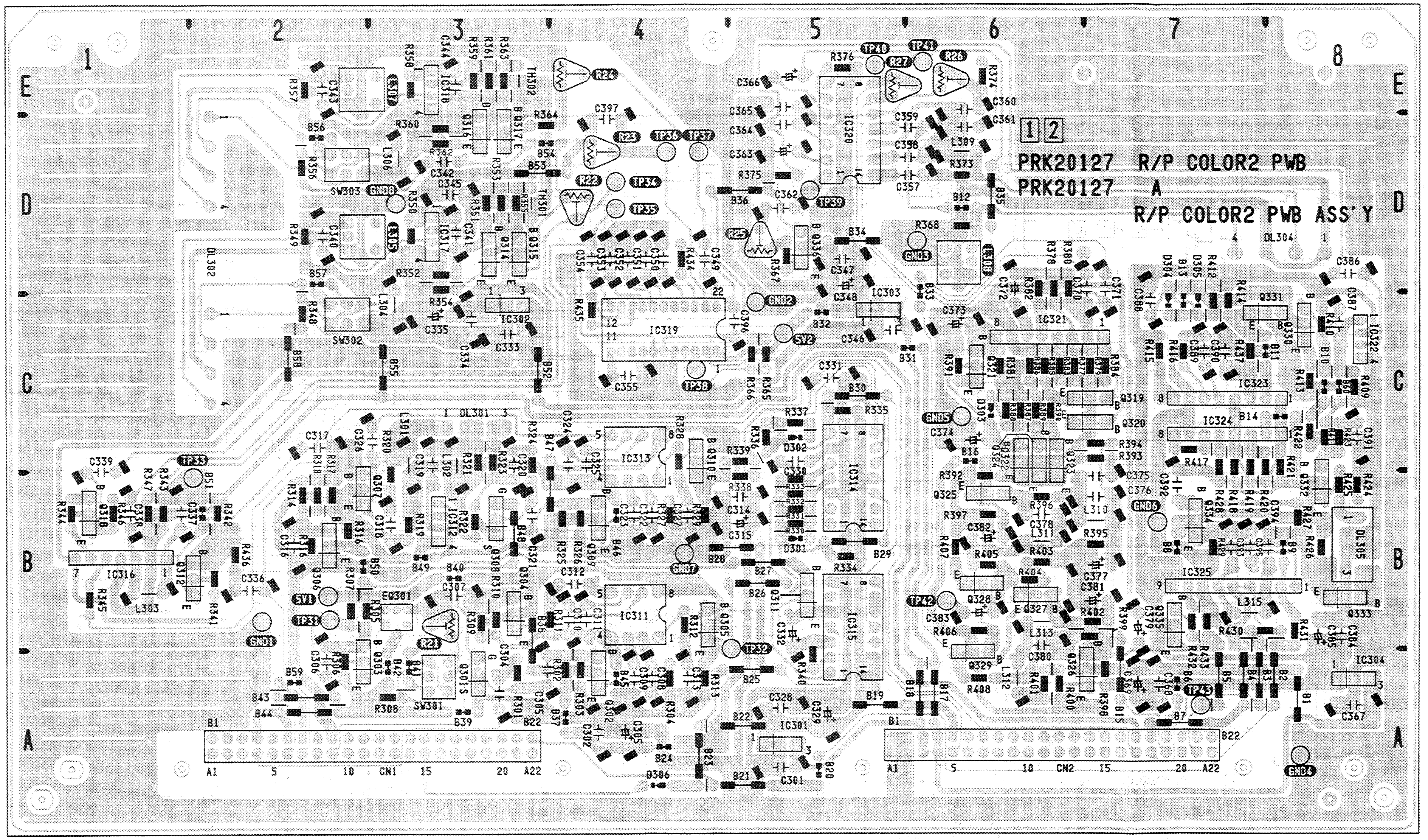
1 2
PRK20127 R/P COLOR2 PWB
PRK20127 A
R/P COLOR2 PWB ASS'Y
IC301
IC302
IC303
IC311
IC312
IC313
IC314
IC315
IC316
IC317
IC318
IC319
IC320
IC321
IC322
IC323
IC324
IC325
IC304
CN1
CN2
DL301
DL302
DL304
DL305
SW302
SW303
SW381
EQ301
TP31
TP32
TP33
TP34
TP35
TP36
TP37
TP38
TP39
TP40
TP41
TP42
TP43
GND1
GND2
GND3
GND4
GND5
GND6
GND7
GND8
5V1
5V2
R21
R22
R23
R24
R25
R26
R27
A
B
C
D
E
1
2
3
4
5
6
7
8

— MAINWAVEFORMS OF REC/PB COLOR-2 CIRCUIT —

TP33 ~ TP35, TP37 ~ TP39		TP36		TP41	TP42	TP43	
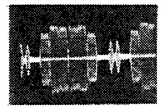	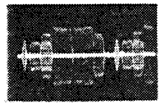	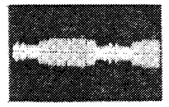	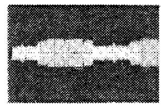	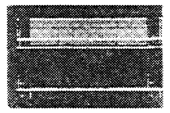	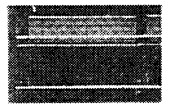	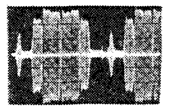	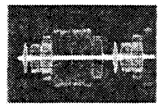
[S-VHS PB]	[VHS PB]	[S-VHS PB]	[VHS PB]	UPPER: VIDEO OUT LOWER: TP41	UPPER: VIDEO OUT LOWER: TP42	[S-VHS PB]	[VHS PB]
TP33 360 mVp-p: Burst level TP34 420 mVp-p: Burst level TP35 140 mVp-p: Burst level TP37 120 mVp-p: Burst level TP38 55 mVp-p: Burst level TP39 140 mVp-p: Burst level		55 mVp-p				300 mVp-p: Burst level	

4.34 REC/PB ADJUST SCHEMATIC DIAGRAM

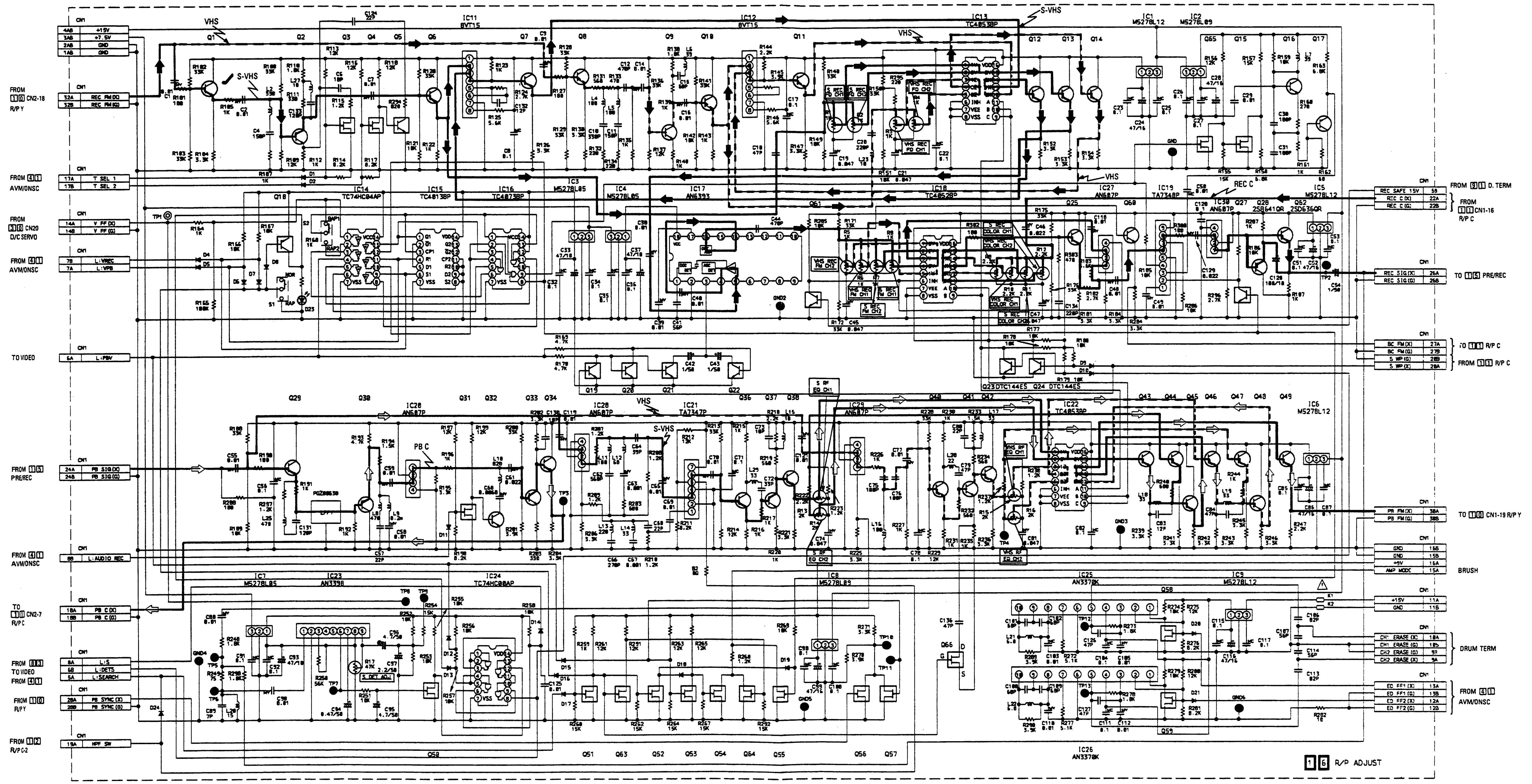
CN1 4AB +15V
3AB +7.5V
2AB GND
1AB GND
FROM 1 0 CN2-18 R/P Y
32A REC FM(X)
32B REC FM(G)
FROM 4 1 AVM/ONSC
17A T SEL 1
17B T SEL 2
FROM 3 0 CN20 D/C SERVO
14A V FF(X)
14B V FF(G)
FROM 4 1 AVM/ONSC
7B L:VREC
7A L:VPB
TO VIDEO
6A L:PBV
FROM 1 5 PRE/REC
24A PB SIG(X)
24B PB SIG(G)
FROM 4 1 AVM/ONSC
8B L:AUDIO REC
TO 1 1 CN2-7 R/P C
18A PB C(X)
18B PB C(G)
FROM 8 3
TO VIDEO
FROM 4 1
8A L:S
6B L:DETS
5A L:SEARCH
FROM 1 0 R/P Y
28A PB SYNC(X)
28B PB SYNC(G)
FROM 1 2 R/P C-2
19A HPF SW
REC SAFE 15V 5B
FROM 9 1 D. TERM
REC C(X) 22A
REC C(G) 22B
FROM 1 1 CN1-16 R/P C
REC SIG(X) 26A
REC SIG(G) 26B
TO 1 5 PRE/REC
BC FM(X) 27A
BC FM(G) 27B
TO 1 1 R/P C
S WP(G) 28B
S WP(X) 28A
FROM 1 1 R/P C
PB FM(X) 38A
PB FM(G) 38B
TO 1 0 CN1-19 R/P Y
GND 16B
GND 15B
+9V 16A
AMP MODE 15A
BRUSH
+15V 11A
GND 11B
CH1 ERASE (X) 18A
CH1 ERASE (G) 18B
CH2 ERASE (G) 9B
CH2 ERASE (X) 9A
DRUM TERM
ED FF1(X) 13A
ED FF1(G) 13B
ED FF2(X) 12A
ED FF2(G) 12B
FROM 4 1 AVM/ONSC
VHS
S-VHS
IC11 8VT15
IC12 8VT15
IC13 TC4053BP
IC1 M5278L12
IC2 M5278L09
IC14 TC74HC04AP
IC15 TC4013BP
IC16 TC4073BP
IC3 M5278L05
IC4 M5278L05
IC17 AN6393
IC18 TC4052BP
IC27 AN687P
IC19 TA7348P
IC30 AN687P
Q62 2SD636QR
2SB641QR
IC5 M5278L12
REC C
PB C
IC20 AN687P
IC28 AN687P
IC21 TA7347P
IC29 AN687P
IC22 TC4053BP
IC6 M5278L12
Q23 DTC144ES
Q24 DTC144ES
IC7 M5278L05
IC23 AN3398
IC24 TC74HC00AP
IC8 M5278L09
IC25 AN3370K
IC9 M5278L12
IC26 AN3370K
S DET ADJ
1 6 R/P ADJUST

4.35 REC/PB ADJUST CIRCUIT BOARD

— R/P ADJUST —

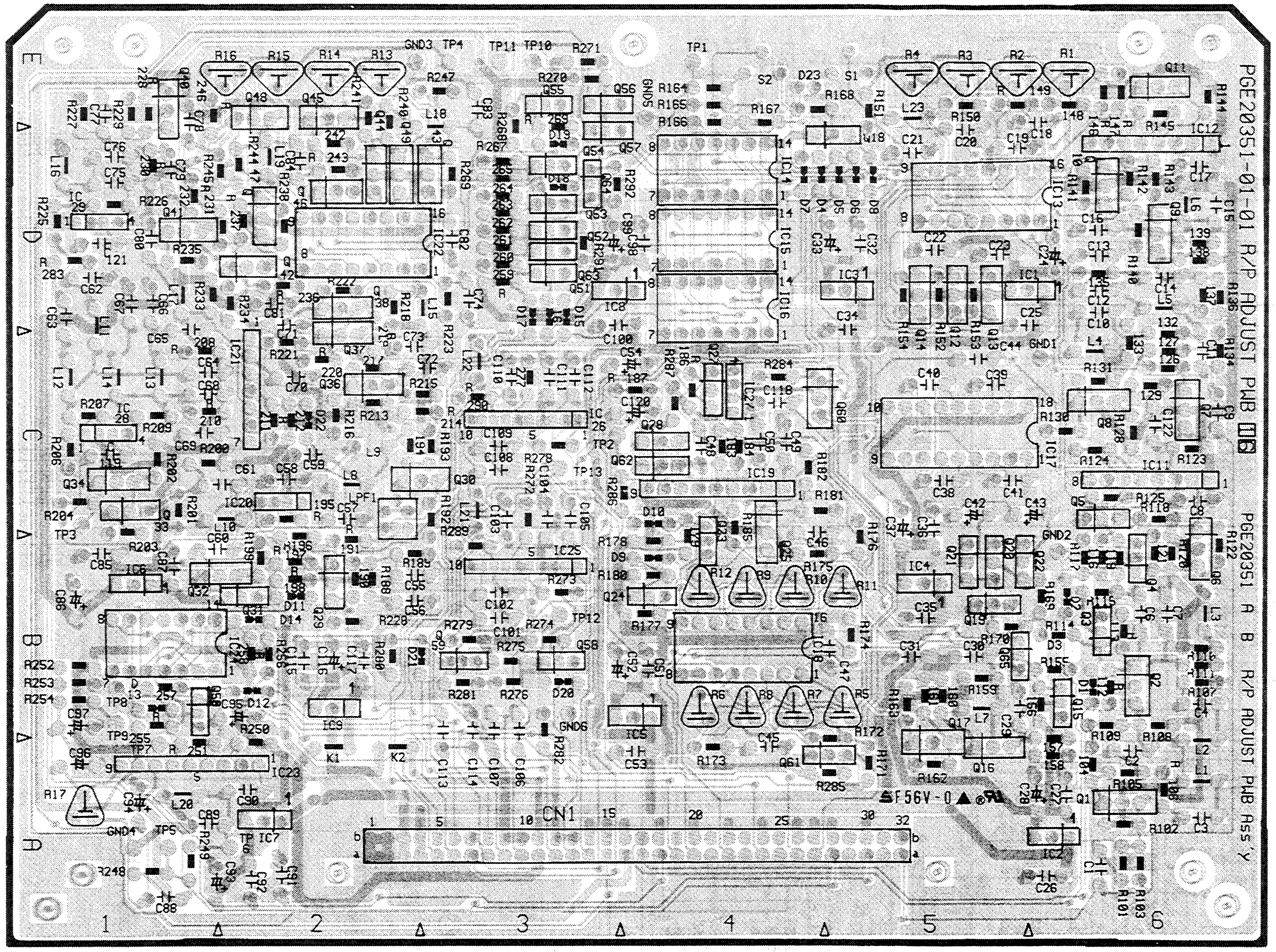
PGE20351-01-01 R/P ADJUST PWB ⑪⑥
PGE20351 A B R/P ADJUST PWB Ass'y
CN1
1
5
10
15
20
25
30
32
TP1
TP2
TP3
TP4
TP5
TP7
TP8
TP9
TP10
TP11
TP12
TP13
GND1
GND2
GND3
GND4
GND5
GND6
K1
K2
S1
S2

— R/P ADJ SUB —

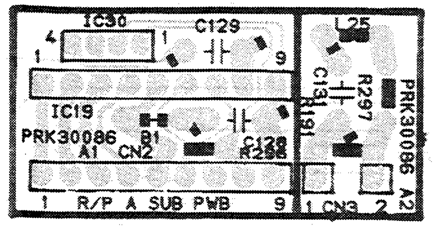
IC30
C129
IC19
PRK30086 B1
A1 CN2
R/P A SUB PWB
CN3
PRK30086 A2
R297
C131
L25
R298
C128

— MAIN WAVEFORMS OF REC/PB ADJUST CIRCUIT —

TP1 (TP8)	TP2	TP3		TP4		TP5, TP6			TP10	TP12, TP13
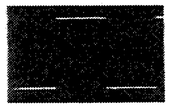	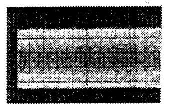	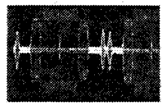	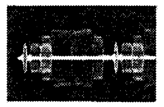	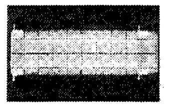	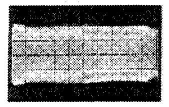	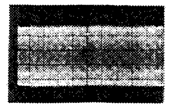	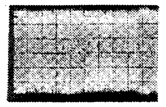	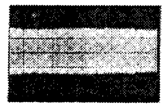	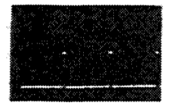	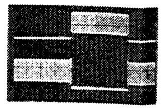
4.7 Vp-p/25 Hz D. FF	[REC] S-VHS: 2.1 Vp-p VHS: 1.7 Vp-p	[S-VHS PB] 550 mVp-p : Burst level	[VHS PB] 850 mVp-p : Burst level	[S-VHS PB] 300 mVp-p	[VHS PB] 420 mVp-p	[REC] S-VHS: 0.7 Vp-p VHS: 0.4 Vp-p	[S-VHS PB] 300 mVp-p	[VHS PB] 170 mVp-p	4.7 Vp-p/15.63 kHz	[VIDEO INSERT] UPPER: TP13 LOWER: TP12

- DC voltage (1/2) - (R/P ADJUST)

SYMBOL No.		REC	PB	SYMBOL No.		REC	PB	SYMBOL No.		REC	PB	SYMBOL No.		REC	PB
INTEGRATED CIRCUIT				IC14	1	1.9	1.9	IC18	1	5.9	5.9	IC24	10	5.1	5.1
IC1	1	11.9	11.9		2	2.5	2.9		2	5.9	5.9		11	5.1	5.1
	2	0.0	0.0		3	0.0	5.0		3	5.9	0.0		12	0.0	0.0
	3	14.7	14.7		4	5.0	0.2		4	5.9	5.9		13	0.0	5.1
IC2	1	8.7	8.7		5	2.5	0.0		5	5.9	5.9		14	5.1	5.1
	2	0.0	0.0		6	2.6	5.0		6	0.0	10.0	IC25	1	0.0	0.0
	3	14.7	14.7		7	0.0	0.0		7	0.0	0.0		2	3.8	3.8
IC3	1	5.0	5.0		8	5.0	0.0		8	0.0	0.0		3	3.5	3.5
	2	0.0	0.0		9	1.1	5.0		9	11.9	11.9		4	11.9	11.9
	3	8.0	8.0		10	0.0	5.0		10	5.0	4.9		5	0.3	0.3
IC4	1	5.0	5.0		11	5.0	1.1		11	5.9	5.9		6	0.0	0.0
	2	0.0	0.0		12	5.0	0.0		12	5.9	5.9		7	1.3	1.3
	3	8.0	8.0		13	0.0	5.0		13	5.9	0.0		8	5.8	5.8
IC5	1	11.9	11.9		14	5.0	5.0		14	5.9	5.9		9	3.3	3.3
	2	0.0	0.0	IC15	1	0.0	5.0		15	5.9	5.9		10	5.8	5.8
	3	14.7	14.7		2	5.0	0.0		16	11.9	11.9	IC26	1	0.0	0.0
IC6	1	11.8	11.8		3	2.1	2.1	IC20	1	6.2	6.2		2	0.0	3.8
	2	0.0	0.0		4	5.0	1.1		2	11.8	11.8		3	0.0	3.5
	3	14.7	14.7		5	5.0	0.0		3	2.7	2.7		4	11.9	11.9
IC7	1	5.0	5.1		6	1.1	5.0		4	0.0	0.0		5	0.3	0.3
	2	0.0	0.0		7	0.0	0.0	IC21	1	11.8	11.8		6	0.0	0.0
	3	8.0	8.0		8	0.0	0.0		2	7.5	7.5		7	1.3	1.3
IC8	1	8.7	8.7		9	0.0	0.0		3	4.6	4.6		8	5.7	5.7
	2	0.0	0.0		10	0.0	0.0		4	0.0	0.0		9	3.3	3.3
	3	14.7	14.7		11	0.0	0.0		5	8.2	8.3		10	5.7	5.7
IC9	1	11.8	11.9		12	0.0	0.0		6	0.0	0.0	IC27	1	6.4	6.4
	2	0.0	0.0		13	5.0	5.0		7	8.3	8.3		2	11.9	11.9
	3	14.7	14.7		14	5.0	5.0	IC22	1	10.1	10.1		3	2.7	2.7
IC11	1	11.9	11.9	IC16	1	2.6	2.3		2	10.1	10.1		4	0.0	0.0
	2	3.6	0.0		2	0.0	5.0		3	10.1	10.1	IC28	1	6.4	6.4
	3	3.6	3.6		3	0.0	5.0		4	10.1	10.1		2	11.8	11.8
	4	9.9	9.9		4	0.0	5.0		5	10.1	10.1		3	2.7	2.7
	5	2.9	2.8		5	2.3	5.0		6	0.0	0.0		4	0.0	0.0
	6	3.0	2.7		6	0.0	5.0		7	0.0	0.0	IC29	1	6.0	6.0
	7	0.0	0.0		7	0.0	0.0		8	0.0	0.0		2	11.8	11.8
	8	1.1	1.1		8	5.0	0.0		9	6.6	6.6		3	2.7	2.7
IC12	1	11.9	11.9		9	0.0	0.0		10	6.6	6.6		4	0.0	0.0
	2	3.5	3.5		10	2.5	0.0		11	11.9	0.0	(R/P SUB1 PWB)			
	3	3.5	3.5		11	5.0	0.0		12	8.9	8.9	IC19	1	8.3	8.3
	4	7.8	7.8		12	5.0	5.0		13	8.9	8.9		2	0.0	8.6
	5	2.8	2.8		13	2.3	2.5		14	8.9	8.9		3	8.3	8.3
	6	2.9	2.7		14	5.0	5.0		15	10.1	10.1		4	0.0	0.0
	7	0.0	0.0	IC17	1	2.9	2.5		16	11.8	11.8		5	0.0	0.0
	8	1.1	1.1		2	0.0	0.0	IC23	1	3.5	3.5		6	8.3	8.3
IC13	1	4.1	4.1		3	1.0	0.1		2	0.0	0.0		7	0.0	8.1
	2	4.1	4.1		4	3.9	3.9		3	4.0	3.8		8	7.5	7.5
	3	4.1	4.1		5	3.8	3.8		4	0.0	0.0		9	11.9	11.9
	4	4.1	4.1		6	0.0	0.0		5	0.0	0.0	IC30	1	6.6	6.3
	5	4.1	4.1		7	0.0	0.0		6	4.2	4.2		2	11.9	11.9
	6	0.0	0.0		8	0.0	0.0		7	3.3	3.3		3	0.0	0.0
	7	0.0	0.0		9	0.0	0.0		8	5.0	5.1		4	0.0	2.7
	8	0.0	0.0		10	0.0	0.0		9	2.3	2.3				
	9	6.0	6.7		11	0.0	0.0	IC24	1	5.0	0.7				
	10	6.0	6.7		12	0.0	0.0		2	5.0	0.7				
	11	11.9	11.9		13	0.0	0.0		3	0.0	5.0				
	12	7.1	7.1		14	3.2	3.2		4	0.6	0.6				
	13	9.3	9.3		15	0.0	0.0		5	5.0	0.7				
	14	9.3	9.3		16	2.3	2.2		6	5.1	5.1				
	15	4.2	4.1		17	3.2	3.2		7	0.0	0.0				
	16	11.9	11.9		18	5.1	5.1		8	0.2	0.2				
									9	5.1	5.1				

- DC voltage (2/2) - (R/P ADJUST)

SYMBOL No.		REC	PB	SYMBOL No.		REC	PB	SYMBOL No.		REC	PB	SYMBOL No.		REC	PB
TRANSISTOR				Q21	B	2.3	0.1	Q44	B	10.1	10.1	Q64	G	4.6	4.6
Q1	B	5.8	5.8		C	0.0	−0.1		C	11.8	11.8		D	0.0	0.1
	C	11.9	11.9		E	0.0	0.0		E	9.5	9.5		S	0.0	0.0
	E	5.4	5.2	Q22	B	1.9	0.2	Q45	B	9.5	9.5	Q65	G	0.0	0.0
Q2	B	3.1	3.1		C	0.0	0.1		C	11.8	11.8		D	4.6	4.6
	C	9.0	9.0		E	0.0	0.0		E	8.9	8.9		S	0.0	0.0
	E	2.5	2.5	Q23	G	0.7	0.7	Q46	B	10.1	10.1	**CONNECTOR**			
Q3	G	4.7	4.7		D	11.9	11.9		C	11.8	11.8	CN1	1AB	0.0	0.0
	D	0.0	0.0		S	0.0	0.0		E	9.5	9.5		2AB	0.0	0.0
	S	0.0	0.0	Q24	G	3.4	3.2	Q47	B	10.1	10.1		3AB	8.0	8.0
Q4	G	4.7	4.7		D	5.1	5.9		C	11.8	11.8		4AB	14.7	14.7
	D	0.0	0.0		S	0.0	0.0		E	9.5	9.5		5A	6.0	6.0
	S	0.0	0.0	Q25	B	5.9	0.0	Q48	B	9.5	9.5		5 B	14.7	0.0
Q5	B	0.0	0.0		C	11.9	11.9		C	11.8	11.8		6A	5.0	0.2
	C	0.0	0.0		E	5.3	1.8		E	8.9	8.9		6 B	0.2	0.2
	E	0.0	0.0	Q27	B	5.0	0.0	Q49	B	8.9	8.9		7A	4.8	0.6
Q6	B	4.1	4.1		C	0.0	8.7		C	11.8	11.8		7 B	0.6	4.8
	C	11.9	11.9		E	0.0	0.0		E	8.3	8.2		8A	0.0	0.0
	E	3.6	3.5	Q28	B	6.6	6.3	Q50	G	4.0	3.9		8 B	0.6	4.5
Q7	B	9.9	9.9		C	0.0	0.0		D	0.0	0.0		9A	0.0	0.0
	C	11.9	11.9		E	6.2	7.0		S	0.0	0.0		9 B	0.0	0.0
	E	9.3	9.3	Q29	B	4.1	4.1	Q51	G	6.6	6.6		10A	0.0	0.0
Q8	B	5.9	5.9		C	11.8	11.8		D	0.0	0.0		10 B	0.0	0.0
	C	11.9	11.9		E	3.5	3.5		S	0.0	0.0		11A	14.7	14.7
	E	5.5	5.3	Q30	B	1.7	1.7	Q52	G	0.0	0.0		11 B	0.0	0.0
Q9	B	3.1	3.1		C	0.0	0.0		D	4.5	4.4		12A	3.6	3.6
	C	5.0	5.0		E	2.4	2.4		S	0.0	0.0		12 B	0.0	0.0
	E	2.5	2.5	Q31	G	1.1	4.7	Q53	G	4.4	0.7		13A	3.6	3.6
Q10	B	4.1	4.1		D	0.7	0.0		D	0.0	4.6		13 B	0.0	0.0
	C	11.9	11.9		S	0.0	0.0		S	0.0	0.0		14A	1.9	1.9
	E	3.5	3.5	Q32	B	0.7	0.0	Q54	G	0.0	4.6		14 B	0.0	0.0
Q11	B	7.8	7.8		C	0.0	0.0		D	0.0	0.1		15A	0.2	4.8
	C	11.9	11.9		E	0.0	0.0		S	0.0	0.0		15 B	0.0	0.0
	E	7.1	7.1	Q33	B	1.2	1.2	Q55	G	4.7	0.0		16A	8.7	8.7
Q12	B	9.3	9.3		C	5.7	5.8		D	0.2	4.5		16 B	0.0	0.0
	C	11.9	11.9		E	0.6	0.6		S	0.0	0.0		17A	4.4	4.4
	E	8.8	8.7	Q34	B	5.7	5.8	Q56	G	4.7	4.7		17 B	4.4	4.4
Q13	B	4.1	4.1		C	11.8	11.8		D	0.0	0.4		18A	5.1	5.1
	C	11.9	11.9		E	5.1	5.2		S	0.0	0.0		18 B	0.0	0.0
	E	3.6	3.6	Q36	B	3.1	3.1	Q57	G	4.4	0.7		19A	4.6	4.6
Q14	B	4.1	4.1		C	9.4	9.4		D	0.0	0.4		20A	2.2	2.5
	C	11.9	11.9		E	2.5	2.5		S	0.0	0.0		20 B	0.0	0.0
	E	3.5	3.5	Q37	B	2.5	2.5	Q58	G	3.8	3.8		22A	6.9	6.9
Q15	G	4.6	4.6		C	10.8	10.8		D	0.0	0.0		22 B	0.0	0.0
	D	0.0	0.0		E	1.9	1.9		S	0.0	0.0		24A	0.0	0.0
	S	0.0	0.0	Q38	B	10.8	10.8	Q59	G	3.8	3.8		24 B	0.0	0.0
Q16	B	0.0	0.0		C	11.8	11.8		D	0.0	0.0		26A	0.0	0.0
	C	8.7	8.7		E	10.1	10.1		S	0.0	0.0		26 B	0.0	0.0
	E	0.0	0.0	Q40	B	3.1	3.1	Q60	B	5.9	5.9		27A	5.4	5.3
Q17	B	0.0	0.0		C	9.3	9.4		C	11.9	11.9		27 B	0.0	0.0
	C	0.0	0.0		E	2.5	2.5		E	5.4	5.3		28A	4.7	4.7
	E	0.6	0.6	Q41	B	2.5	2.5	Q61	B	14.7	0.0		28 B	0.0	0.0
Q18	B	5.0	5.0		C	10.8	10.8		C	0.0	10.0		30A	8.3	8.3
	C	0.1	0.1		E	1.9	1.8		E	0.0	0.0		30 B	0.0	0.0
	E	5.0	5.0	Q42	B	10.8	10.8	Q62	B	6.6	6.3		32A	3.6	4.0
Q19	B	2.4	2.7		C	11.8	11.8		C	11.9	11.9		32 B	0.0	0.0
	C	2.2	0.1		E	10.1	10.2		E	6.4	5.7				
	E	0.0	0.0	Q43	B	10.1	10.1	Q63	G	0.0	0.0				
Q20	B	2.4	0.1		C	11.8	11.8		D	4.6	4.6				
	C	2.0	0.2		E	9.5	9.5		S	0.0	0.0				
	E	0.0	0.0												

4.36 Y COMB SCHEMATIC DIAGRAM

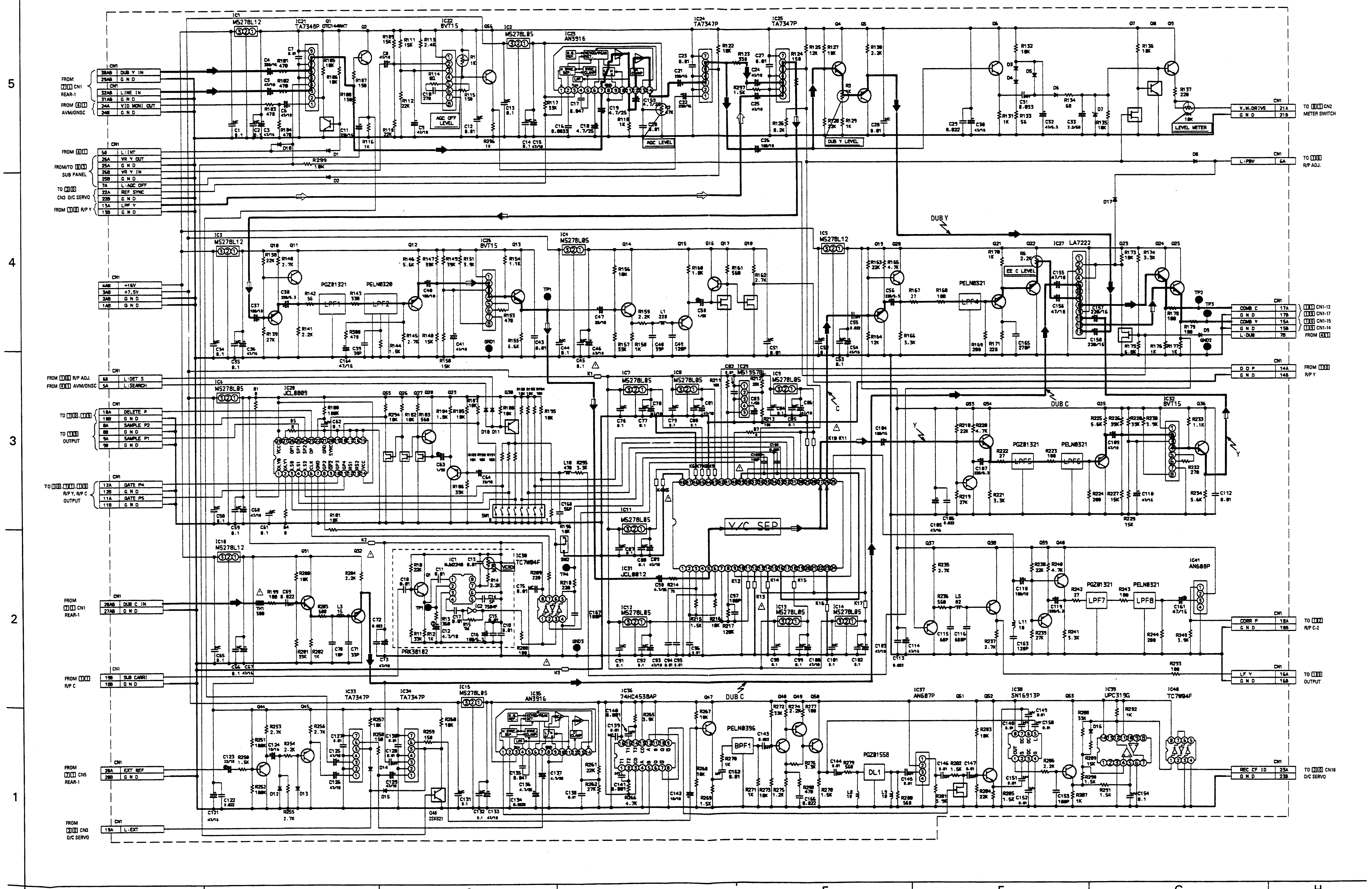

FROM 7 CN1 REAR-1
DUB Y IN
LINE IN
VID MONI OUT
FROM AVM/ONSC
L:INT
VR Y OUT
VR Y IN
L:AGC OFF
REF SYNC
LPF Y
FROM/TO SUB PANEL
TO CN3 D/C SERVO
FROM R/P Y
M5278L12
TA7348P
8VT15
M5278L05
AN3916
TA7347P
AGC OFF LEVEL
AGC LEVEL
DUB Y LEVEL
LEVEL METER
V.M.DRIVE
TO CN2 METER SWITCH
L:PBV
TO R/P ADJ.
DUB Y
+16V
+7.5V
PGZ01321
PELN0320
LPF1
LPF2
LA7222
EE C LEVEL
PELN0321
LPF4
COMB C
COMB Y
L:DUB
TP1
TP2
TP3
GND1
GND2
GND3
L:DET S
L:SEARCH
DOP
FROM R/P Y
JCL0009
DELETE P
SAMPLE P2
SAMPLE P1
GATE P4
GATE P5
R/P Y, R/P C OUTPUT
M51957B
Y/C SEP
JCL0012
DUB C
LPF5
LPF6
AN608P
LPF7
LPF8
CORR P
TO R/P C-2
DUB C IN
FROM CN1 REAR-1
PRK30102
TC7W04F
VCXO
SUB CARRI
FROM R/P C
LF Y
TO OUTPUT
EXT REF
FROM CN5 REAR-1
L:EXT
FROM CN3 D/C SERVO
74HC4538AP
AN6087P
SN16913P
UPC319G
TC7W04F
PELN0396
BPF1
PGZ01558
DL1
REC CF ID
TO CN18 D/C SERVO
2SK621
1
2
3
4
5
6
A
B
C
D
E
F
G
H

- DC voltage (1/2) - (Y COMB)

SYMBOL No.		REC	PB	SYMBOL No.		REC	PB	SYMBOL No.		REC	PB	SYMBOL No.		REC	PB
INTEGRATED CIRCUIT				IC22	1	11.8	11.8	IC28	6	1.5	1.6	IC31	26	4.6	4.6
IC1	1	11.8	11.8		2	6.7	6.7		7	0.0	0.0		27	4.5	4.5
	2	0.0	0.0		3	6.7	6.7		8	4.8	4.8		28	5.0	5.0
	3	14.7	14.7		4	8.7	8.6		9	0.3	0.3		29	0.0	0.0
IC2	1	5.0	5.0		5	6.0	6.0		10	0.0	0.0		30	5.0	5.0
	2	0.0	0.0		6	6.0	6.0		11	0.0	0.0		31	0.0	0.0
	3	7.9	7.9		7	0.0	0.0		12	P	P		32	0.0	0.0
IC3	1	12.1	12.1		8	1.6	1.6		13	P	P		33	5.0	5.0
	2	0.0	0.0	IC23	1	4.0	4.0		14	5.0	5.0		34	5.0	5.0
	3	14.7	14.7		2	2.9	2.9		15	0.0	0.0		35	1.6	1.6
IC4	1	5.0	5.0		3	5.0	5.0		16	0.0	0.0		36	4.4	0.7
	2	0.0	0.0		4	1.9	1.9		17	0.0	0.0		37	0.3	0.3
	3	7.9	7.9		5	1.6	1.6		18	0.0	0.0		38	5.0	5.0
IC5	1	11.8	11.8		6	2.8	2.1		19	0.0	0.0		39	0.0	0.0
	2	0.0	0.0		7	2.8	2.9		20	0.2	0.2		40	5.0	5.0
	3	14.7	14.7		8	0.0	0.0		21	0.0	0.0		41	5.0	5.0
IC6	1	5.0	5.0		9	2.9	2.9		22	5.0	5.0		42	0.0	0.0
	2	0.0	0.0		10	0.0	0.0		23	0.0	0.0		43	5.0	5.0
	3	7.9	7.9		11	2.6	2.6		24	0.0	0.0		44	0.0	0.0
IC7	1	5.0	5.0		12	3.1	3.1		25	0.0	0.0		45	5.0	5.0
	2	0.0	0.0		13	2.8	2.8		26	0.3	0.3		46	0.0	0.0
	3	7.9	7.9		14	2.2	2.2		27	0.0	0.0		47	5.0	5.0
IC8	1	5.0	5.0	IC24	1	8.3	8.3		28	5.0	5.0		48	0.0	0.0
	2	0.0	0.0		2	0.0	0.0	IC29	1	5.0	5.0	IC32	1	11.8	11.8
	3	7.9	7.9		3	8.2	8.2		2	1.6	1.6		2	3.1	3.1
IC9	1	5.1	5.0		4	0.0	0.0		3	0.0	0.0		3	3.1	3.1
	2	0.0	0.0		5	9.3	9.3		4	1.2	1.2		4	9.1	9.1
	3	7.9	7.9		6	7.4	7.4		5	5.0	5.0		5	2.4	2.4
IC10	1	11.8	11.8		7	11.8	11.8	IC30	1	1.1	1.1		6	2.4	2.4
	2	0.0	0.0	IC25	1	8.2	8.2		2	0.3	0.3		7	0.0	0.0
	3	14.7	14.7		2	0.0	0.0		3	1.1	1.1		8	1.3	1.3
IC11	1	5.1	5.1		3	8.2	8.3		4	0.0	0.0	IC33	1	8.3	8.3
	2	0.0	0.0		4	0.0	0.0		5	-0.7	-0.7		2	0.0	0.0
	3	7.9	7.9		5	4.4	0.7		6	4.7	4.8		3	8.3	8.3
IC12	1	5.0	5.0		6	7.5	7.4		7	-0.8	-0.9		4	0.0	0.0
	2	0.0	0.0		7	11.8	11.8		8	5.0	5.0		5	9.3	9.3
	3	7.9	7.9	IC26	1	12.1	12.1	IC31	1	0.0	0.0		6	7.5	7.5
IC13	1	5.0	5.1		2	3.2	3.2		2	0.7	0.7		7	11.8	11.8
	2	0.0	0.0		3	3.2	3.2		3	0.5	0.5	IC34	1	8.3	8.3
	3	7.9	7.9		4	8.9	8.9		4	0.0	0.0		2	0.0	0.0
IC14	1	5.0	5.0		5	2.5	2.5		5	1.4	1.5		3	8.3	8.3
	2	0.0	0.0		6	2.5	2.5		6	2.6	2.6		4	0.0	0.0
	3	7.9	7.9		7	0.0	0.0		7	5.0	5.0		5	0.0	0.0
IC15	1	5.0	5.0		8	1.3	1.3		8	3.6	3.6		6	7.5	7.5
	2	0.0	0.0	IC27	1	0.0	0.0		9	4.6	4.7		7	11.8	11.8
	3	7.9	7.9		2	0.0	0.0		10	0.0	0.0	IC35	1	4.1	4.1
IC21	1	8.2	8.2		3	0.0	0.0		11	5.0	5.0		2	3.0	3.0
	2	0.0	0.0		4	0.0	0.0		12	0.0	0.0		3	5.0	5.0
	3	8.2	8.2		5	7.9	7.9		13	5.0	5.0		4	1.9	1.9
	4	5.2	5.2		6	0.0	0.0		14	0.0	0.0		5	1.6	1.6
	5	0.0	0.0		7	7.8	7.8		15	0.0	0.0		6	2.2	2.2
	6	8.3	8.2		8	7.1	7.1		16	0.0	0.0		7	2.9	2.9
	7	0.0	0.0		9	11.8	11.8		17	0.0	0.0		8	0.0	0.0
	8	7.5	7.5		10	7.8	7.8		18	5.0	5.0		9	2.9	2.9
	9	11.8	11.8		11	7.1	7.1		19	0.0	0.0		10	0.0	0.0
					12	7.8	7.8		20	0.0	0.0		11	2.7	2.7
				IC28	1	5.0	5.0		21	5.0	5.0		12	3.0	3.0
					2	0.0	0.0		22	0.0	0.0		13	2.8	2.8
					3	5.0	5.0		23	0.0	0.0		14	1.6	1.6
					4	0.0	0.0		24	0.0	0.0				
					5	0.0	0.0		25	4.6	4.6				

- DC voltage (2/2) - (Y COMB)

SYMBOL No.		REC	PB	SYMBOL No.		REC	PB	SYMBOL No.		REC	PB	SYMBOL No.		REC	PB	SYMBOL No.		REC	PB
IC36	1	0.0	0.0	(4FSC PWB)				Q19	B	4.1	4.1	Q39	B	6.0	6.0	**CONNECTOR**			
	2	4.7	4.7	IC1	1	2.6	2.6		C	0.0	0.0		C	0.0	0.0	CN1	1AB	0.0	0.0
	3	5.0	5.0		2	2.0	2.0		E	4.7	4.7		E	6.6	6.6		2AB	0.0	0.0
	4	0.0	0.0		3	0.0	0.0	Q20	B	4.1	4.1	Q40	B	6.0	6.0		3AB	7.9	7.9
	5	4.1	4.1		4	3.2	3.2		C	11.8	11.8		C	11.8	11.8		4AB	14.7	14.7
	6	0.3	0.3		5	5.0	5.0		E	3.4	3.5		E	5.4	5.4		5A	6.0	6.0
	7	4.7	4.7		6	5.0	5.0	Q21	B	1.7	1.7	Q44	B	6.4	6.4		5 B	9.6	9.6
	8	0.0	0.0		7	3.6	3.6		C	7.1	7.1		C	0.0	0.0		6A	5.0	0.2
	9	4.8	4.8		8	0.0	0.0		E	1.1	1.1		E	7.0	7.0		6 B	0.2	0.2
	10	0.3	0.3	**TRANSISTOR**				Q22	B	7.1	7.0	Q45	B	0.1	0.1		7A	9.0	9.0
	11	5.0	5.0	Q1	B	9.8	9.8		C	0.0	0.0		C	0.0	0.0		7 B	5.0	5.0
	12	4.7	4.7		C	0.0	0.0		E	7.6	7.7		E	0.8	0.8		8A	0.0	0.0
	13	5.0	5.0		E	0.0	0.0	Q23	G	5.2	5.2	Q46	B	5.2	5.2		8 B	0.0	0.0
	14	4.7	4.7	Q2	B	7.4	7.5		D	0.0	0.0		C	0.0	0.0		9A	0.0	0.0
	15	0.0	0.0		C	11.8	11.8		S	0.0	0.0		E	0.0	0.0		9 B	0.0	0.0
	16	5.0	5.0		E	6.8	6.8	Q24	B	7.1	7.1	Q47	B	2.5	2.5		10A	0.0	0.0
IC37	1	3.0	3.0	Q4	B	6.2	6.2		C	11.8	11.8		C	5.0	5.0		10 B	0.0	0.0
	2	5.0	5.0		C	11.8	11.8		E	6.5	6.5		E	1.9	1.9		11A	0.0	0.0
	3	1.7	1.7		E	5.8	5.7	Q25	B	7.1	7.1	Q48	B	0.0	0.0		11 B	0.0	0.0
	4	0.0	0.0	Q5	B	3.3	3.3		C	11.8	11.8		C	4.3	4.3		12A	0.0	0.0
IC38	1	4.2	4.2		C	0.0	0.0		E	6.5	6.5		E	1.0	1.0		12 B	0.0	0.0
	2	2.5	2.5		E	3.8	3.8	Q26	G	1.2	1.0	Q49	B	4.3	4.3		13A	4.6	4.6
	3	1.8	1.8	Q6	B	6.2	6.2		D	4.1	4.1		C	2.7	2.7		13 B	0.0	0.0
	4	0.0	0.0		C	11.8	11.8		S	0.0	0.0		E	4.9	4.9		14A	0.0	0.0
	5	1.8	1.8		E	5.7	5.6	Q27	G	3.4	3.4	Q50	B	2.7	2.7		14 B	0.0	0.0
	6	2.5	2.5	Q7	G	4.4	0.7		D	1.2	1.0		C	5.0	5.0		15A	6.5	6.5
	7	2.5	2.5		D	0.0	9.7		S	0.0	0.0		E	2.2	2.2		15 B	0.0	0.0
	8	5.0	5.0		S	0.0	0.0	Q28	B	1.2	1.0	Q51	G	4.8	4.8		16A	6.1	6.1
IC39	1	0.0	0.0	Q8	B	0.0	9.7		C	5.0	5.0		D	0.0	0.0		16 B	0.0	0.0
	2	0.0	0.0		C	1.5	0.0		E	3.4	3.4		S	0.0	0.0		17A	6.5	6.5
	3	0.0	0.0		E	0.0	0.0	Q29	B	3.8	3.8	Q52	B	3.4	3.4		17 B	0.0	0.0
	4	3.6	3.6	Q9	B	1.5	0.0		C	0.0	0.0		C	5.0	5.0		18A	7.0	7.0
	5	3.6	3.6		C	11.8	11.8		E	4.4	4.4		E	2.8	2.8		18 B	0.0	0.0
	6	0.0	0.0		E	0.9	0.1	Q30	B	0.7	0.7	Q53	B	4.2	4.2		19A	9.1	9.1
	7	3.8	3.8	Q10	B	6.5	6.5		C	5.0	5.0		C	5.0	5.0		19 B	2.3	2.3
	8	4.2	4.2		C	0.0	0.0		E	5.0	5.0		E	3.6	3.6		20A	0.0	0.0
	9	0.1	0.0		E	7.1	7.1	Q31	B	8.8	8.8	Q55	G	4.1	4.1		20 B	0.0	0.0
	10	0.1	0.1	Q11	B	6.5	6.5		C	11.8	11.9		D	0.2	0.2		21A	0.2	0.1
	11	5.0	5.0		C	12.0	12.1		E	8.1	8.1		S	0.0	0.0		21 B	0.0	0.0
	12	2.7	2.7		E	5.9	5.8	Q32	B	8.2	8.2	Q56	B	8.7	8.6		22A	4.0	4.0
	13	0.0	0.0	Q12	B	4.6	4.6		C	0.0	0.0		C	11.8	11.8		22 B	0.0	0.0
	14	5.0	5.0		C	0.0	0.0		E	8.8	8.8		E	8.1	8.1		23A	2.6	2.6
IC40	1	2.7	2.7		E	5.2	5.3	Q33	B	6.1	6.1						23 B	0.0	0.0
	2	2.6	2.6	Q13	B	8.9	8.9		C	0.0	0.0						24A	0.0	0.0
	3	0.0	0.0		C	12.1	12.1		E	6.7	6.7						24 B	0.0	0.0
	4	0.0	0.0		E	8.4	8.3	Q34	B	6.1	6.1						25A	0.0	0.0
	5	5.0	5.0	Q14	B	3.8	3.8		C	11.8	11.8						25 B	0.0	0.0
	6	2.4	2.4		C	5.0	5.1		E	5.5	5.5						26A	0.0	0.0
	7	2.4	2.4		E	3.2	3.1	Q35	B	2.7	2.7						26 B	0.0	0.0
	8	5.0	5.0	Q15	B	3.1	3.1		C	0.0	0.0						27AB	0.0	0.0
IC41	1	7.0	7.0		C	0.0	0.0		E	3.3	3.3						28AB	0.0	0.0
	2	11.8	11.8		E	3.7	3.7	Q36	B	9.1	9.1						29AB	0.0	0.0
	3	2.7	2.7	Q16	B	0.6	0.6		C	11.8	11.8						30AB	0.0	0.0
	4	0.0	0.0		C	5.1	5.1		E	8.5	8.5						31AB	0.0	0.0
					E	3.5	3.6	Q37	B	6.1	6.1						32AB	0.2	0.2
				Q17	G	3.5	3.6		C	0.0	0.0								
					D	0.6	0.6		E	6.8	6.7								
					S	0.0	0.0	Q38	B	6.7	6.7								
				Q18	G	0.6	0.6		C	11.8	11.8								
					D	4.6	4.7		E	6.1	6.1								
					S	0.0	0.0												

4.37 Y COMB CIRCUIT BOARD

— Y COMB —

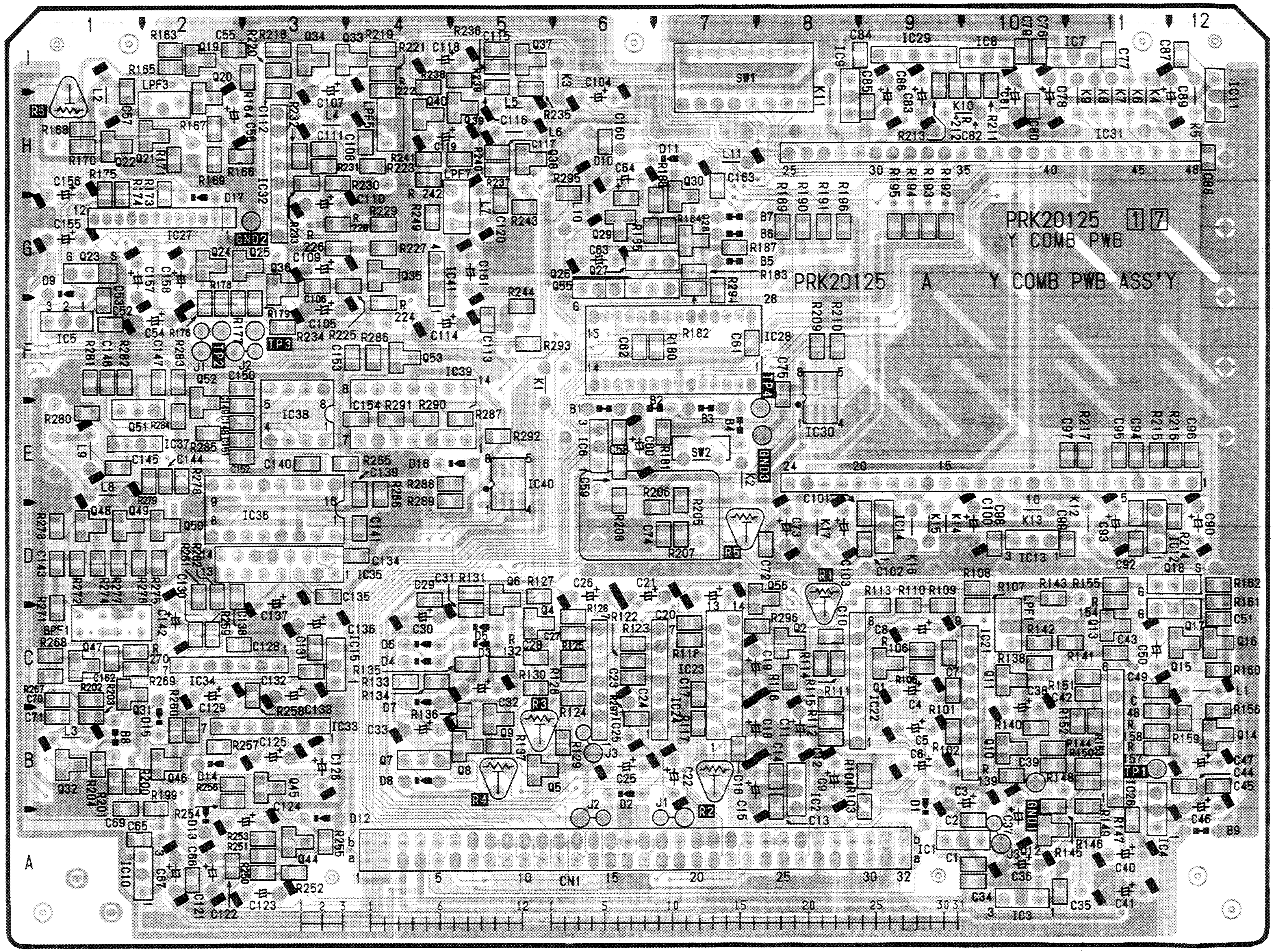
PRK20125 17
Y COMB PWB
PRK20125 A Y COMB PWB ASS'Y
SW1
SW2
IC1
IC2
IC3
IC4
IC5
IC6
IC7
IC8
IC9
IC10
IC11
IC12
IC13
IC14
IC21
IC22
IC23
IC24
IC25
IC26
IC27
IC28
IC29
IC30
IC31
IC32
IC33
IC34
IC35
IC36
IC37
IC38
IC39
IC40
IC41
CN1
TP1
TP2
TP3
TP4
GND1
GND2
GND3
R1
R2
R3
R4
R5
R6
LPF1
LPF3
LPF5
LPF7
BPF1
J1
J2
J3
K1
K2
K3
K10
K11
K13
K16
K17
L1
L2
L3
L4
L5
L6
L7
L8
L9
L10
L11

— 4 fsc —

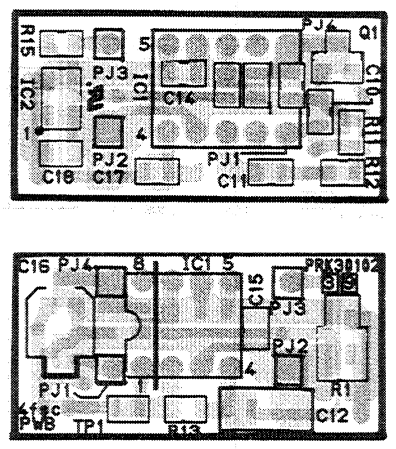
R15
IC2
IC1
PJ1
PJ2
PJ3
PJ4
Q1
C10
C11
C12
C14
C15
C16
C17
R11
R12
R13
R1
IC1
PRK30182 8 9
4fsc PWB
TP1

— MAIN WAVEFORMS OF Y COMB CIRCUIT —

TP1			TP2	TP3			TP4
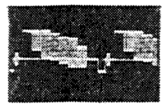	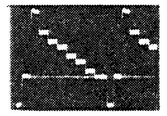	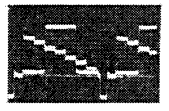	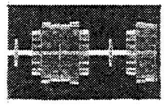	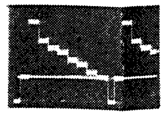	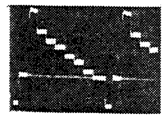	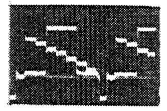	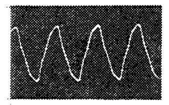
[REC] 1.4 VP-P	[S-VHS PB]	[VHS PB]	[REC] 200 mVp-p : Burst level	[REC] 1.0 Vp-p	[S-VHS PB]	[VHS PB]	7.4 VP-P/17.5 MHz
	1.7 VP-P				1.2 VP-P		

4.38 OUTPUT SCHEMATIC DIAGRAM

— DIAGRAM (1/2) —

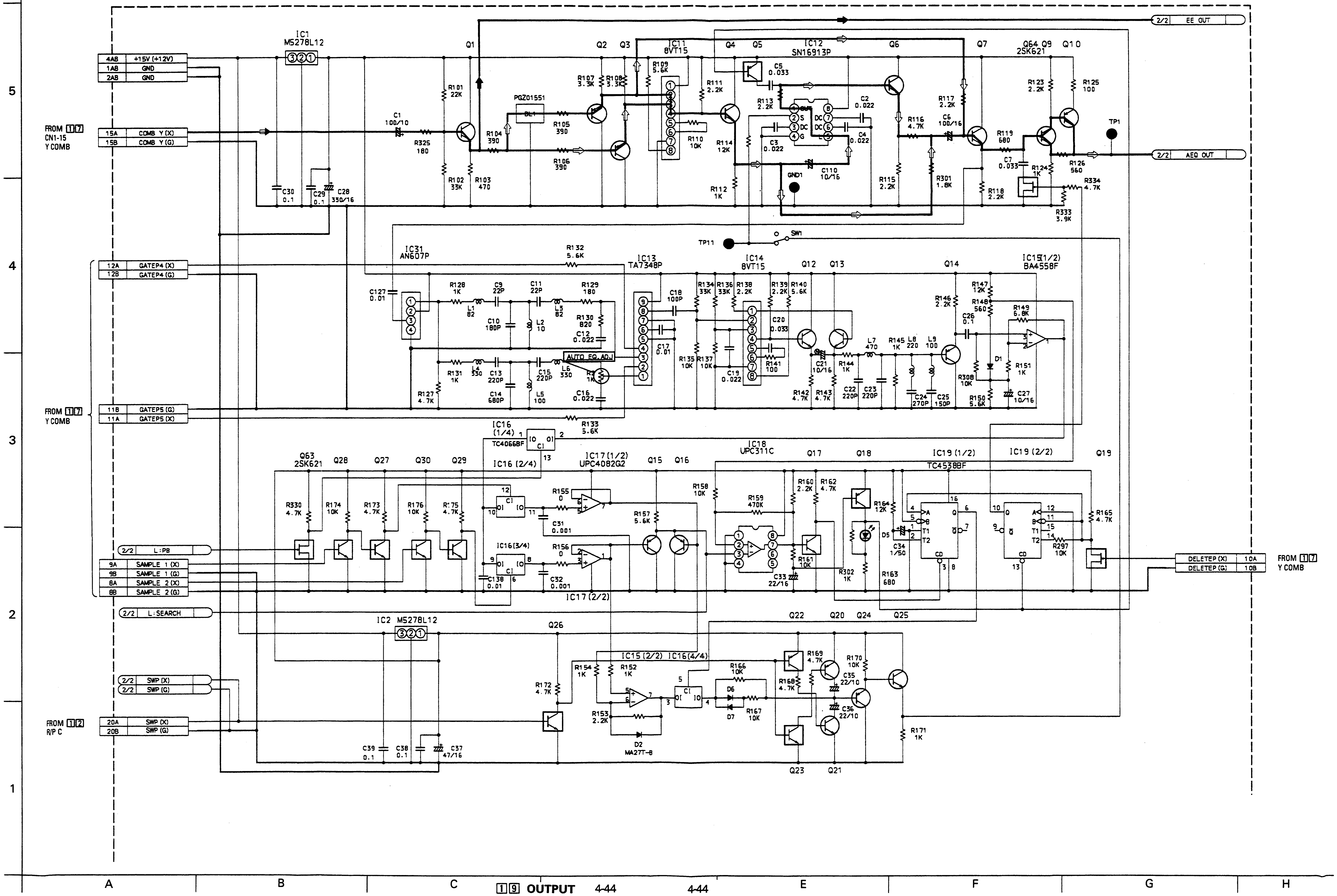

6
5
4
3
2
1
A
B
C
E
F
G
H
FROM 17 CN1-15 Y COMB
FROM 17 Y COMB
FROM 12 R/P C
FROM 17 Y COMB
4AB +15V (+12V)
1AB GND
2AB GND
15A COMB Y (X)
15B COMB Y (G)
12A GATEP4 (X)
12B GATEP4 (G)
11B GATEP5 (G)
11A GATEP5 (X)
2/2 L:PB
9A SAMPLE 1 (X)
9B SAMPLE 1 (G)
8A SAMPLE 2 (X)
8B SAMPLE 2 (G)
2/2 L:SEARCH
2/2 SWP (X)
2/2 SWP (G)
20A SWP (X)
20B SWP (G)
2/2 EE OUT
2/2 AEQ OUT
DELETEP (X) 10A
DELETEP (G) 10B
IC1 M5278L12
IC2 M5278L12
IC11 8VT15
IC12 SN16913P
IC13 TA7348P
IC14 8VT15
IC15(1/2) BA4558F
IC15(2/2)
IC16(4/4)
IC16 (1/4) TC4066BF
IC16 (2/4)
IC16(3/4)
IC17(1/2) UPC4082G2
IC17(2/2)
IC18 UPC311C
IC19 (1/2)
IC19 (2/2)
TC4538BF
IC31 AN607P
PGZ01551
DL1
Q1
Q2
Q3
Q4
Q5
Q6
Q7
Q64 Q9 2SK621
Q10
Q12
Q13
Q14
Q63 2SK621
Q28
Q27
Q30
Q29
Q15
Q16
Q17
Q18
Q19
Q22
Q20
Q24
Q25
Q26
Q23
Q21
TP1
TP11
GND1
SW1
AUTO EQ. ADJ
D1
D2 MA27T-B
D5
D6
D7

— DIAGRAM (2/2) —

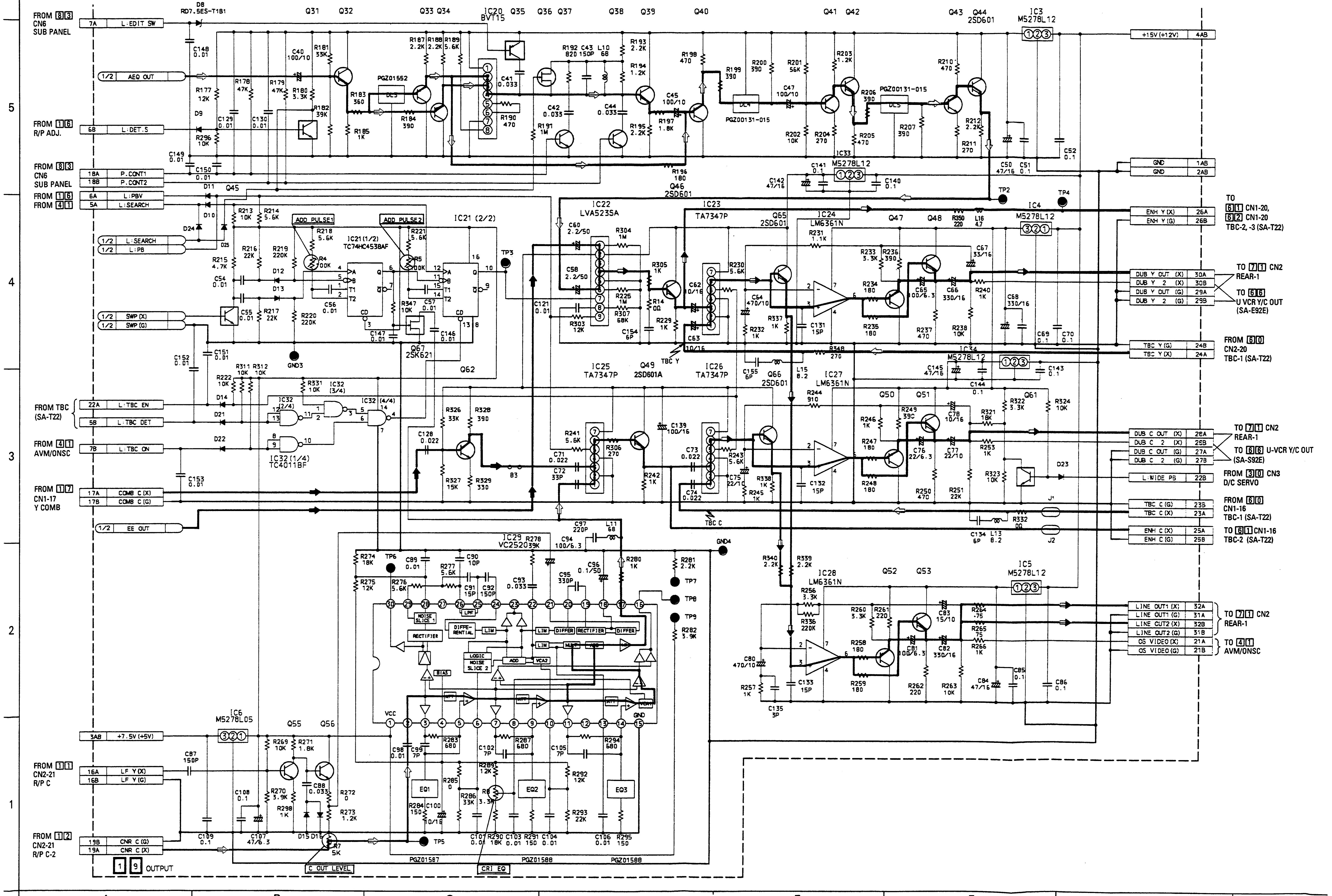

FROM 83 CN6 SUB PANEL
7A L:EDIT SW
1/2 AEQ OUT
FROM 16 R/P ADJ.
6B L:DET.S
FROM 83 CN6 SUB PANEL
18A P.CONT1
18B P.CONT2
FROM 16
FROM 41
6A L:PBV
5A L:SEARCH
1/2 L:SEARCH
1/2 L:PB
1/2 SWP (X)
1/2 SWP (G)
FROM TBC (SA-T22)
22A L:TBC EN
5B L:TBC DET
FROM 41 AVM/ONSC
7B L:TBC ON
FROM 17 CN1-17 Y COMB
17A COMB C (X)
17B COMB C (G)
1/2 EE OUT
3AB +7.5V (+5V)
FROM 11 CN2-21 R/P C
16A LF Y (X)
16B LF Y (G)
FROM 12 CN2-21 R/P C-2
19B CNR C (G)
19A CNR C (X)
19 OUTPUT
D8 RD7.5ES-T1B1
Q31 Q32 Q33 Q34
IC20 BVT15
Q35 Q36 Q37 Q38 Q39 Q40 Q41 Q42 Q43
Q44 2SD601
IC3 M5278L12
PGZ01552
PGZ00131-015
IC33 M5278L12
Q45
Q46 2SD601
IC22 LVA523SA
IC23 TA7347P
Q65 2SD601
IC24 LM6361N
Q47 Q48
IC4 M5278L12
ADD PULSE1
ADD PULSE2
IC21 (1/2) TC74HC4538AF
IC21 (2/2)
Q67 2SK621
Q62
IC32 (1/4) TC4011BF
IC32 (2/4)
IC32 (3/4)
IC32 (4/4)
IC25 TA7347P
Q49 2SD601A
IC26 TA7347P
Q66 2SD601
IC27 LM6361N
Q50 Q51 Q61
IC34 M5278L12
IC29 VC252039K
NOISE SLICE 1
DIFFE-RENTIAL
RECTIFIER
LIM
DIFFER
LPF
LOGIC NOISE SLICE 2
ADD
VCA2
MULTI
BIAS
VCC
GND
EQ1 EQ2 EQ3
PGZ01587 PGZ01588 PGZ01588
IC6 M5278L05
Q55 Q56
C OUT LEVEL
CRI EQ
IC28 LM6361N
Q52 Q53
IC5 M5278L12
TP2 TP3 TP4 TP5 TP6 TP7 TP8 TP9
GND3 GND4
TBC Y
TBC C
+15V (+12V) 4AB
GND 1AB
GND 2AB
ENH Y (X) 26A
ENH Y (G) 26B
TO 61 CN1-20, 62 CN1-20 TBC-2, -3 (SA-T22)
DUB Y OUT (X) 30A
DUB Y 2 (X) 30B
DUB Y OUT (G) 29A
DUB Y 2 (G) 29B
TO 71 CN2 REAR-1
TO 66 U VCR Y/C OUT (SA-E92E)
TBC Y (G) 24B
TBC Y (X) 24A
FROM 60 CN2-20 TBC-1 (SA-T22)
DUB C OUT (X) 28A
DUB C 2 (X) 28B
DUB C OUT (G) 27A
DUB C 2 (G) 27B
TO 71 CN2 REAR-1
TO 66 U-VCR Y/C OUT (SA-S92E)
L:WIDE PB 22B
FROM 30 CN3 D/C SERVO
TBC C (G) 23B
TBC C (X) 23A
FROM 60 CN1-16 TBC-1 (SA-T22)
ENH C (X) 25A
ENH C (G) 25B
TO 61 CN1-16 TBC-2 (SA-T22)
LINE OUT1 (X) 32A
LINE OUT1 (G) 31A
LINE OUT2 (X) 32B
LINE OUT2 (G) 31B
OS VIDEO (X) 21A
OS VIDEO (G) 21B
TO 71 CN2 REAR-1
TO 41 AVM/ONSC
1 2 3 4 5 6
A B C D E F G H

19 OUTPUT 4-45 4-45

- DC voltage (1/2) - (OUTPUT)

SYMBOL No.		REC	PB	SYMBOL No.		REC	PB	SYMBOL No.		REC	PB	SYMBOL No.		REC	PB
INTEGRATED CIRCUIT				IC16	1	0.7	3.5	IC21	8	0.0	0.0	IC29	1	5.0	5.0
IC 1	1	11.7	11.7		2	3.5	3.5		9	5.0	5.0		2	3.6	3.6
	2	0.0	0.0		3	1.4	3.2		10	0.0	0.0		3	2.9	2.9
	3	14.7	14.7		4	10.9	10.9		11	0.1	0.1		4	2.9	3.0
IC 2	1	11.9	11.9		5	0.0	0.0		12	5.0	5.0		5	2.9	2.9
	2	0.0	0.0		6	0.0	0.0		13	5.0	5.0		6	3.0	3.0
	3	14.7	14.7		7	0.0	0.0		14	5.0	5.0		7	3.0	3.0
IC 3	1	11.7	11.7		8	1.0	1.8		15	0.0	0.0		8	1.8	1.8
	2	0.0	0.0		9	0.7	3.5		16	5.0	5.0		9	3.0	3.0
	3	14.7	14.7		10	0.7	3.5	IC22	1	4.7	4.8		10	1.9	1.9
IC 4	1	11.7	11.8		11	1.0	1.9		2	11.8	11.8		11	3.0	3.0
	2	0.0	0.0		12	0.0	0.0		3	0.0	0.0		12	0.0	0.0
	3	14.7	14.7		13	0.1	11.9		4	4.0	4.0		13	2.9	2.9
IC 5	1	11.7	11.8		14	11.9	11.9		5	0.0	0.0		14	3.0	3.0
	2	0.0	0.0	IC17	1	1.4	3.5		6	4.7	4.7		15	0.0	0.0
	3	14.7	14.7		2	1.4	3.6		7	0.0	0.0		16	1.2	1.2
IC 6	1	5.0	5.0		3	1.0	1.8		8	4.3	4.3		17	2.8	2.8
	2	0.0	0.0		4	0.0	0.0		9	2.2	0.4		18	2.1	2.1
	3	8.0	8.0		5	1.1	1.9	IC23	1	8.3	8.3		19	2.6	2.7
IC11	1	11.7	11.7		6	1.4	3.7		2	0.0	0.0		20	2.8	2.8
	2	6.5	6.5		7	1.4	3.7		3	8.3	7.7		21	2.8	2.8
	3	6.5	6.5		8	11.9	0.0		4	0.0	0.0		22	2.8	2.8
	4	7.6	7.6	IC18	1	0.0	0.0		5	4.2	4.2		23	1.2	1.2
	5	5.7	5.7		2	4.5	4.5		6	7.5	7.5		24	2.8	2.8
	6	5.7	5.7		3	2.0	4.2		7	11.8	11.8		25	2.5	2.2
	7	0.0	0.0		4	0.0	0.0	IC24	1	0.6	0.6		26	2.9	2.9
	8	1.1	1.1		5	11.8	11.8		2	7.5	7.5		27	0.0	0.0
IC12	1	9.6	9.6		6	11.8	11.8		3	7.5	7.5		28	1.8	1.8
	2	6.0	6.0		7	11.4	11.4		4	0.0	0.0		29	2.9	2.9
	3	4.0	4.0		8	11.9	11.9		5	0.0	0.0		30	2.1	2.1
	4	0.0	0.0	IC19	1	0.0	0.0		6	6.9	6.9	IC31	1	6.3	6.3
	5	4.0	4.0		2	11.9	11.9		7	11.8	11.8		2	11.7	11.7
	6	5.8	5.8		3	0.0	0.0		8	0.5	0.5		3	2.7	2.7
	7	5.8	5.8		4	11.9	11.9	IC25	1	8.3	8.3		4	0.0	0.0
	8	11.7	11.7		5	11.9	11.9		2	0.0	0.0	IC32	1	5.0	5.0
IC13	1	8.1	8.1		6	0.0	0.0		3	8.3	8.3		2	5.0	5.0
	2	0.0	0.0		7	11.9	11.9		4	0.0	0.0		3	0.0	0.0
	3	8.1	8.1		8	0.0	0.0		5	3.8	0.8		4	5.0	5.0
	4	0.0	0.0		9	11.9	11.9		6	7.5	7.5		5	0.0	0.0
	5	0.0	0.0		10	0.0	0.0		7	11.8	11.8		6	0.0	0.0
	6	8.1	8.1		11	11.9	11.9	IC26	1	8.3	8.3		7	0.0	0.0
	7	0.0	0.0		12	0.0	0.0		2	0.0	0.0		8	4.8	4.8
	8	7.3	7.3		13	0.4	0.4		3	8.2	8.2		9	4.8	4.8
	9	11.7	11.7		14	11.9	11.9		4	0.0	0.0		10	0.0	0.0
IC14	1	7.7	7.7		15	0.0	0.0		5	4.2	4.2		11	5.0	5.0
	2	2.6	2.6		16	11.9	11.9		6	7.5	7.5		12	0.6	0.6
	3	2.6	2.6	IC20	1	11.7	11.7		7	11.8	11.8		13	0.6	0.6
	4	7.7	7.7		2	6.0	6.0	IC27	1	0.6	0.6		14	5.0	5.0
	5	1.9	1.9		3	6.0	6.0		2	7.5	7.5	IC33	1	11.8	11.8
	6	1.9	1.9		4	7.6	7.6		3	7.5	7.5		2	0.0	0.0
	7	0.0	0.0		5	5.3	5.3		4	0.0	0.0		3	14.7	14.7
	8	1.1	1.1		6	5.3	5.3		5	0.0	0.0	IC34	1	11.8	11.8
IC15	1	3.5	3.5		7	0.0	0.0		6	6.8	6.8		2	0.0	0.0
	2	3.5	3.5		8	1.1	1.1		7	11.8	11.8		3	14.7	14.7
	3	3.5	3.5	IC21	1	0.0	0.0		8	0.5	0.5				
	4	0.0	0.0		2	4.9	4.9	IC28	1	0.5	0.5				
	5	1.4	3.5		3	5.0	5.0		2	6.9	6.9				
	6	1.4	3.5		4	0.0	0.0		3	6.9	6.9				
	7	1.4	3.2		5	4.9	4.9		4	0.0	0.0				
	8	11.7	11.7		6	0.1	0.1		5	0.0	0.0				
					7	4.9	4.9		6	6.3	6.3				
									7	11.8	11.8				
									8	0.5	0.5				

- DC voltage (2/2) - (OUTPUT)

SYMBOL No.		REC	PB	SYMBOL No.		REC	PB	SYMBOL No.		REC	PB	SYMBOL No.		REC	PB
TRANSISTOR				Q23	B	4.7	6.2	Q43	B	3.2	3.1	**CONNECTOR**			
Q 1	B	6.5	6.5		C	6.6	5.0		C	7.4	7.4	CN 1	1AB	0.0	0.0
	C	11.7	11.7		E	0.0	0.0		E	2.5	2.5		2AB	0.0	0.0
	E	5.8	5.8	Q24	B	11.0	11.0	Q44	B	7.4	7.4		3AB	8.0	8.0
Q 2	B	5.8	5.8		C	0.0	0.0		C	11.7	11.7		4AB	14.7	14.7
	C	0.0	0.0		E	11.4	11.5		E	6.7	6.7		5A	6.0	6.0
	E	6.5	6.5	Q25	B	11.4	11.5	Q45	B	2.1	2.9		5 B	0.0	0.0
Q 3	B	5.8	5.8		C	11.9	11.9		C	2.9	2.1		6A	5.0	0.2
	C	0.0	0.0		E	10.8	10.8		E	0.0	0.0		6 B	0.2	0.2
	E	6.5	6.5	Q26	B	2.9	2.5	Q46	B	4.0	4.0		7A	0.0	0.0
Q 4	B	7.6	7.6		C	4.6	5.6		C	11.8	11.8		7 B	4.4	4.4
	C	11.7	11.7		E	0.0	0.0		E	3.4	3.4		8A	0.0	0.0
	E	6.9	6.9	Q27	B	10.0	10.0	Q47	B	6.9	6.9		8 B	0.0	0.0
Q 5	B	0.4	0.4		C	0.0	0.0		C	0.0	0.0		9A	0.0	0.0
	C	11.7	11.7		E	0.0	0.0		E	7.6	7.5		9 B	0.0	0.0
	E	11.7	11.7	Q28	B	0.0	0.0	Q48	B	6.9	6.9		10A	0.0	0.0
Q 6	B	9.6	9.6		C	10.0	10.0		C	11.8	11.8		10B	0.0	0.0
	C	11.7	11.7		E	0.0	0.0		E	8.4	8.5		11A	0.0	0.0
	E	9.0	9.0	Q29	B	10.0	10.0	Q49	B	7.5	7.5		11 B	0.0	0.0
Q 7	B	6.4	6.4		C	0.0	0.0		C	11.8	11.8		12A	0.0	0.0
	C	11.7	11.7		E	0.0	0.0		E	6.9	6.9		12 B	0.0	0.0
	E	5.8	5.8	Q30	B	0.0	0.0	Q50	B	7.2	7.2		15A	6.5	6.5
Q 9	B	5.8	5.8		C	10.0	10.0		C	0.0	0.0		15 B	0.0	0.0
	C	10.5	10.5		E	0.0	0.0		E	7.5	7.5		16A	6.1	6.1
	E	5.2	5.2	Q31	B	0.8	0.8	Q51	B	7.8	8.0		16 B	0.0	0.0
Q10	B	10.5	10.5		C	11.7	11.7		C	11.8	11.8		17A	6.5	6.5
	C	7.9	7.9		E	0.0	0.0		E	6.2	9.3		17 B	0.0	0.0
	E	11.2	11.2	Q32	B	6.0	6.0	Q52	B	6.3	6.4		18A	0.6	0.6
Q12	B	7.7	7.7		C	11.7	11.7		C	0.0	0.0		18 B	0.6	0.6
	C	11.7	11.7		E	5.4	5.4		E	6.8	6.9		19A	6.9	6.9
	E	6.4	6.4	Q33	B	5.4	5.4	Q53	B	6.4	6.4		19 B	0.0	0.0
Q13	B	7.7	7.7		C	0.0	0.0		C	11.8	11.8		20A	2.3	2.1
	C	11.7	11.7		E	6.0	6.0		E	7.6	8.1		20 B	0.0	0.0
	E	6.5	6.5	Q34	B	5.4	5.4	Q55	B	1.4	1.4		21A	0.0	0.0
Q14	B	3.2	3.2		C	0.0	0.0		C	3.6	3.6		21 B	0.0	0.0
	C	0.0	0.0		E	6.0	6.0		E	0.8	0.8		22A	4.2	4.2
	E	3.9	3.9	Q35	B	7.1	7.1	Q56	B	3.6	3.6		22 B	9.7	9.7
Q15	B	1.4	3.5		C	11.7	11.7		C	5.0	5.0		23A	3.9	3.9
	C	0.0	0.0		E	11.7	11.7		E	2.9	2.9		23 B	0.0	0.0
	E	2.0	4.2	Q36	G	7.6	7.6	Q61	B	9.9	9.9		24A	5.0	5.0
Q16	B	1.4	3.7		D	8.1	8.1		C	0.0	0.0		24 B	0.0	0.0
	C	0.0	0.0		S	7.6	7.6		E	0.0	0.0		25A	6.9	6.9
	E	2.0	4.2	Q37	B	0.6	0.6	Q62	B	3.4	3.4		25 B	0.0	0.0
Q17	B	11.4	11.4		C	0.0	0.0		C	7.6	7.6		26A	3.4	3.4
	C	0.0	0.0		E	0.0	0.0		E	2.7	2.7		26 B	0.0	0.0
	E	0.0	0.0	Q38	B	0.6	0.6	Q63	G	3.9	0.8		27A	0.0	0.0
Q18	B	11.4	11.4		C	0.0	0.0		D	0.1	11.9		27 B	0.0	0.0
	C	0.4	0.4		E	0.0	0.0		S	0.0	0.0		28A	0.0	0.0
	E	11.9	11.9	Q39	B	7.6	7.6	Q64	G	0.0	0.0		28 B	0.0	0.0
Q19	G	0.0	0.0		C	11.7	11.7		D	0.0	0.0		29A	0.0	0.0
	D	11.9	11.9		E	7.0	7.0		S	0.0	0.0		29 B	0.0	0.0
	S	0.0	0.0	Q40	B	6.0	6.0	Q65	B	7.5	7.5		30A	0.0	0.0
Q20	B	11.3	11.3		C	0.0	0.0		C	11.9	11.8		30 B	0.0	0.0
	C	11.9	11.9		E	6.7	6.7		E	6.9	6.9		31A	0.0	0.0
	E	11.9	11.9	Q41	B	1.7	1.7	Q66	B	7.5	7.5		31 B	0.0	0.0
Q21	B	0.6	0.6			7.0	7.0		C	11.9	11.8		32A	0.0	0.0
	C	0.0	0.0			1.1	1.1		E	6.9	6.9		32 B	0.0	0.0
	E	0.0	0.0	Q42	B	7.0	6.9	Q67	G	0.1	0.1				
Q22	B	4.6	6.4		C	11.7	11.7		D	0.0	0.0				
	C	7.2	0.0		E	6.4	6.3		S	0.0	0.0				
	E	11.9	11.9												

4.39 OUTPUT CIRCUIT BOARD

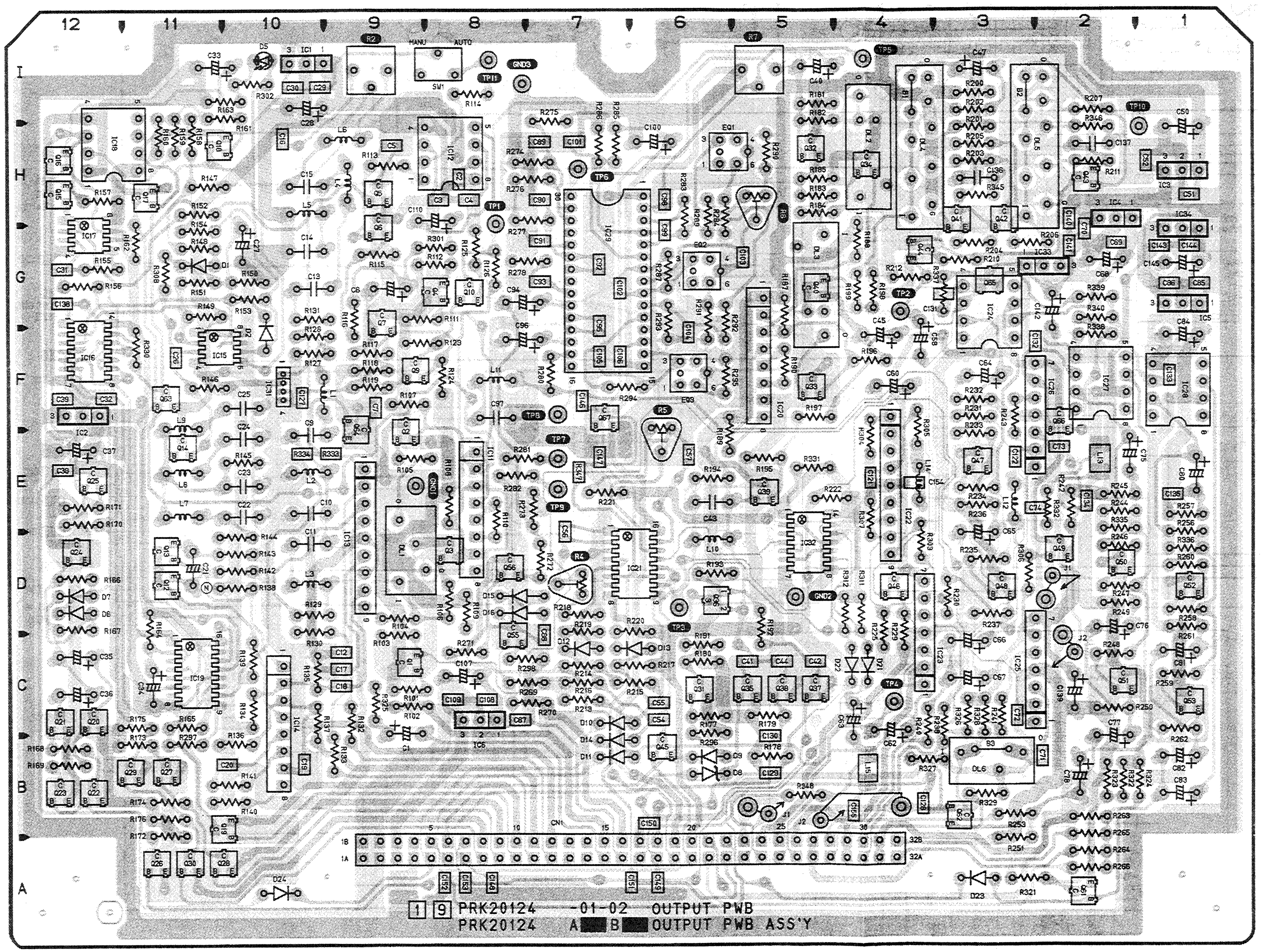
12
11
10
9
8
7
6
5
4
3
2
1
I
H
G
F
E
D
C
B
A
MANU
AUTO
SW1
TP1
TP2
TP3
TP4
TP5
TP6
TP7
TP8
TP9
TP10
TP11
GND2
GND3
CN1
J1
J2
1B
1A
32B
32A
1 9 PRK20124 -01-02 OUTPUT PWB
PRK20124 A B OUTPUT PWB ASS'Y

— MAIN WAVEFORMS OF OUTPUT CIRCUIT —

TP1, TP2, TP4

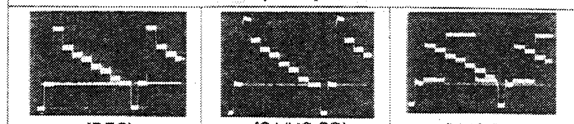

[REC]
TP1: 550 mVp-p
TP2: 830 mVp-p
TP4: 970 mVp-p

[S-VHS PB]
TP1: 660 mVp-p
TP2: 980 mVp-p
TP4: 980 mVp-p

[VHS PB]
TP1: 660 mVp-p
TP2: 980 mVp-p
TP4: 980 mVp-p

TP5

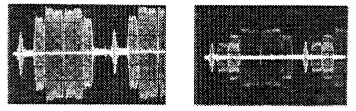

[S-VHS PB]

[VHS PB]

170 mVp-p: Burst level

TP6

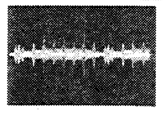

[PB]
S-VHS: 930 mVp-p
VHS: 900 mVp-p

TP8

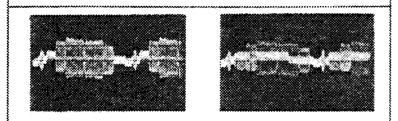

[S-VHS PB]

[VHS PB]

30 mVp-p: Burst level

4.40 PRE/REC SCHEMATIC DIAGRAM & CIRCUIT BOARD

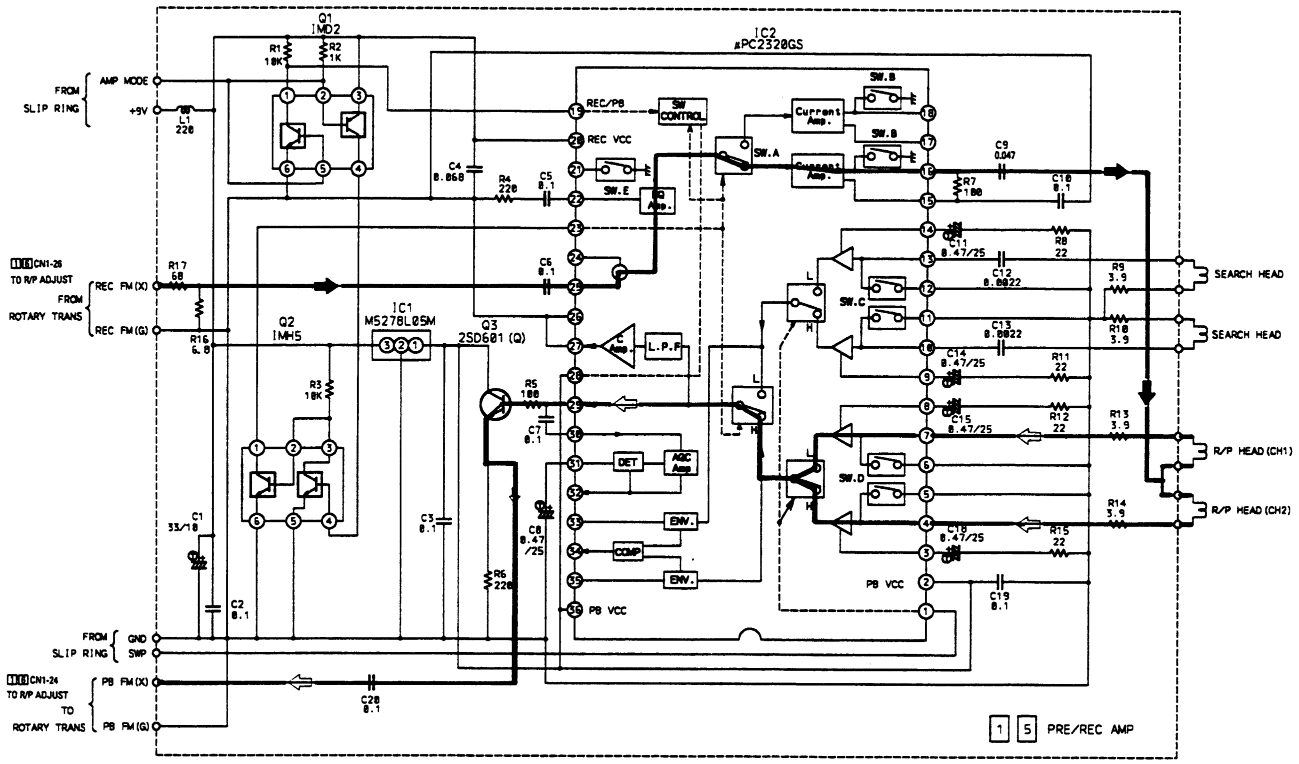
Q1 IMD2
IC2 µPC2320GS
IC1 M5278L05M
Q2 IMH5
Q3 2SD601 (Q)
FROM SLIP RING
AMP MODE
+5V
REC FM (X)
REC FM (Q)
FROM ROTARY TRANS
TO R/P ADJUST
SEARCH HEAD
R/P HEAD (CH1)
R/P HEAD (CH2)
PB VCC
GND
SWP
PB FM (X)
PB FM (Q)
1 5 PRE/REC AMP

4.41 FM AUDIO PRE/REC SCHEMATIC DIAGRAM & CIRCUIT BOARD

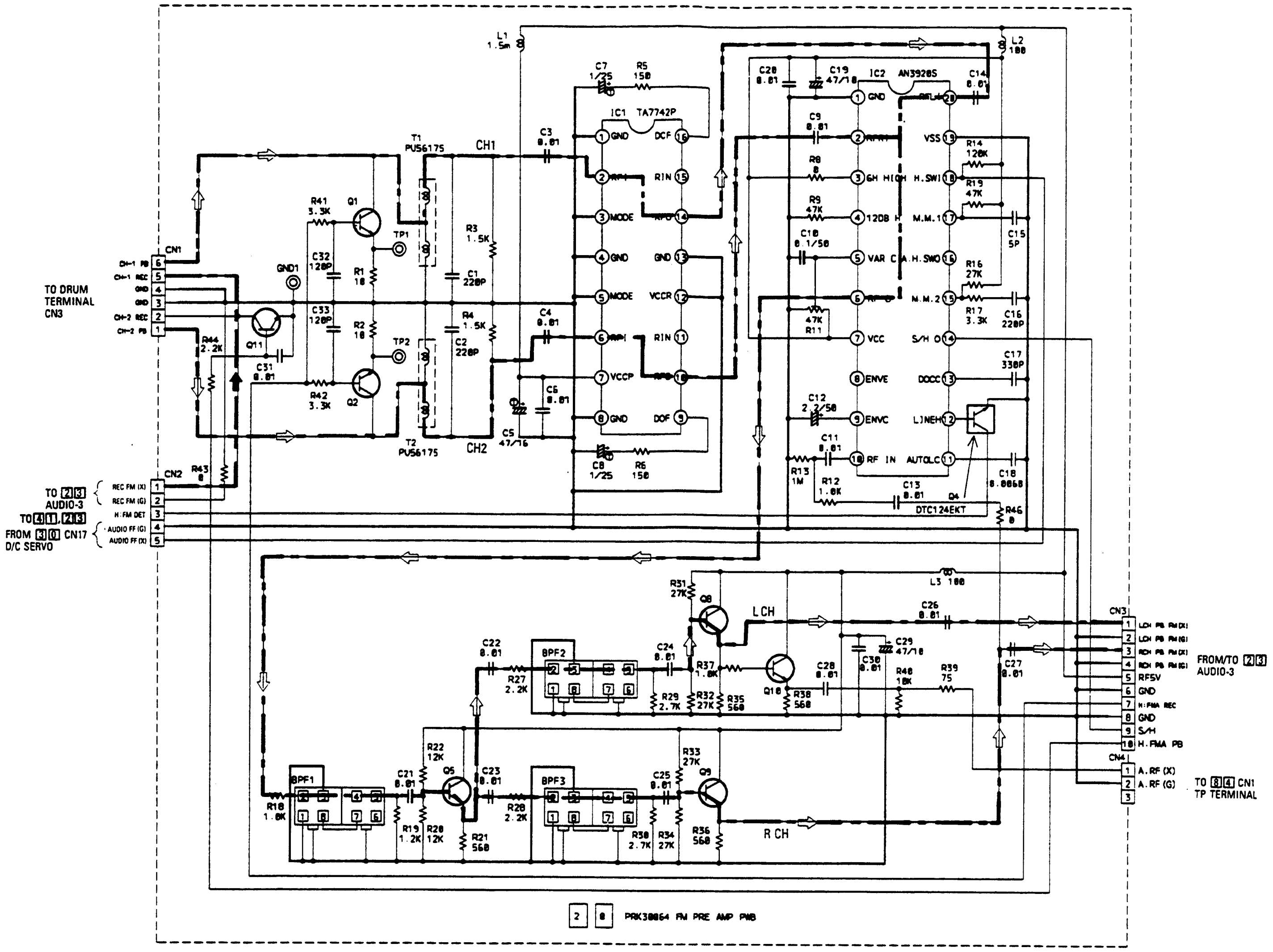
IC1 TA7742P
IC2 AN3920S
T1 PU56175
T2 PU56175
CH1
CH2
LCH
RCH
BPF1
BPF2
BPF3
TO DRUM TERMINAL CN3
TO 2 0 AUDIO-3
TO 4 1, 2 3
FROM 3 0 CN17 D/C SERVO
FROM/TO 2 3 AUDIO-3
TO 3 4 CN1 TP TERMINAL
2 0 PRK30064 FM PRE AMP PWB

• PRE/REC CIRCUIT BOARD

— Front —

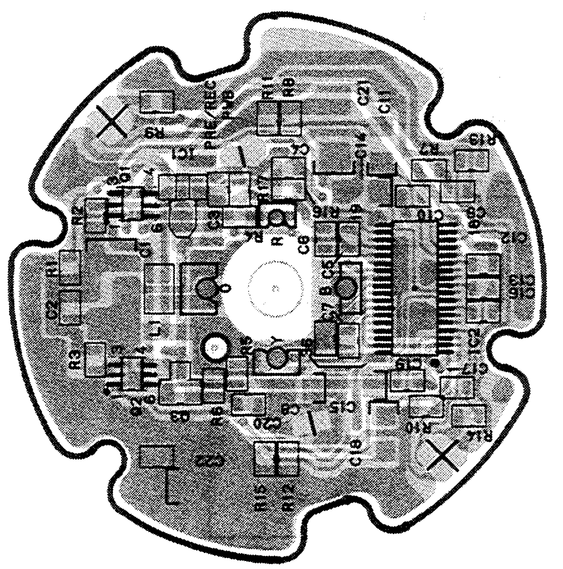

• FM AUDIO PRE/REC CIRCUIT BOARD

— Rear —

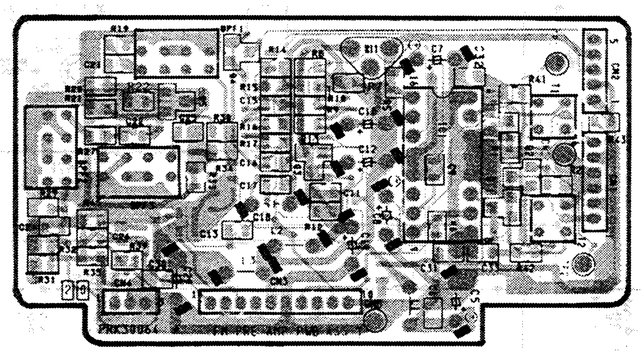

— Front —

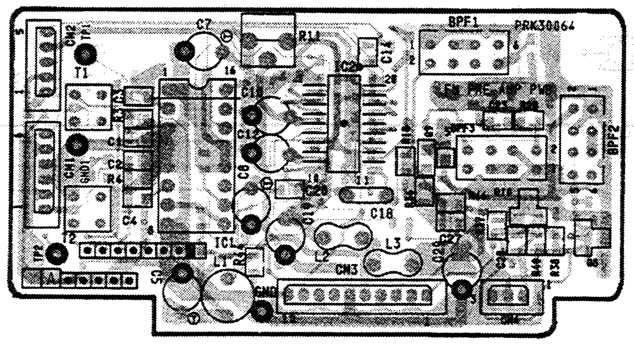
PRK30064
BPF1
BPF2
IC1
IC2
CN3

— DC Voltage —

SYMBOL	No.	REC	PB
INTEGRATED CIRCUIT			
IC1	1	0.0	0.0
	2	0.0	0.7
	3	0.0	0.0
	4	0.0	0.0
	5	0.0	0.0
	6	0.0	0.7
	7	0.0	4.7
	8	0.0	0.0
	9	0.0	1.0
	10	0.1	2.5
	11	0.0	0.0
	12	0.0	0.0
	13	0.0	0.0
	14	0.1	2.5
	15	0.0	0.0
	16	0.0	1.0
IC2	1	0.0	0.0
	2	0.0	2.9
	3	0.0	4.8
	4	0.0	0.0
	5	0.0	2.8
	6	0.0	1.6
	7	0.0	4.8
	8	0.0	3.1
	9	0.3	0.1
	10	0.1	3.4
	11	0.0	2.5
	12	0.0	0.0
	13	0.0	3.3
	14	0.0	0.0
	15	0.0	0.1
	16	0.0	2.4
	17	0.0	0.0
	18	0.0	2.6
	19	0.0	0.0
	20	0.0	2.9
TRANSISTOR			
Q1	B	0.7	-0.1
	C	0.0	0.0
	E	0.0	0.0
Q2	B	0.7	0.0
	C	0.0	0.0
	E	0.0	0.0
Q4	B	0.0	0.0
	C	5.0	5.0
	E	0.0	0.0
Q5	B	0.0	2.4
	C	0.0	4.8
	E	0.0	1.7
Q8	B	0.0	2.3
	C	0.1	4.8
	E	0.0	1.7
Q9	B	0.0	2.3
	C	0.0	4.8
	E	0.0	1.7
Q10	B	0.0	1.7
	C	0.0	4.8
	E	0.0	1.1
Q11	B	-0.7	0.8
	C	0.0	0.0
	E	0.0	0.0
CONNECTOR			
CN1	1	0.0	0.0
	2	0.0	0.0
	3	0.0	0.0
	4	0.0	0.0
	5	0.0	0.0
	6	0.0	0.0
CN2	1	0.0	0.0
	2	0.0	0.0
	3	5.0	5.0
	4	0.0	0.0
	5	0.0	2.6
CN3	1	0.0	0.0
	2	0.0	0.0
	3	0.0	0.0
	4	0.0	0.0
	5	0.0	4.8
	6	0.0	0.0
	7	9.0	0.0
	8	0.0	0.0
	9	0.0	0.0
	10	-0.7	11.9
CN4	1	0.0	0.0
	2	0.0	0.0
	3	0.0	0.0

4.42 AUDIO-1 SCHEMATIC DIAGRAM

— DIAGRAM (1/3) —

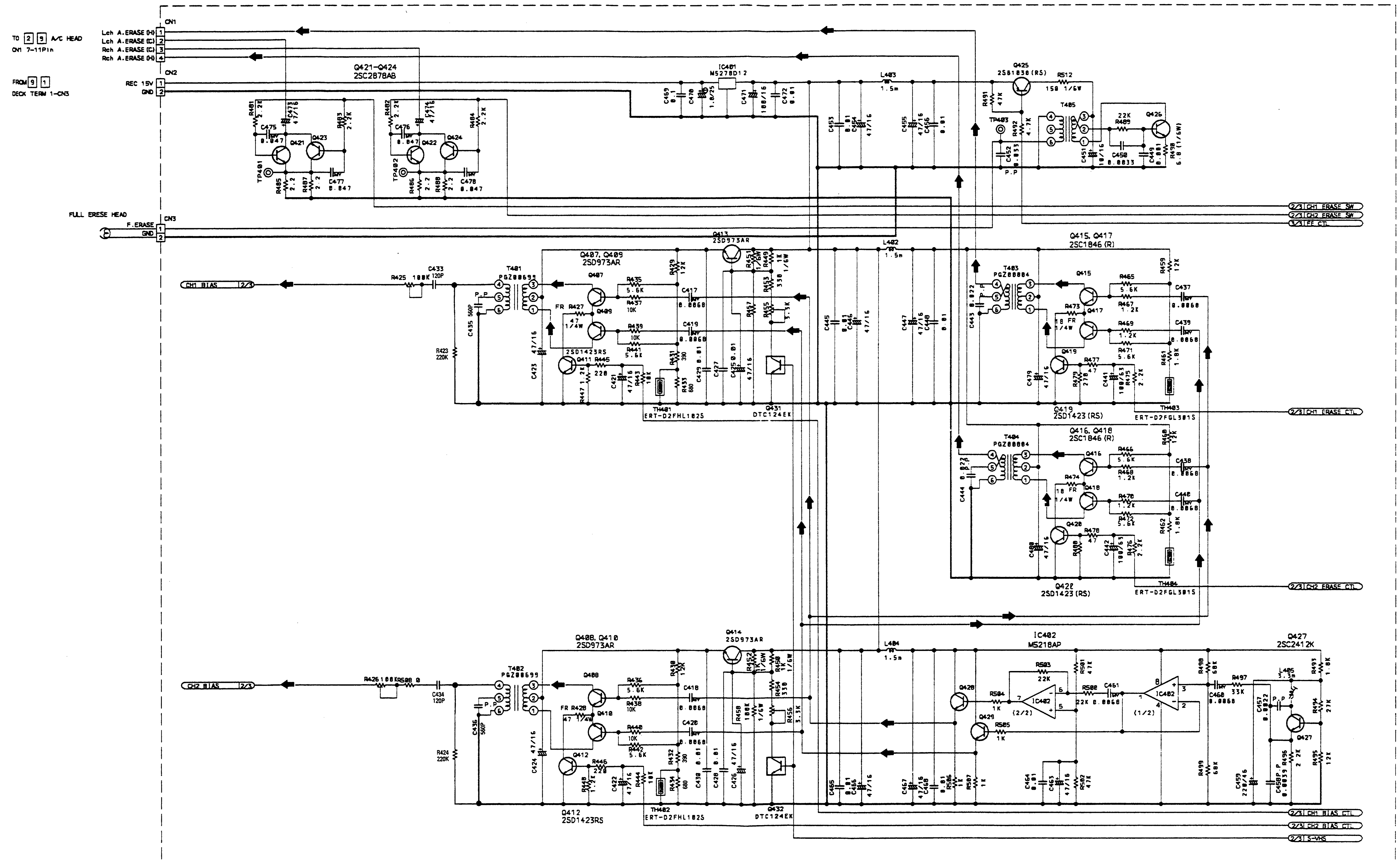
TO 2 9 A/C HEAD
CN1 7-11Pin
FROM 9 1
DECK TERM 1-CN3
CN1
Lch A.ERASE (H) 1
Lch A.ERASE (C) 2
Rch A.ERASE (C) 3
Rch A.ERASE (H) 4
CN2
REC 15V 1
GND 2
FULL ERESE HEAD
CN3
F.ERASE 1
GND 2
Q421-Q424
2SC2878AB
R481 2.2K
C473 47/16
R483 2.2K
C475 0.047
Q421
Q423
TP401
R485 2.2
R487 2.2
C477 0.047
R482 2.2K
C474 47/16
R484 2.2K
C476 0.047
Q422
Q424
TP402
R486 2.2
R488 2.2
C478 0.047
IC401
M5278D12
C469 0.1
C470
C471 100/16
C472 0.01
L403 1.5m
C453 0.01
C454 47/16
C455 47/16
C456 0.01
Q425
2SB1030(RS)
R512 150 1/6W
R491 47K
R492 4.7K
TP403
C452 0.033
P.P
T405
22K R489
Q426
C451 10/16
C450 0.0033
C449 0.001
R490 6.8 (1/6W)
2/3 CH1 ERASE SW
2/3 CH2 ERASE SW
3/3 FE CTL
CH1 BIAS 2/3
R425 100K
C433 120P
T401 PGZ00699
P.P
C435 560P
R423 220K
Q407, Q409
2SD973AR
Q407
Q409
FR R427 47 1/4W
R435 5.6K
R437 10K
R439 10K
R441 5.6K
C417 0.0068
C419 0.0068
C423 47/16
Q411
2SD1423RS
R445 220
R447 1.2K
C421 47/16
R443 10K
R429 12K
R431 390
R433 680
C429 0.01
C427
C425 0.01
47/16
Q413
2SD973AR
R451 1/6W
R449 1K 1/6W
R453 330
R457
R455 3.3K
TH401
ERT-D2FHL102S
Q431
DTC124EK
L402 1.5m
C445 0.01
C446 47/16
C447 47/16
C448 0.01
Q415, Q417
2SC1846 (R)
T403 PGZ00004
C443 0.022
P.P
Q415
R465 5.6K
R467 1.2K
R473 10 FR 1/4W
Q417
R469 1.2K
R471 5.6K
C437 0.0068
C439 0.0068
R459 12K
R461 1.8K
Q419
R477 47
C479 47/16
R479 270
C441 100/10
R475 2.2K
TH403
Q419
2SD1423(RS)
ERT-D2FGL301S
2/3 CH1 ERASE CTL
Q416, Q418
2SC1846 (R)
T404 PGZ00004
C444 0.022
Q416
R466 5.6K
R468 1.2K
R474 10 FR 1/4W
Q418
R470 1.2K
R472 5.6K
C438 0.0068
C440 0.0068
R460 12K
R462 1.8K
Q420
R478 47
C480 47/16
R480
C442 100/10
R476 2.2K
TH404
Q422
2SD1423(RS)
ERT-D2FGL301S
2/3 CH2 ERASE CTL
CH2 BIAS 2/3
R426 100K
R508 0
C434 120P
T402 PGZ00699
C436 560P
R424 220K
Q408, Q410
2SD973AR
Q408
Q410
FR R428 47 1/4W
R436 5.6K
R438 10K
R440 10K
R442 5.6K
C418 0.0068
C420 0.0068
C424 47/16
Q412
2SD1423RS
R446 220
R448 1.2K
C422 47/16
R444 10K
R430 12K
R432 390
R434 680
C430 0.01
C428 0.01
C426 47/16
Q414
2SD973AR
R452 1K 1/6W
R450 1K 1/6W
R454 330
R458 100K 1/6W
R456 3.3K
TH402
ERT-D2FHL102S
Q432
DTC124EK
L404 1.5m
C465 0.01
C466 47/16
C467 47/16
C468 0.01
R506 1K
R507 1K
IC402
M5218AP
Q428
Q429
R503 22K
R504 1K
R505 1K
IC402 (2/2)
R501 47K
R500 22K
C461 0.0068
IC402 (1/2)
R502 47K
C464 0.01
C463 47/16
Q427
2SC2412K
R498 68K
R499 68K
R497 33K
C460 0.0068
L405 3.3m
C457 0.0022
P.P
C459 220/16
C458 0.0039
R496 2.2K
R493 1.8K
R494 27K
R495 12K
2/3 CH1 BIAS CTL
2/3 CH2 BIAS CTL
2/3 S-VHS

— DIAGRAM (2/3) —

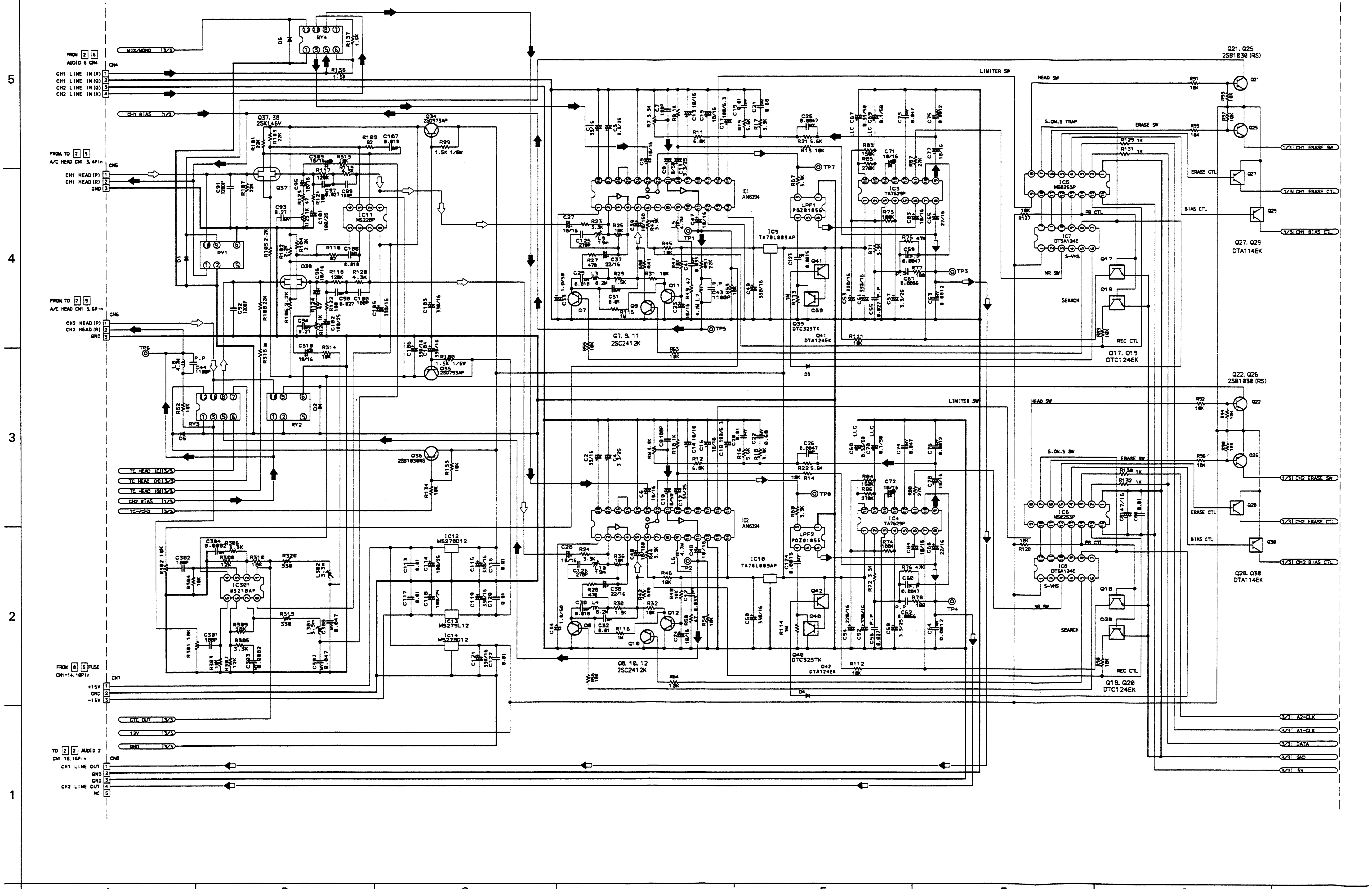
6
5
4
3
2
1
A
B
C
E
F
G
H
FROM 2 6 AUDIO 6 CN4
CN4
CH1 LINE IN(X)
CH1 LINE IN(O)
CH2 LINE IN(O)
CH2 LINE IN(X)
MIX/MONO 1/3
CH1 BIAS 1/3
FROM TO 2 9 A/C HEAD CN1 3, 4Pin
CN5
CH1 HEAD(P)
CH1 HEAD(R)
GND
FROM TO 2 9 A/C HEAD CN1 5, 6Pin
CN6
CH2 HEAD(P)
CH2 HEAD(R)
GND
TP6
TC HEAD (C) 3/3
TC HEAD (O) 3/3
TC HEAD (G) 3/3
CH2 BIAS 1/3
TC→CH2 3/3
FROM 8 5 FUSE CN1-14, 10Pin
CN7
+15V
GND
-15V
CTC OUT 3/3
12V 3/3
GND 3/3
TO 2 2 AUDIO 2 CN1 10, 16Pin
CN8
CH1 LINE OUT
GND
GND
CH2 LINE OUT
NC
RY4
RY1
RY2
RY3
D5
D1
D2
D5
R136 1.5K
R137 1.5K
Q37, 38 2SK146V
Q37
Q38
Q34 2SD973AP
Q35 2SD973AP
Q36 2SB1030RS
R99 1.5K 1/6W
R100 1.5K 1/6W
R109 82
C107 0.018
R110 82
C108 0.018
IC11 M5220P
IC301 M5218AP
IC12 M5278D12
IC13 M5275L12
IC14 M5278D12
R133 10K
R134 10K
C91 1200P
C92 1200P
R101 22K
R102 22K
L8 4.7m
C44 1100P
P.P
IC1 AN6394
IC2 AN6394
IC9 TA78L005AP
IC10 TA78L005AP
LPF1 PGZ81056
LPF2 PGZ81056
IC3 TA7629P
IC4 TA7629P
IC5 M5E253P
IC6 M5E253P
IC7 DTSA124E
IC8 DTSA124E
S-VHS
TP1
TP2
TP3
TP4
TP5
TP7
TP8
Q7
Q8
Q9
Q10
Q11
Q12
Q7, 9, 11 2SC2412K
Q8, 10, 12 2SC2412K
Q39 DTC323TK
Q41 DTA124EK
Q40 DTC323TK
Q42 DTA124EK
D3
D4
R111 10K
R112 10K
R63 10K
R64 10K
LIMITER SW
HEAD SW
S.ON.S TRAP
S.ON.S SW
ERASE SW
ERASE CTL
BIAS CTL
PB CTL
NR SW
SEARCH
REC CTL
Q17
Q18
Q19
Q20
Q17, Q19 DTC124EK
Q18, Q20 DTC124EK
Q21, Q25 2SB1030 (RS)
Q22, Q26 2SB1030 (RS)
Q21
Q22
Q25
Q26
Q27
Q28
Q29
Q30
Q27, Q29 DTA114EK
Q28, Q30 DTA114EK
1/3 CH1 ERASE SW
1/3 CH1 ERASE CTL
1/3 CH1 BIAS CTL
1/3 CH2 ERASE SW
1/3 CH2 ERASE CTL
1/3 CH2 BIAS CTL
3/3 A2-CLK
3/3 A1-CLK
3/3 DATA
3/3 GND
3/3 5V

— DIAGRAM (3/3) —

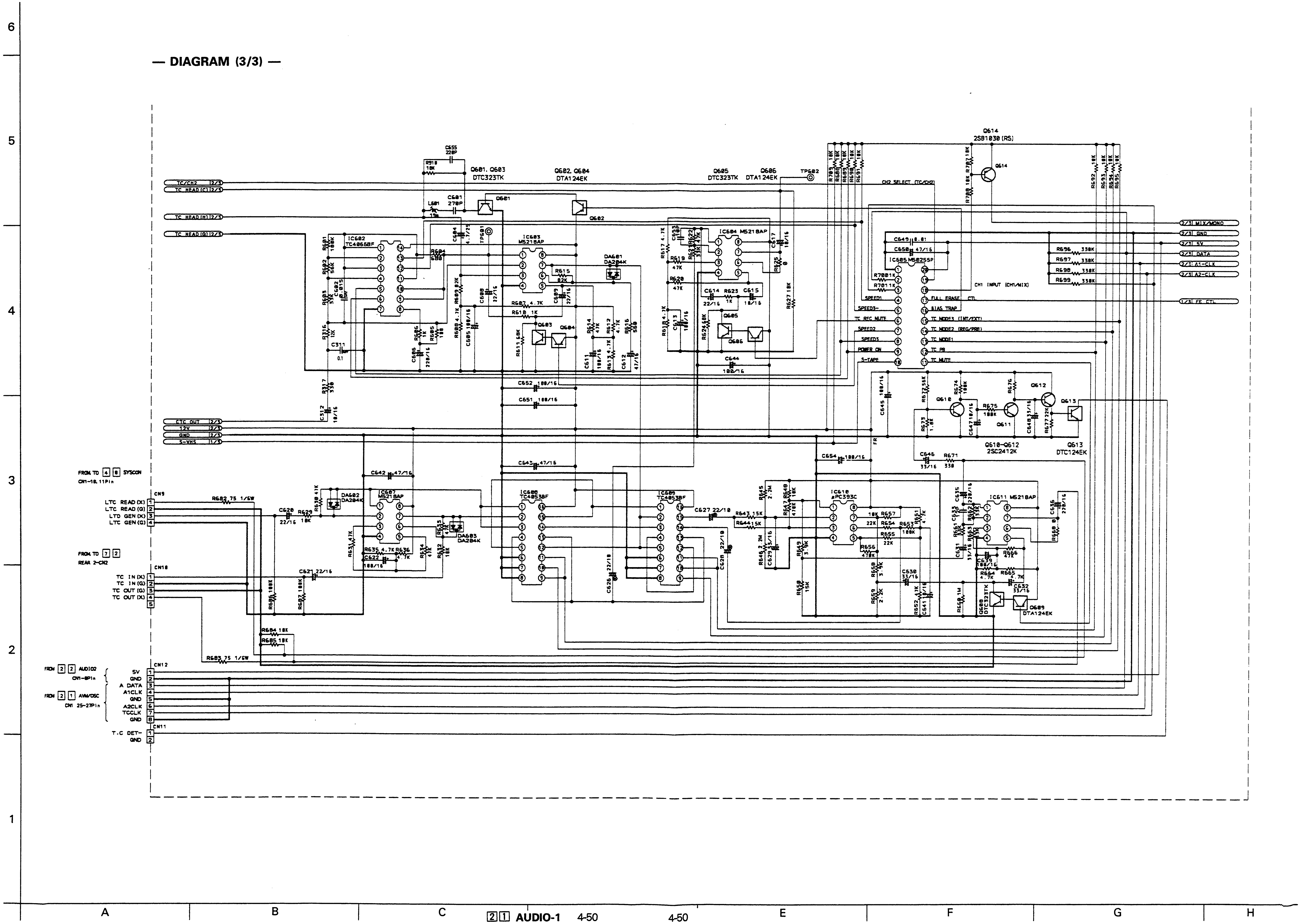

FROM TO 4 8 SYSCON
CN1-10, 11Pin
CN9
LTC READ (X) 1
LTC READ (G) 2
LTD GEN (X) 3
LTC GEN (G) 4
FROM TO 7 2
REAR 2-CN2
CN10
TC IN (X) 1
TC IN (G) 2
TC OUT (G) 3
TC OUT (X) 4
5
FROM 2 2 AUDIO2
CN1-8Pin
FROM 2 1 AVM/OSC
CN1 25-27Pin
CN12
5V 1
GND 2
A DATA 3
A1CLK 4
GND 5
A2CLK 6
TCCLK 7
GND 8
CN11
T.C DET- 1
GND 2
TC/CH2 2/3
TC HEAD (C) 2/3
TC HEAD (H) 2/3
TC HEAD (G) 2/3
CTC OUT 2/3
12V 2/3
GND 2/3
S-VHS 1/3
2/3 MIX/MONO
2/3 GND
2/3 5V
2/3 DATA
2/3 A1-CLK
2/3 A2-CLK
1/3 FE CTL
Q601, Q603 DTC323TK
Q602, Q604 DTA124EK
Q605 DTC323TK
Q606 DTA124EK
Q614 2SB1030 (RS)
Q610-Q612 2SC2412K
Q613 DTC124EK
Q608 DTC323TK
Q609 DTA124EK
IC602 TC4066BF
IC603 M5218AP
IC604 M5218AP
IC605 M50255P
IC607 M5218AP
IC608 TC4053BF
IC609 TC4053BF
IC610 µPC393C
IC611 M5218AP
DA601 DA204K
DA602 DA204K
DA603 DA204K
TP601
TP602
C655 220P
R318 10K
L601
C601 270P
CH2 SELECT (TC/CH2)
CH1 INPUT (CH1/MIX)
SPEED1
SPEED3-
TC REC MUTE
SPEED2
SPEED3
POWER ON
S-TAPE
FULL ERASE CTL
BIAS TRAP
TC MODE3 (INT/EXT)
TC MODE2 (REC/PRE)
TC MODE1
TC PB
TC MUTE
C649 0.01
C650 47/16
R700 1K
R701 1K
R696 330K
R697 330K
R698 330K
R699 330K
R709 10K
R688 10K
R689 10K
R690 10K
R691 10K
R692 10K
R693 10K
R694 10K
R695 10K
R707 10K
R708 10K
R682 75 1/6W
R683 75 1/6W
R684 10K
R685 10K
R686 100K
R687 100K
C620 22/16
R629 10K
R630 47K
R631 47K
R635 4.7K
R636 4.7K
C622 100/16
C621 22/16
C642 47/16
C643 47/16
C651 100/16
C652 100/16
C654 100/16
C644 100/16
C627 22/10
C628 22/10
C626 22/10
R643 15K
R644 15K
R657 10K
R654 22K
R653 100K
R655 22K
R656 470K
C630 33/16
C632 33/16
R664 4.7K
R665 4.7K
R666 47K
C646 33/16
R671 330
R675 100K
A
B
C
D
E
F
G
H
1
2
3
4
5
6

— DC Voltage (1/2) —

SYMBOL	No.	REC	PB
INTEGRATED CIRCUIT			
IC1	1	4.5	4.5
	2	4.6	4.6
	3	0.0	0.0
	4	4.6	4.6
	5	4.7	4.7
	6	0.2	9.1
	7	4.7	4.7
	8	8.9	8.9
	9	4.7	4.7
	10	4.7	4.7
	11	4.6	4.8
	12	0.0	0.0
	13	4.8	4.8
	14	9.1	9.1
	15	0.1	0.1
	16	0.0	0.0
	17	0.0	0.3
	18	4.7	4.7
	19	4.7	4.8
	20	4.7	4.7
	21	4.7	4.7
	22	4.7	4.8
	23	4.7	4.7
	24	0.0	0.0
	25	4.7	4.7
	26	4.7	4.7
	27	4.7	4.7
	28	4.7	4.7
IC2	1	4.5	4.5
	2	4.6	4.6
	3	0.0	0.0
	4	4.6	4.6
	5	4.7	4.7
	6	4.7	9.1
	7	4.7	4.7
	8	8.8	8.9
	9	4.7	4.7
	10	4.7	4.7
	11	4.7	4.8
	12	0.0	0.0
	13	4.8	4.8
	14	8.9	9.1
	15	0.1	0.1
	16	0.0	0.0
	17	0.0	0.3
	18	4.7	4.7
	19	4.7	4.8
	20	4.7	4.7
	21	4.7	4.7
	22	4.7	4.8
	23	4.7	4.7
	24	0.0	0.0
	25	4.7	4.7
	26	4.7	4.7
	27	4.7	4.7
	28	4.7	4.7
IC3	1	11.5	11.5
	2	5.8	5.8
	3	0.0	0.0
	4	5.7	5.7
	5	5.7	5.7
	6	5.8	5.8
	7	0.0	5.5
	8	5.8	5.8
	9	5.8	5.8
	10	5.8	5.8
	11	0.0	0.0
	12	5.8	5.8
	13	5.8	5.8
	14	6.2	6.2
	15	5.8	5.8
	16	5.6	5.6
IC4	1	11.5	11.5
	2	5.8	5.8
	3	0.0	0.0
	4	5.7	5.7
	5	5.7	5.7
	6	5.8	5.8
	7	0.0	5.5
	8	5.8	5.8
	9	5.8	5.8
	10	5.8	5.8
	11	0.0	0.0
	12	5.8	5.8
	13	5.8	5.8
	14	6.2	6.2
	15	5.8	5.8
	16	5.7	5.6
IC5	1	0.0	0.0
	2	0.1	0.1
	3	0.0	0.0
	4	0.0	11.9
	5	0.0	11.9
	6	0.0	11.9
	7	11.9	11.9
	8	0.0	11.9
	9	0.0	0.0
	10	11.9	11.9
	11	11.9	11.9
	12	11.9	11.9
	13	11.9	11.9
	14	6.7	0.0
	15	0.0	9.1
	16	5.1	5.1
IC6	1	0.0	0.0
	2	0.1	0.1
	3	0.0	0.0
	4	0.0	11.9
	5	0.0	11.9
	6	0.0	11.9
	7	11.9	11.9
	8	0.0	11.9
	9	0.0	0.0
	10	11.9	11.9
	11	11.9	11.9
	12	11.9	11.9
	13	11.9	11.9
	14	6.7	0.0
	15	4.6	9.1
	16	5.1	5.1
IC7	1	12.0	12.0
	2	0.0	0.0
	3	0.0	0.0
	4	0.0	0.0
	5	0.0	0.0
	6	0.0	0.0
	7	12.0	12.0
	8	11.9	11.9
	9	11.9	11.9
	10	11.9	11.9
	11	11.9	11.9
	12	11.9	11.9
IC8	1	12.0	12.0
	2	0.0	0.0
	3	0.0	0.0
	4	0.1	0.0
	5	0.1	0.0
	6	0.1	0.0
	7	12.0	12.0
	8	11.9	11.9
	9	11.9	11.9
	10	11.9	11.9
	11	11.9	11.9
	12	11.9	11.9
IC9	1	12.0	12.0
	2	0.0	0.0
	3	9.1	9.1
IC10	1	12.0	12.0
	2	0.0	0.0
	3	8.9	8.9
IC11	1	0.0	0.0
	2	5.3	5.3
	3	5.3	5.3
	4	-11.5	-11.5
	5	5.3	5.3
	6	5.3	5.3
	7	0.0	0.0
	8	11.2	11.2
IC12	1	14.6	14.6
	2	0.0	0.0
	3	12.0	12.0
IC13	1	0.0	0.0
	2	-14.6	14.6
	3	-12.3	12.3
IC14	1	14.6	14.6
	2	0.0	0.0
	3	12.0	12.0
IC301	1	—	0.0
	2	—	0.0
	3	—	0.0
	4	—	-11.5
	5	—	0.0
	6	—	0.0
	7	—	0.0
	8	—	11.2
IC401	1	14.6	—
	2	0.0	—
	3	12.1	—
IC402	1	6.0	—
	2	6.0	—
	3	6.0	—
	4	0.0	—
	5	6.0	—
	6	6.0	—
	7	6.0	—
	8	12.0	—
IC602	1	—	6.0
	2	—	6.0
	3	—	6.0
	4	—	6.0
	5	—	0.0
	6	—	0.0
	7	—	0.0
	8	—	6.0
	9	—	6.0
	10	—	6.0
	11	—	6.0
	12	—	0.0
	13	—	11.9
	14	—	12.0
IC603	1	—	6.0
	2	—	6.0
	3	—	5.9
	4	—	0.0
	5	—	5.9
	6	—	6.0
	7	—	6.0
	8	—	12.0
IC604	1	—	5.8
	2	—	5.8
	3	—	5.8
	4	—	0.0
	5	—	5.8
	6	—	5.8
	7	—	5.8
	8	—	11.5
IC605	1	—	0.0
	2	—	0.1
	3	—	0.0
	4	—	11.9
	5	—	0.0
	6	—	0.0
	7	—	11.9
	8	—	0.0
	9	—	0.0
	10	—	6.7
	11	—	11.5
	12	—	0.0
	13	—	0.0
	14	—	0.0
IC605	15	—	0.0
	16	—	11.9
	17	—	12.0
	18	—	11.9
	19	—	0.1
	20	—	5.1
IC607	1	—	5.9
	2	—	5.9
	3	—	5.8
	4	—	0.0
	5	—	5.8
	6	—	5.9
	7	—	5.9
	8	—	11.8
IC608	1	—	5.9
	2	—	5.9
	3	—	5.9
	4	—	5.9
	5	—	5.9
	6	—	0.0
	7	—	0.0
	8	—	0.0
	9	—	0.0
	10	—	0.0
	11	—	0.0
	12	—	6.0
	13	—	5.9
	14	—	6.0
	15	—	5.9
	16	—	12.0
IC609	1	—	5.9
	2	—	6.0
	3	—	6.0
	4	—	6.0
	5	—	6.0
	6	—	0.0
	7	—	0.0
	8	—	0.0
	9	—	0.0
	10	—	0.0
	11	—	0.0
	12	—	6.0
	13	—	5.9
	14	—	6.0
	15	—	6.0
	16	—	12.0
IC610	1	—	0.0
	2	—	2.4
	3	—	3.6
	4	—	0.0
	5	—	5.4
	6	—	5.7
	7	—	0.0
	8	—	11.6
IC611	1	—	5.8
	2	—	5.8
	3	—	5.8
	4	—	0.0
	5	—	5.8
	6	—	5.8
	7	—	5.8
	8	—	11.6
TRANSISTOR			
Q7	B	—	0.2
	C	—	0.0
	E	—	0.0
Q8	B	—	0.2
	C	—	0.0
	E	—	0.0
Q9	B	—	0.2
	C	—	0.0
	E	—	0.0
Q10	B	—	0.2
	C	—	0.0
	E	—	0.0
Q11	B	—	0.7
	C	—	0.0
	E	—	0.0

— DC Voltage (2/2) —

SYMBOL	No.	REC	PB
Q12	B	—	0.7
	C	—	0.0
	E	—	0.0
Q17	B	—	0.0
	C	—	5.5
	E	—	0.0
Q18	B	—	0.0
	C	—	5.5
	E	—	0.0
Q19	B	—	0.0
	C	—	9.0
	E	—	0.0
Q20	B	—	0.0
	C	—	9.0
	E	—	0.0
Q21	B	—	11.9
	C	—	0.0
	E	—	12.0
Q22	B	—	11.9
	C	—	0.0
	E	—	12.0
Q23	B	—	—
	C	—	—
	E	—	—
Q24	B	—	—
	C	—	—
	E	—	—
Q25	B	—	11.9
	C	—	0.2
	E	—	12.0
Q26	B	—	11.9
	C	—	0.2
	E	—	12.0
Q27	B	—	11.9
	C	—	0.0
	E	—	12.0
Q28	B	—	11.9
	C	—	0.0
	E	—	12.0
Q29	B	—	11.9
	C	—	0.0
	E	—	12.0
Q30	B	—	11.9
	C	—	0.0
	E	—	12.0
Q34	B	—	11.9
	C	—	12.0
	E	—	11.2
Q35	B	—	-12.2
	C	—	-12.3
	E	—	-11.5
Q36	B	—	.
	C	—	.
	E	—	.
Q37	1	—	5.3
	2	—	0.0
	3	—	0.3
	4	—	5.3
	5	—	0.0
	6	—	0.3
Q38	1	—	5.3
	2	—	0.0
	3	—	0.3
	4	—	5.3
	5	—	0.0
	6	—	0.3

SYMBOL	No.	REC	PB
Q39	B	—	0.2
	C	—	0.0
	E	—	0.0
Q40	B	—	0.2
	C	—	0.0
	E	—	0.0
Q41	B	—	11.5
	C	—	0.0
	E	—	11.5
Q42	B	—	11.5
	C	—	0.0
	E	—	11.5
Q43	B	—	—
	C	—	—
	E	—	—
Q407	B	0.4	—
	C	8.3	—
	E	0.3	—
Q408	B	0.5	—
	C	8.7	—
	E	0.4	—
Q409	B	0.4	—
	C	8.3	—
	E	0.3	—
Q410	B	0.5	—
	C	8.7	—
	E	0.4	—
Q411	B	0.7	—
	C	0.1	—
	E	0.0	—
Q412	B	0.7	—
	C	0.1	—
	E	0.0	—
Q413	B	—	—
	C	—	—
	E	—	—
Q414	B	9.3	—
	C	12.1	—
	E	8.7	—
Q415	B	0.6	—
	C	11.3	—
	E	0.9	—
Q416	B	0.7	—
	C	11.4	—
	E	1.0	—
Q417	B	0.6	—
	C	11.3	—
	E	0.9	—
Q418	B	0.6	—
	C	11.4	—
	E	1.0	—
Q419	B	0.8	—
	C	0.1	—
	E	0.0	—
Q420	B	0.8	—
	C	0.1	—
	E	0.0	—
Q421	B	0.8	—
	C	0.0	—
	E	0.0	—
Q422	B	0.8	—
	C	0.0	—
	E	0.0	—
Q423	B	0.8	—
	C	0.0	—
	E	0.0	—

SYMBOL	No.	REC	PB
Q424	B	0.8	—
	C	0.0	—
	E	0.0	—
Q425	B	11.2	—
	C	11.9	—
	E	11.9	—
Q426	B	-1.1	—
	C	8.8	—
	E	0.2	—
Q427	B	2.0	—
	C	8.9	—
	E	3.5	—
Q428	B	6.0	—
	C	12.0	—
	E	5.4	—
Q429	B	6.0	—
	C	12.0	—
	E	5.4	—
Q431	B	6.7	—
	C	0.1	—
	E	0.0	—
Q432	B	6.5	—
	C	0.1	—
	E	0.0	—
Q601	B	—	0.1
	C	—	0.0
	E	—	0.0
Q602	B	—	11.9
	C	—	0.0
	E	—	12.0
Q603	B	—	0.0
	C	—	0.0
	E	—	0.0
Q604	B	—	11.9
	C	—	0.0
	E	—	12.0
Q605	B	—	11.5
	C	—	0.0
	E	—	0.0
Q606	B	—	0.0
	C	—	11.5
	E	—	11.5
Q607	B	—	—
	C	—	—
	E	—	—
Q608	B	—	-0.2
	C	—	0.0
	E	—	0.0
Q609	B	—	11.5
	C	—	-0.2
	E	—	11.6
Q610	B	—	-1.1
	C	—	0.0
	E	—	0.0
Q611	B	—	0.0
	C	—	11.8
	E	—	0.0
Q612	B	—	11.8
	C	—	11.9
	E	—	11.2
Q613	B	—	11.2
	C	—	0.0
	E	—	0.0
Q614	B	—	12.0
	C	—	0.0
	E	—	12.0

SYMBOL	No.	REC	PB
Q615	B	—	0.0
	C	—	12.0
	E	—	12.0
CONNECTOR			
CN1	1	0.0	—
	2	0.0	—
	3	0.0	—
	4	0.0	—
CN2	1	14.9	—
	2	0.0	—
CN3	1	0.0	—
	2	0.0	—
CN4	1	—	4.7
	2	—	0.0
	3	—	0.0
	4	—	4.5
CN5	1	—	0.0
	2	—	0.0
	3	—	0.0
CN6	1	—	0.0
	2	—	0.0
	3	—	0.0
CN7	1	—	15.0
	2	—	0.0
	3	—	-14.6
CN8	1	—	0.0
	2	—	0.0
	3	—	0.0
	4	—	0.0
	5	—	0.0
CN9	1	—	0.0
	2	—	0.0
	3	—	0.0
	4	—	0.0
CN10	1	—	0.0
	2	—	0.0
	3	—	0.0
	4	—	0.0
	5	—	0.0
CN11	1	—	5.0
	2	—	0.0
CN12	1	—	5.1
	2	—	0.0
	3	—	0.1
	4	—	0.0
	5	—	0.0
	6	—	0.0
	7	—	0.0
	8	—	0.0

6

4.43 AUDIO-1 CIRCUIT BOARD

5

4

3

2

1

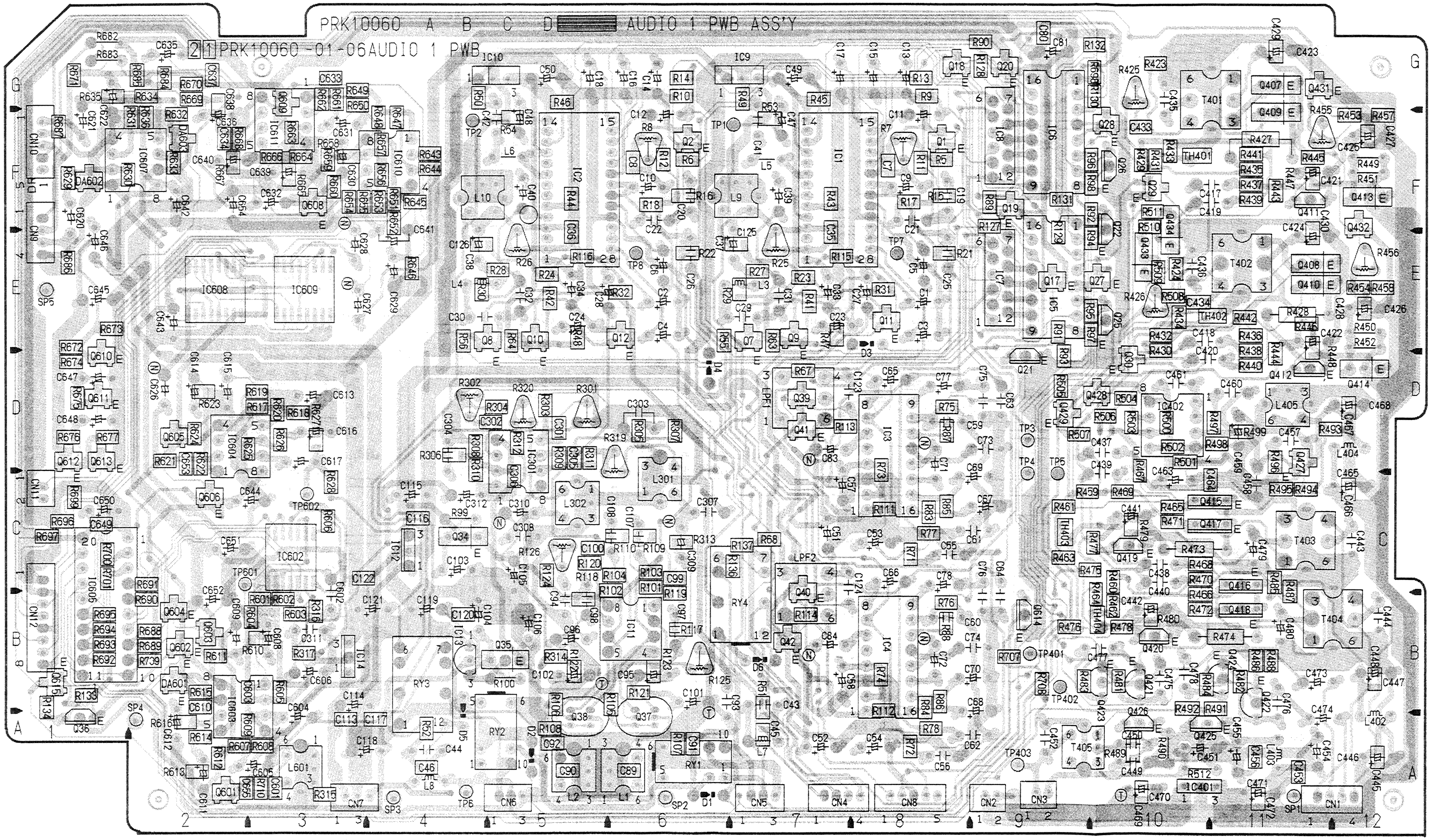
PRK10060 A B C D AUDIO 1 PWB ASS'Y
2 1 PRK10060-01-06AUDIO 1 PWB
IC1
IC2
IC3
IC4
IC5
IC6
IC7
IC8
IC9
IC10
IC11
IC12
IC13
IC14
IC301
IC401
IC402
IC601
IC602
IC603
IC604
IC606
IC607
IC608
IC609
IC610
IC611
RY1
RY2
RY3
RY4
LPF1
LPF2
T401
T402
T403
T404
T405
CN1
CN2
CN3
CN4
CN5
CN6
CN7
CN8
CN9
CN10
CN11
CN12
SP1
SP2
SP3
SP4
SP5
TP1
TP2
TP3
TP4
TP5
TP6
TP7
TP8
TP401
TP402
TP403
TP601
TP602

A	B	C	D	E	F	G	H

2 1 AUDIO-1 4-53 4-53

4.44 AUDIO-2 SCHEMATIC DIAGRAM

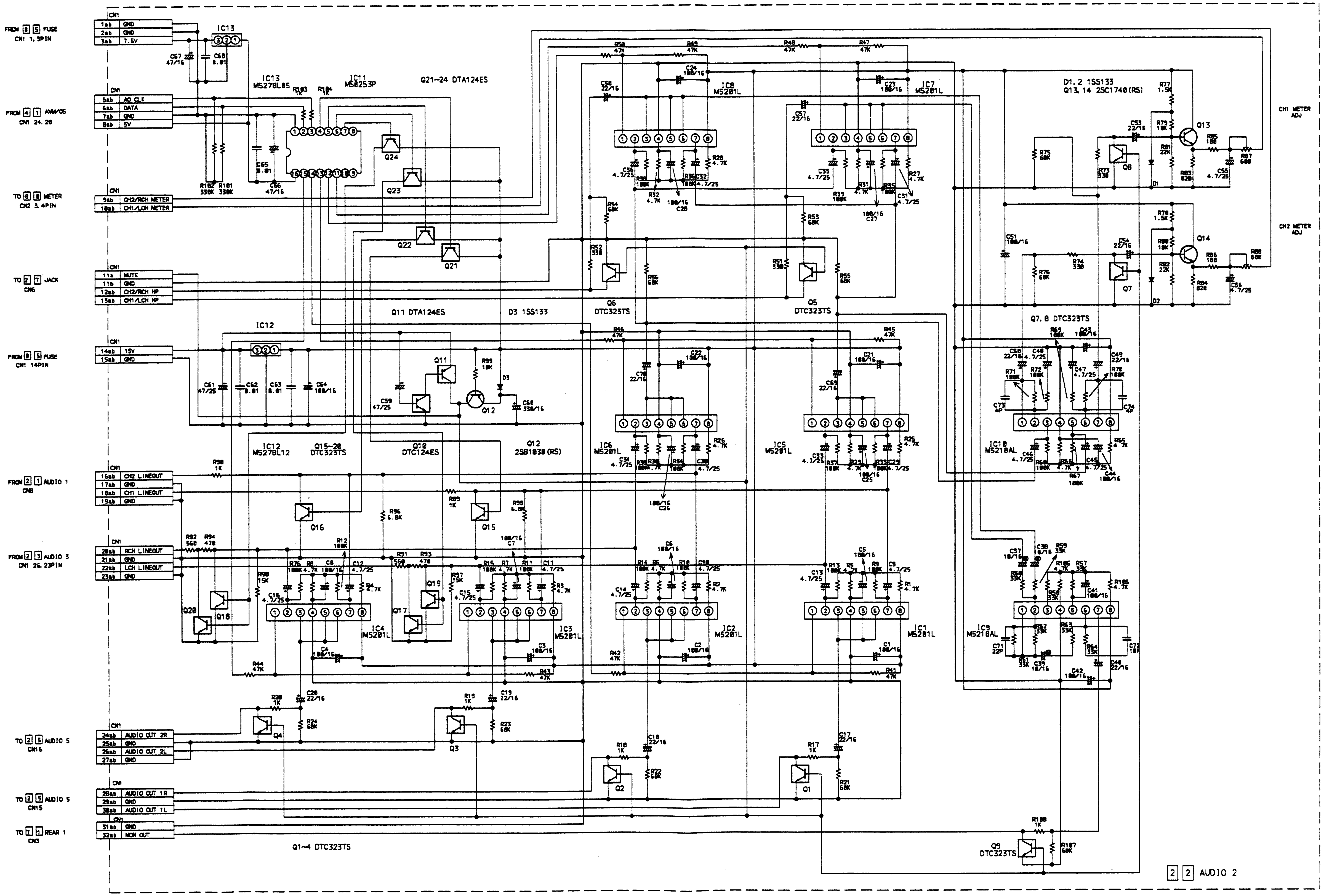

FROM 8 5 FUSE CN1 1, 3PIN
CN1 1ab GND 2ab GND 3ab 7.5V
FROM 4 1 AVM/OS CN1 24, 28
CN1 5ab AO CLK 6ab DATA 7ab GND 8ab 5V
TO 8 8 METER CN2 3, 4PIN
CN1 9ab CH2/RCH METER 10ab CH1/LCH METER
TO 2 7 JACK CN6
CN1 11a MUTE 11b GND 12ab CH2/RCH HP 13ab CH1/LCH HP
FROM 8 5 FUSE CN1 14PIN
CN1 14ab 15V 15ab GND
FROM 2 1 AUDIO 1 CN8
CN1 16ab CH2 LINEOUT 17ab GND 18ab CH1 LINEOUT 19ab GND
FROM 2 3 AUDIO 3 CN1 26, 23PIN
CN1 20ab RCH LINEOUT 21ab GND 22ab LCH LINEOUT 23ab GND
TO 2 5 AUDIO 5 CN16
CN1 24ab AUDIO OUT 2R 25ab GND 26ab AUDIO OUT 2L 27ab GND
TO 2 5 AUDIO 5 CN15
CN1 28ab AUDIO OUT 1R 29ab GND 30ab AUDIO OUT 1L
TO 7 1 REAR 1 CN3
CN1 31ab GND 32ab MON OUT
IC13
IC13 M5278L05
IC11 M58253P
Q21~24 DTA124ES
IC8 M5201L
IC7 M5201L
D1, 2 1SS133
Q13, 14 2SC1740(RS)
CH1 METER ADJ
CH2 METER ADJ
Q6 DTC323TS
Q5 DTC323TS
Q11 DTA124ES
D3 1SS133
Q7, 8 DTC323TS
IC12
IC6 M5201L
IC5 M5201L
IC10 M5218AL
IC12 M5278L12
Q15~20 DTC323TS
Q10 DTC124ES
Q12 2SB1030(RS)
IC4 M5201L
IC3 M5201L
IC2 M5201L
IC1 M5201L
IC9 M5218AL
Q1~4 DTC323TS
Q9 DTC323TS
2 2 AUDIO 2

6
5
4
3
2
1

A B C D E F G H

4.45 AUDIO-2 CIRCUIT BOARD

— DC Voltage —

SYMBOL No.		REC	PB
INTEGRATED CIRCUIT			
IC1	1 2 3 4 5 6 7 8	— — — — — — — —	10.3 6.0 6.0 0.0 6.0 6.0 6.0 12.0
IC2	1 2 3 4 5 6 7 8	— — — — — — — —	10.3 6.0 6.1 0.0 6.1 6.1 6.0 12.0
IC3	1 2 3 4 5 6 7 8	— — — — — — — —	12.0 6.0 6.0 0.0 6.0 6.0 6.0 12.0
IC4	1 2 3 4 5 6 7 8	— — — — — — —	12.0 6.0 6.1 0.0 6.1 6.1 6.0 12.0
IC5	1 2 3 4 5 6 7 8	— — — — — — — —	10.3 6.0 6.1 0.0 6.1 6.1 6.0 12.0
IC6	1 2 3 4 5 6 7 8	— — — — — — — —	10.3 6.0 6.1 0.0 6.1 6.1 6.0 12.0
IC7	1 2 3 4 5 6 7 8	— — — — — — — —	12.0 6.0 6.1 0.0 6.1 6.1 6.0 12.0
IC8	1 2 3 4 5 6 7 8	— — — — — — — —	9.5 6.0 6.0 0.0 6.0 6.0 6.0 12.0
IC9	1 2 3 4 5 6 7 8	— — — — — — — —	6.0 6.0 6.0 0.0 6.0 6.0 6.0 12.0
IC10	1 2 3 4 5 6 7	— — — — — — —	6.0 6.0 6.0 0.0 6.0 6.0 6.0
IC10	8	—	12.0
IC11	1 2 3 4 5 6 7 8 9 10 11 12 13 14 15 16	— — — — — — — — — — — — — — — —	0.0 0.1 0.0 12.0 0.0 0.1 0.1 0.3 0.3 0.2 11.9 0.0 0.0 0.0 11.9 5.1
IC12	1 2 3	15.2 0.0 12.0	15.2 0.0 12.0
IC13	1 2 3	7.4 0.0 5.1	7.4 0.0 5.1
TRANSISTOR			
Q1	B C E	— — —	-0.3 0.0 0.0
Q2	B C E	— — —	-0.3 0.0 0.0
Q3	B C E	— — —	-0.3 0.0 0.0
Q4	B C E	— — —	-0.3 0.0 0.0
Q5	B C E	— — —	-0.4 0.0 0.0
Q6	B C E	— — —	-0.4 0.0 0.0
Q7	B C E	— — —	-0.4 0.0 0.0
Q8	B C E	— — —	-0.4 0.0 0.0
Q9	B C E	— — —	-0.4 0.0 0.0
Q10	B C E	— — —	0.0 15.1 0.0
Q11	B C E	— — —	15.1 -0.4 15.2
Q12	B C E	— — —	12.0 -0.4 11.9
Q13	B C E	— — —	0.5 12.0 0.5
Q14	B C E	— — —	0.5 12.0 0.0
Q15	B C E	— — —	0.0 0.0 0.0
Q16	B C E	— — —	12.0 0.0 0.0
Q17	B C E	— — —	12.0 0.0 0.0
Q18	B C E	— — —	12.0 0.0 0.0
Q19	B C E	— — —	12.0 0.0 0.0
Q20	B C E	— — —	11.9 0.0 0.0
Q21	B C E	— — —	12.0 -0.2 12.3
Q22	B C E	— — —	0.1 12.0 12.0
Q23	B C E	— — —	0.1 12.0 12.0
Q24	B C E	— — —	0.1 12.0 12.0
CONNECTOR			
CN1	1AB 2AB 3AB	— — —	0.0 0.0 7.4
	5AB 6AB 7AB 8AB	— — — —	0.0 0.1 0.0 5.1
	9AB 10AB	— —	0.0 0.2
	11A 11B 12AB 13AB	— — — —	-0.3 0.0 0.0 0.0
	14AB 15AB	— —	15.2 0.0
	16AB 17AB 18AB 19AB	— — — —	0.0 0.0 0.0 0.0
	20AB 21AB 22AB 23AB	— — — —	0.0 0.0 0.0 0.0
	24AB 25AB 26AB 27AB	— — — —	0.0 0.0 0.0 0.0
	28AB 29AB 30AB	— — —	0.0 0.0 0.0
	31AB 32AB	— —	0.0 0.0

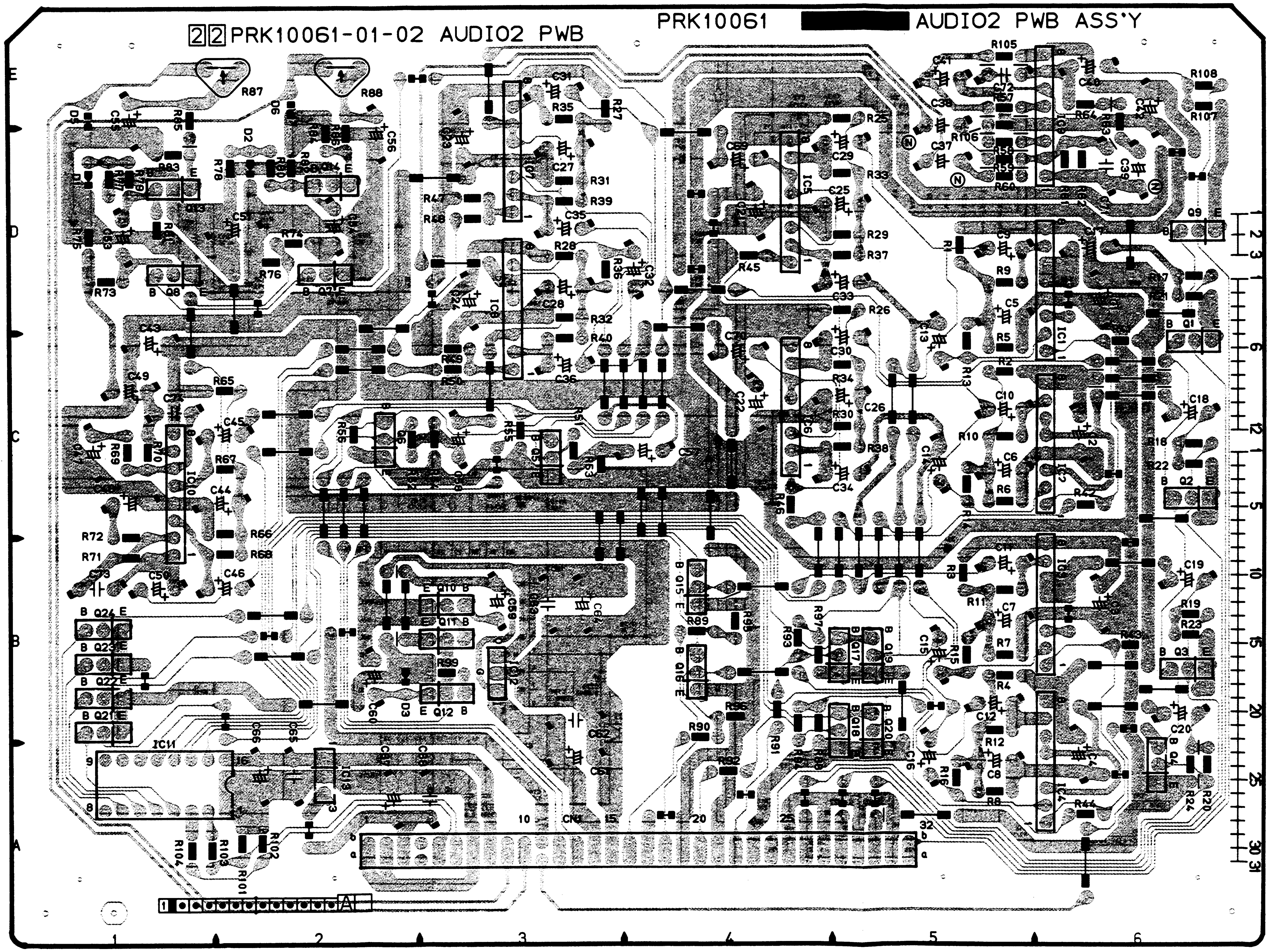
22 PRK10061-01-02 AUDIO2 PWB
PRK10061
[redacted]
AUDIO2 PWB ASS'Y
IC1
IC2
IC3
IC4
IC5
IC6
IC7
IC8
IC9
IC10
IC11
IC12
IC13
Q1
Q2
Q3
Q4
Q8
Q9
Q10
Q11
Q12
Q15
Q16
Q17
Q18
Q19
Q20
Q21
Q22
Q23
Q24
CN1
E
D
C
B
A
1
2
3
4
5
6

4.46 AUDIO-3 SCHEMATIC DIAGRAM

— DIAGRAM (1/2) —

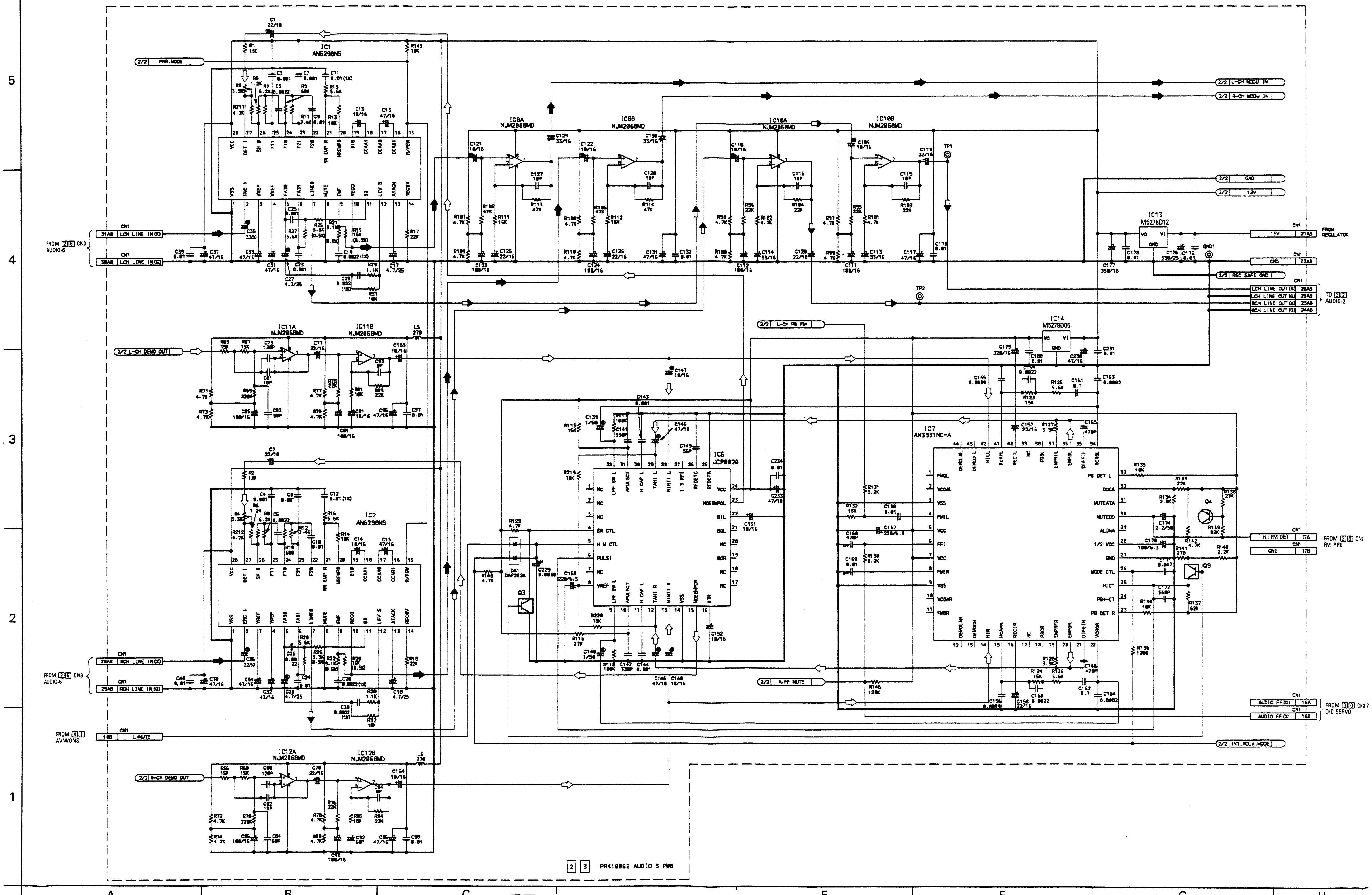
IC1 AN6298NS
IC2 AN6298NS
IC8A NJM2068MD
IC8B NJM2068MD
IC10A NJM2068MD
IC10B NJM2068MD
IC11A NJM2068MD
IC11B NJM2068MD
IC12A NJM2068MD
IC12B NJM2068MD
IC13 M5278D12
IC14 M5278D05
IC6 JCP8029
IC7 AN3931NC-A
DA1 DAP202K
Q3
Q4
Q9
TP1
TP2
GND1
L5 270
L6 270
2/2 PNR.MODE
2/2 L-CH MODU IN
2/2 R-CH MODU IN
2/2 GND
2/2 12V
2/2 REC SAFE GND
2/2 L-CH DEMO OUT
2/2 R-CH DEMO OUT
2/2 L-CH PB FM
2/2 A.FF MUTE
2/2 INT.POLA.MODE
CN1
31A8 LCH LINE IN(H)
30A8 LCH LINE IN(G)
28A8 RCH LINE IN(H)
29A8 RCH LINE IN(G)
16B L:MUTE
FROM 2 6 CN3 AUDIO-6
FROM 4 1 AVM/ONS.
15V 21A8
GND 22A8
FROM REGULATOR
LCH LINE OUT(H) 26A8
LCH LINE OUT(G) 25A8
RCH LINE OUT(H) 23A8
RCH LINE OUT(G) 24A8
TO 2 2 AUDIO-2
H:FM DET 17A
GND 17B
FROM 2 0 CN2 FM PRE
AUDIO FF(G) 16A
AUDIO FF(H) 16B
FROM 3 0 CN7 D/C SERVO
2 3 PRK10062 AUDIO 3 PWB
A
B
C
D
E
F
G
H
1
2
3
4
5
6

— DIAGRAM (2/2) —

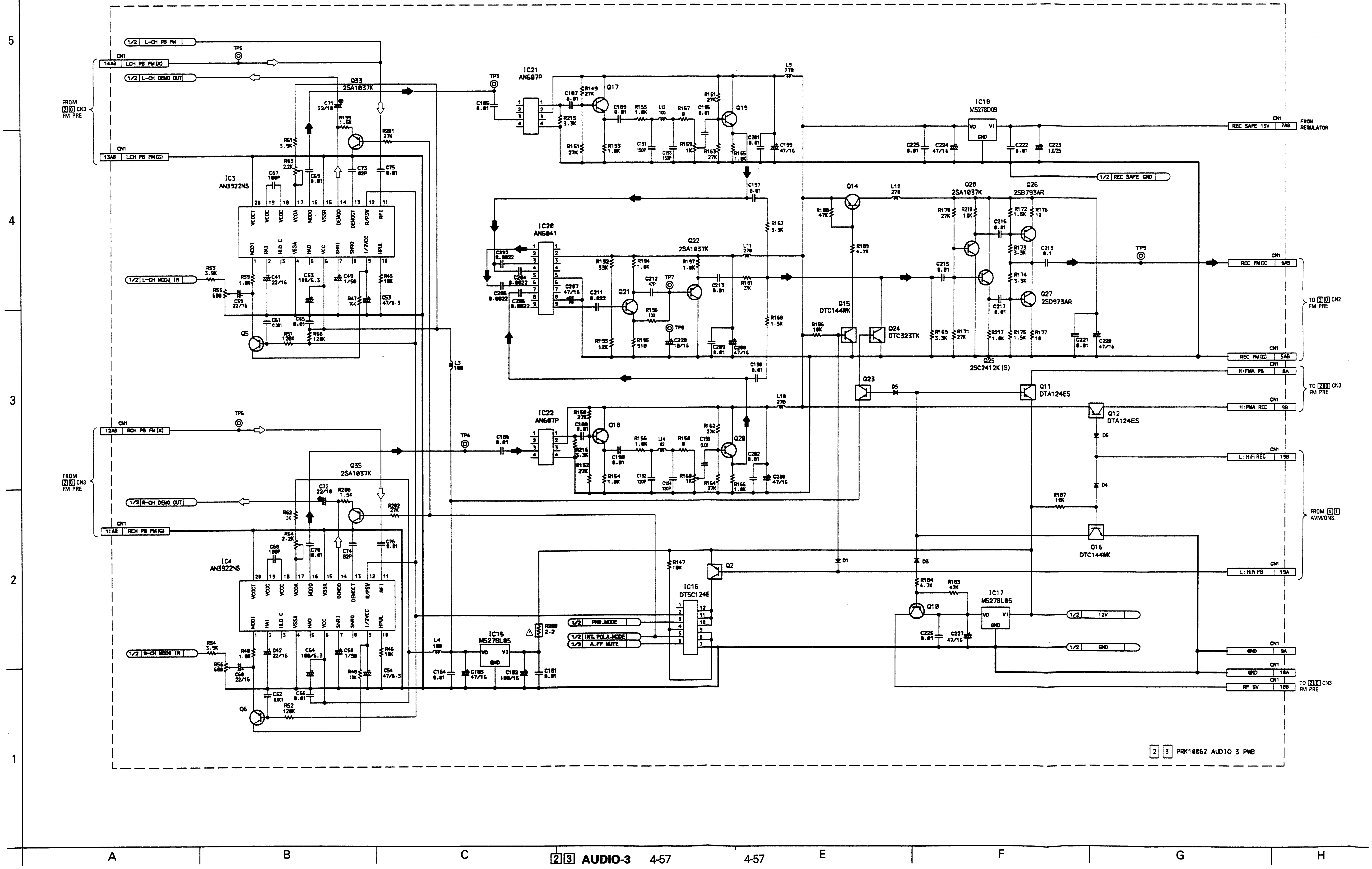
FROM 20 CN3 FM PRE
1/2 L-CH PB FM
CN1 14AB LCH PB FM(X)
1/2 L-CH DEMO OUT
CN1 13AB LCH PB FM(G)
TP5
Q33 2SA1037K
IC3 AN3922NS
1/2 L-CH MODU IN
Q5
TP3
IC21 AN607P
Q17
Q19
L9 270
IC18 M5278D09
CN1 REC SAFE 15V 7AB
FROM REGULATOR
1/2 REC SAFE GND
IC20 AN6041
Q22 2SA1037K
Q14
Q28 2SA1037K
Q26 2SB793AR
TP9
CN1 REC FM(X) 6AB
TO 20 CN2 FM PRE
Q27 2SD973AR
Q15 DTC144WK
Q24 DTC323TK
Q25 2SC2412K (S)
CN1 REC FM(G) 5AB
CN1 H:FMA PB 8A
TO 20 CN3 FM PRE
Q23
Q11 DTA124ES
CN1 H:FMA REC 9B
Q12 DTA124ES
L3 100
IC22 AN607P
Q18
Q20
TP4
TP6
FROM 20 CN3 FM PRE
CN1 12AB RCH PB FM(X)
Q35 2SA1037K
1/2 R-CH DEMO OUT
CN1 11AB RCH PB FM(G)
CN1 L:HiFi REC 15B
FROM 41 AVM/ONS.
Q16 DTC144WK
CN1 L:HiFi PB 15A
IC4 AN3922NS
Q2
IC16 DT5C124E
Q10
IC17 M5278L05
1/2 12V
1/2 GND
1/2 PWR.MODE
1/2 INT. POLA.MODE
1/2 A.FF MUTE
IC15 M5278L05
1/2 R-CH MODU IN
Q6
CN1 GND 9A
CN1 GND 18A
CN1 RF 5V 18B
TO 20 CN3 FM PRE
23 PRK10062 AUDIO 3 PWB
1
2
3
4
5
6
A
B
C
D
E
F
G
H

— DC Voltage (1/2) —

SYMBOL	No.	REC	PB
INTEGRATED CIRCUIT			
IC1	1	—	0.0
	2	—	6.1
	3	—	6.1
	4	—	6.1
	5	—	6.1
	6	—	6.1
	7	—	6.1
	8	—	0.0
	9	—	6.1
	10	—	6.1
	11	—	6.1
	12	—	0.9
	13	—	0.4
	14	—	0.1
	15	—	0.0
	16	—	6.1
	17	—	6.1
	18	—	6.1
	19	—	6.1
	20	—	6.1
	21	—	6.1
	22	—	6.1
	23	—	6.1
	24	—	6.1
	25	—	6.1
	26	—	6.1
	27	—	6.1
	28	—	12.1
IC2	1	—	0.0
	2	—	6.1
	3	—	6.1
	4	—	6.1
	5	—	6.1
	6	—	6.1
	7	—	6.1
	8	—	0.0
	9	—	6.1
	10	—	6.1
	11	—	6.1
	12	—	0.9
	13	—	0.4
	14	—	0.1
	15	—	0.0
	16	—	6.1
	17	—	6.0
	18	—	6.1
	19	—	6.1
	20	—	6.1
	21	—	6.1
	22	—	6.1
	23	—	6.1
	24	—	6.1
	25	—	6.1
	26	—	6.1
	27	—	6.1
	28	—	12.1
IC3	1	—	2.6
	2	—	3.0
	3	—	2.6
	4	—	0.0
	5	—	2.5
	6	—	5.1
	7	—	2.6
	8	—	2.6
	9	—	2.6
	10	—	0.0
	11	—	3.1
	12	—	0.0
	13	—	3.2
	14	—	2.5
	15	—	0.0
	16	—	3.9
	17	—	4.0
	18	—	4.4
	19	—	4.4
	20	—	0.0
IC4	1	—	2.6
	2	—	3.0
	3	—	2.5
	4	—	0.0
	5	—	0.0
	6	—	5.1
	7	—	2.6
	8	—	2.6
	9	—	2.6
IC4	10	—	0.0
	11	—	3.1
	12	—	0.0
	13	—	3.2
	14	—	2.5
	15	—	0.0
	16	—	3.9
	17	—	4.0
	18	—	4.4
	19	—	4.4
	20	—	0.0
IC7	1	—	3.7
	2	—	3.2
	3	—	0.0
	4	—	2.6
	5	—	5.1
	6	—	5.1
	7	—	5.1
	8	—	2.6
	9	—	0.0
	10	—	2.9
	11	—	3.7
	12	—	4.3
	13	—	2.5
	14	—	2.6
	15	—	2.6
	16	—	2.6
	17	—	0.0
	18	—	2.6
	19	—	2.6
	20	—	2.6
	21	—	0.0
	22	—	2.6
	23	—	4.3
	24	—	0.0
	25	—	0.5
	26	—	5.0
	27	—	0.0
	28	—	2.6
	29	—	0.2
	30	—	0.0
	31	—	5.1
	32	—	0.5
	33	—	4.3
	34	—	2.6
	35	—	2.6
	36	—	2.6
	37	—	2.6
	38	—	2.6
	39	—	0.0
	40	—	2.6
	41	—	2.6
	42	—	2.6
	43	—	2.1
	44	—	4.3
IC8	1	—	6.1
	2	—	6.1
	3	—	6.0
	4	—	0.0
	5	—	6.1
	6	—	6.1
	7	—	6.1
	8	—	12.1
IC10	1	—	6.0
	2	—	6.1
	3	—	6.0
	4	—	0.0
	5	—	6.1
	6	—	6.1
	7	—	6.1
	8	—	12.1
IC11	1	—	6.1
	2	—	6.1
	3	—	6.1
	4	—	0.0
	5	—	6.0
	6	—	6.0
	7	—	6.0
	8	—	12.0
IC12	1	—	6.1
	2	—	6.1
	3	—	6.0
	4	—	0.0
	5	—	6.0
	6	—	6.0
	7	—	6.0
	8	—	12.0
IC13	1	15.0	15.0
	2	0.0	0.0
	3	12.1	12.1
IC14	1	5.1	5.1
	2	0.0	0.0
	3	11.9	11.9
IC15	1	5.1	5.1
	2	0.0	0.0
	3	12.0	12.0
IC16	1	—	0.0
	2	—	0.0
	3	—	0.0
	4	—	0.0
	5	—	5.1
	6	—	5.1
	7	—	0.0
	8	—	0.0
	9	—	0.0
	10	—	12.0
	11	—	0.0
	12	—	0.0
IC17	1	12.1	12.1
	2	0.0	0.0
	3	5.1	5.1
IC18	1	14.9	0.0
	2	0.0	0.0
	3	8.3	0.0
IC20	1	5.9	0.0
	2	8.1	0.0
	3	2.2	0.0
	4	5.6	0.0
	5	0.0	0.0
	6	5.6	0.0
	7	2.2	0.0
	8	5.6	0.0
	9	5.7	0.0
IC21	1	4.7	0.0
	2	8.2	0.0
	3	2.2	0.0
	4	0.0	0.0
IC22	1	4.7	0.0
	2	8.2	0.0
	3	2.2	0.0
	4	0.0	0.0

— DC Voltage (2/2) —

SYMBOL No.		REC	PB
TRANSISTOR			
Q2	B C E	12.0 0.0 12.1	0.1 12.1 12.1
Q3	B C E	– – –	5.1 0.0 0.0
Q4	B C E	– – –	4.5 5.1 5.1
Q5	B C E	– – –	2.1 2.6 2.6
Q6	B C E	– – –	2.1 2.6 2.6
Q9	B C E	– – –	5.1 0.5 0.5
Q10	B C E	5.1 0.0 5.1	4.4 5.0 5.1
Q11	B C E	12.0 -0.3 12.1	0.0 12.0 12.1
Q12	B C E	0.6 8.2 8.2	0.0 0.0 0.0
Q14	B C E	7.5 8.1 8.2	0.0 0.0 0.0
Q15	B C E	6.8 0.0 0.0	0.0 0.0 0.0
Q16	B C E	0.7 12.0 0.0	9.9 0.0 0.0
Q17	B C E	3.9 8.1 3.3	0.0 0.0 0.0
Q18	B C E	3.9 8.1 3.3	0.0 0.0 0.0
Q19	B C E	3.9 8.1 3.3	0.0 0.0 0.0
Q20	B C E	3.9 8.1 3.2	0.0 0.0 0.0
Q21	B C E	2.1 6.5 1.5	0.0 0.0 0.0
Q22	B C E	1.5 0.0 2.2	0.0 0.0 0.0
Q23	B C E	5.1 0.0 5.1	0.6 5.1 5.1
Q24	B C E	0.0 0.0 0.0	5.1 0.0 0.0
Q25	B C E	4.1 7.9 3.5	0.0 0.0 0.0
Q26	B C E	6.8 3.8 7.5	0.0 0.0 0.0
Q27	B C E	1.1 3.8 0.4	0.0 0.0 0.0
Q28	B C E	4.1 0.0 4.7	0.0 0.0 0.0
Q33	B C E	– – –	5.1 0.0 2.5
Q35	B C E	– – –	5.1 0.0 2.5
CONNECTOR			
CN1	31AB	–	6.1
	30AB	–	0.0
	28AB	–	6.1
	29AB	–	0.0
	18B	–	0.1
	21AB	–	15.2
	22AB	–	0.0
	26AB 25AB 23AB 24AB	– – – –	0.0 0.0 0.0 0.0
	7A	–	0.0
	7B	–	0.0
	15A	–	0.0
	15B	–	0.0
	14AB	–	0.0
	13AB	–	0.0
	12AB	–	0.1
	11AB	–	0.0
	7AB	–	0.1
	6AB	-	0.0
	5AB	–	0.0
	8A	–	12.0
	9B	–	-0.2
	19B	–	9.7
	19A	–	0.1
	9A	–	0.0
	10A	–	0.0
	10B	–	5.0

4.47 AUDIO-3 CIRCUIT BOARD

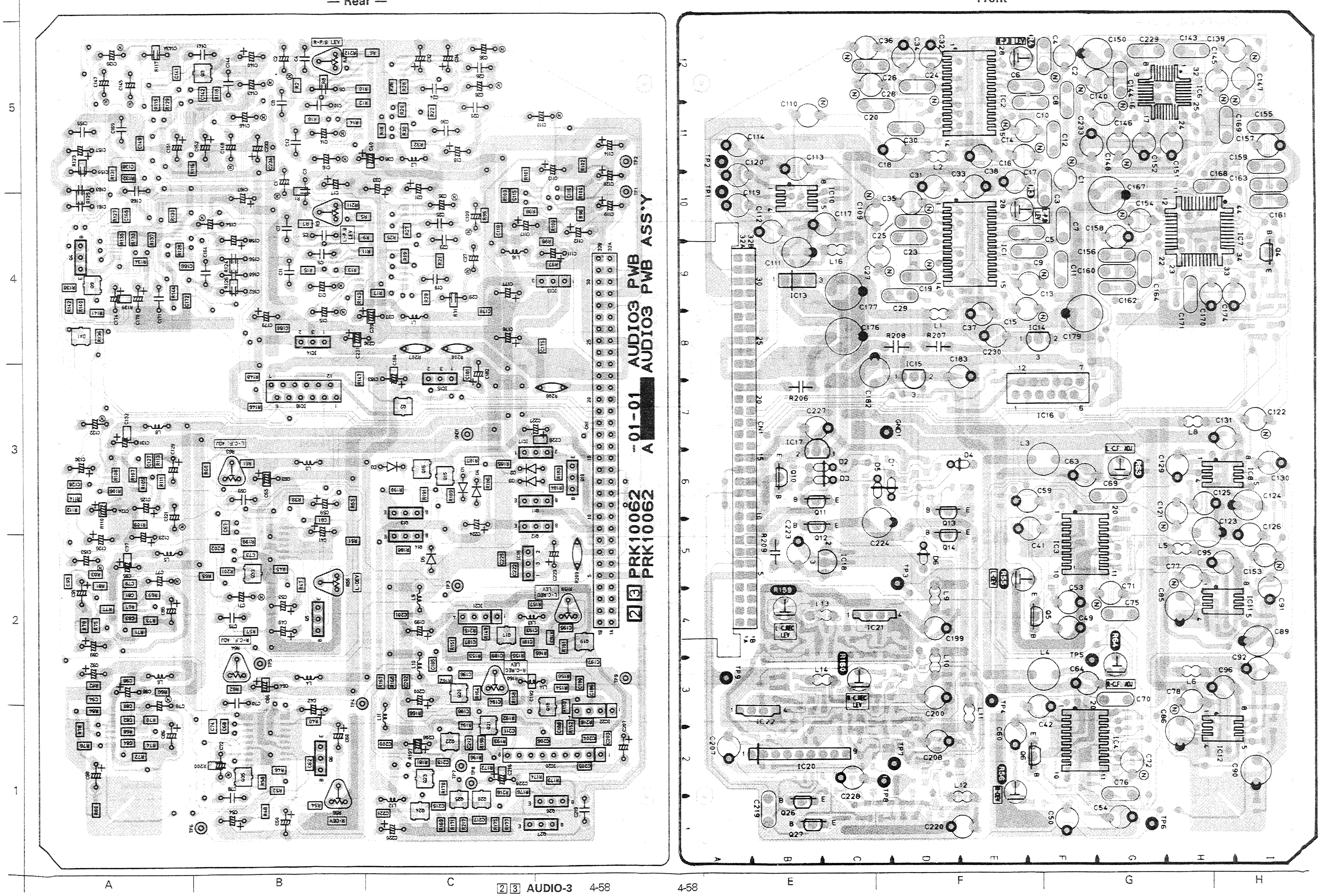
— Rear —
— Front —
2 3 PRK10062 A 01-01 AUDIO03 PWB
PRK10062 AUDIO03 PWB ASS'Y
L-C.F. ADJ
R-C.F. ADJ
L-C.REC LEV
R-C.REC LEV
L-DEV
R-DEV
L-P.B LEV
R-P.B LEV
CN1
IC1
IC2
IC3
IC4
IC5
IC6
IC7
IC8
IC10
IC11
IC12
IC13
IC14
IC15
IC16
IC17
IC18
IC20
IC21
IC22
TP1
TP2
TP3
TP4
TP5
TP6
TP7
TP8
TP9
GND1
1
2
3
4
5
6
A
B
C
E
F
G
H

4.48 XLR (AUDIO-4, -5) SCHEMATIC DIAGRAM

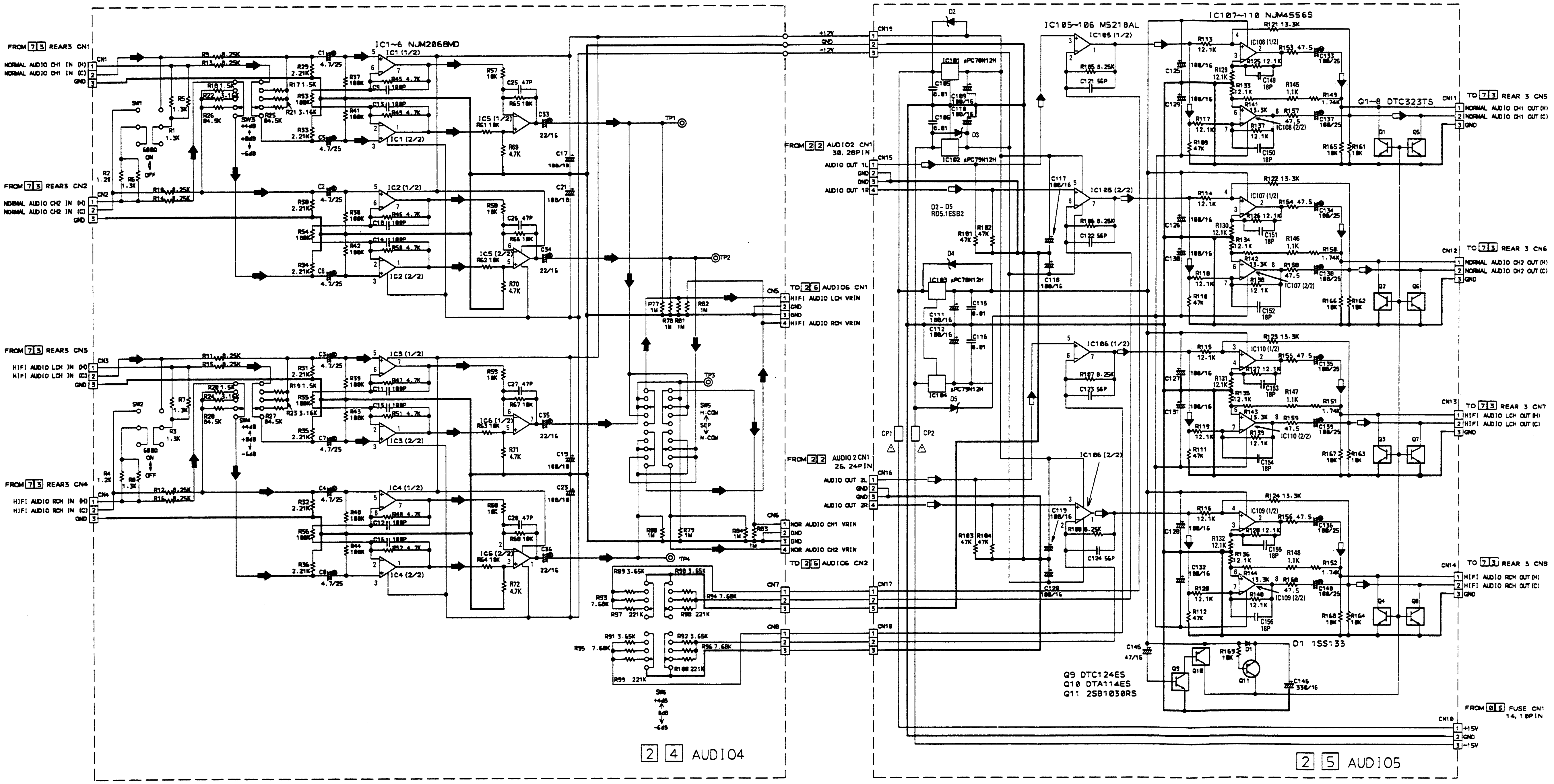
FROM 7 3 REAR3 CN1
NORMAL AUDIO CH1 IN (H)
NORMAL AUDIO CH1 IN (C)
GND
FROM 7 3 REAR3 CN2
NORMAL AUDIO CH2 IN (H)
NORMAL AUDIO CH2 IN (C)
FROM 7 3 REAR3 CN3
HIFI AUDIO LCH IN (H)
HIFI AUDIO LCH IN (C)
FROM 7 3 REAR3 CN4
HIFI AUDIO RCH IN (H)
HIFI AUDIO RCH IN (C)
IC1~6 NJM2068MD
TP1
TP2
TP3
TP4
SW5
SW6
+4dB
0dB
-6dB
TO 2 6 AUDIO6 CN1
HIFI AUDIO LCH VRIN
HIFI AUDIO RCH VRIN
NOR AUDIO CH1 VRIN
NOR AUDIO CH2 VRIN
TO 2 6 AUDIO6 CN2
FROM 2 2 AUDIO2 CN1 30, 28PIN
AUDIO OUT 1L
AUDIO OUT 1R
FROM 2 2 AUDIO2 CN1 26, 24PIN
AUDIO OUT 2L
AUDIO OUT 2R
+12V
-12V
CN7
CN8
CN15
CN16
CN17
CN18
2 4 AUDIO4
IC105~106 M5218AL
IC107~110 NJM4556S
D2-D5 RD5.1ESB2
μPC78M12H
μPC79M12H
CP1
CP2
Q1~8 DTC323TS
TO 7 3 REAR 3 CN5
NORMAL AUDIO CH1 OUT (H)
NORMAL AUDIO CH1 OUT (C)
TO 7 3 REAR 3 CN6
NORMAL AUDIO CH2 OUT (H)
NORMAL AUDIO CH2 OUT (C)
TO 7 3 REAR 3 CN7
HIFI AUDIO LCH OUT (H)
HIFI AUDIO LCH OUT (C)
TO 7 3 REAR 3 CN8
HIFI AUDIO RCH OUT (H)
HIFI AUDIO RCH OUT (C)
D1 1SS133
Q9 DTC124ES
Q10 DTA114ES
Q11 2SB1030RS
FROM 0 5 FUSE CN1 14, 10PIN
+15V
-15V
2 5 AUDIO5

— DC Voltage —

SYMBOL	No.	REC	PB
INTEGRATED CIRCUIT			
IC1	1	—	0.0
	2	—	0.0
	3	—	0.0
	4	—	-12.2
	5	—	0.0
	6	—	0.0
	7	—	0.0
	8	—	12.1
IC2	1	—	0.0
	2	—	0.0
	3	—	0.0
	4	—	-12.2
	5	—	0.0
	6	—	0.0
	7	—	0.0
	8	—	12.1
IC3	1	—	0.0
	2	—	0.0
	3	—	0.0
	4	—	-12.2
	5	—	0.0
	6	—	0.0
	7	—	0.0
	8	—	12.1
IC4	1	—	0.0
	2	—	0.0
	3	—	0.0
	4	—	-12.2
	5	—	0.0
	6	—	0.0
	7	—	0.0
	8	—	12.1
IC5	1	—	0.0
	2	—	0.0
	3	—	0.0
	4	—	-12.2
	5	—	0.0
	6	—	0.0
	7	—	0.0
	8	—	12.1
IC6	1	—	0.0
	2	—	0.0
	3	—	0.0
	4	—	-12.2
	5	—	0.0
	6	—	0.0
	7	—	0.0
	8	—	12.1
IC101	1	15.1	15.1
	2	0.0	0.0
	3	12.1	12.1
IC102	1	0.0	0.0
	2	-14.9	-14.9
	3	-12.2	-12.2
IC103	1	—	—
	2	—	—
	3	—	—
IC104	1	0.0	0.0
	2	-14.9	-14.9
	3	-12.1	-12.1
IC105	1	—	0.0
	2	—	0.0
	3	—	0.0
	4	—	-12.2
	5	—	0.0
	6	—	0.0
	7	—	0.0
	8	—	12.1
IC106	1	—	0.0
	2	—	0.0
	3	—	0.0
	4	—	-12.2
	5	—	0.0
	6	—	0.0
	7	—	0.0
	8	—	12.1

SYMBOL	No.	REC	PB
IC107	1	—	12.1
	2	—	0.0
	3	—	0.0
	4	—	0.0
	5	—	-12.1
	6	—	0.0
	7	—	0.0
	8	—	0.0
	9	—	12.1
IC108	1	—	12.1
	2	—	0.0
	3	—	0.0
	4	—	0.0
	5	—	-12.0
	6	—	0.0
	7	—	0.0
	8	—	0.0
	9	—	12.1
IC109	1	—	12.1
	2	—	0.0
	3	—	0.0
	4	—	0.0
	5	—	-12.1
	6	—	0.0
	7	—	0.0
	8	—	0.0
	9	—	12.1
IC110	1	—	12.1
	2	—	0.0
	3	—	0.0
	4	—	0.0
	5	—	-12.1
	6	—	0.0
	7	—	0.0
	8	—	0.0
	9	—	12.1
TRANSISTOR			
Q1	B	—	0.0
	C	—	0.0
	E	—	0.0
Q2	B	—	0.0
	C	—	0.0
	E	—	0.0
Q3	B	—	0.0
	C	—	0.0
	E	—	0.0
Q4	B	—	0.0
	C	—	0.0
	E	—	0.0
Q5	B	—	0.0
	C	—	0.0
	E	—	0.0
Q6	B	—	0.0
	C	—	0.0
	E	—	0.0
Q7	B	—	0.0
	C	—	0.0
	E	—	0.0
Q8	B	—	0.0
	C	—	0.0
	E	—	0.0
Q9	B	—	0.0
	C	—	12.0
	E	—	0.0
Q10	B	—	12.0
	C	—	0.0
	E	—	12.1
Q11	B	—	12.0
	C	—	0.0
	E	—	11.8

SYMBOL	No.	REC	PB
CONNECTOR			
CN1	1	—	0.0
	2	—	0.0
	3	—	0.0
CN2	1	—	0.0
	2	—	0.0
	3	—	0.0
CN3	1	—	0.0
	2	—	0.0
	3	—	0.0
CN4	1	—	0.0
	2	—	0.0
	3	—	0.0
CN5	1	—	0.0
	2	—	0.0
	3	—	0.0
	4	—	0.0
CN6	1	—	0.0
	2	—	0.0
	3	—	0.0
	4	—	
CN7	1	—	0.0
	2	—	0.0
	3	—	0.0
CN8	1	—	0.0
	2	—	0.0
	3	—	0.0
CN9	1	—	12.1
	2	—	0.0
	3	—	-12.2
CN10	1	—	15.2
	2	—	0.0
	3	—	-15.1
CN11	1	—	0.0
	2	—	0.0
	3	—	0.0
CN12	1	—	0.0
	2	—	0.0
	3	—	0.0
CN13	1	—	0.0
	2	—	0.0
	3	—	0.0
CN14	1	—	0.0
	2	—	0.0
	3	—	0.0
CN15	1	—	0.0
	2	—	0.0
	3	—	0.0
	4	—	0.0
CN16	1	—	0.0
	2	—	0.0
	3	—	0.0
	4	—	0.0
CN17	1	—	0.0
	2	—	0.0
	3	—	0.0
CN18	1	—	0.0
	2	—	0.0
	3	—	0.0
CN19	1	—	12.1
	2	—	0.0
	3	—	-12.2

4.49 XLR (AUDIO-4, -5) CIRCUIT BOARD

— AUDIO-4 —

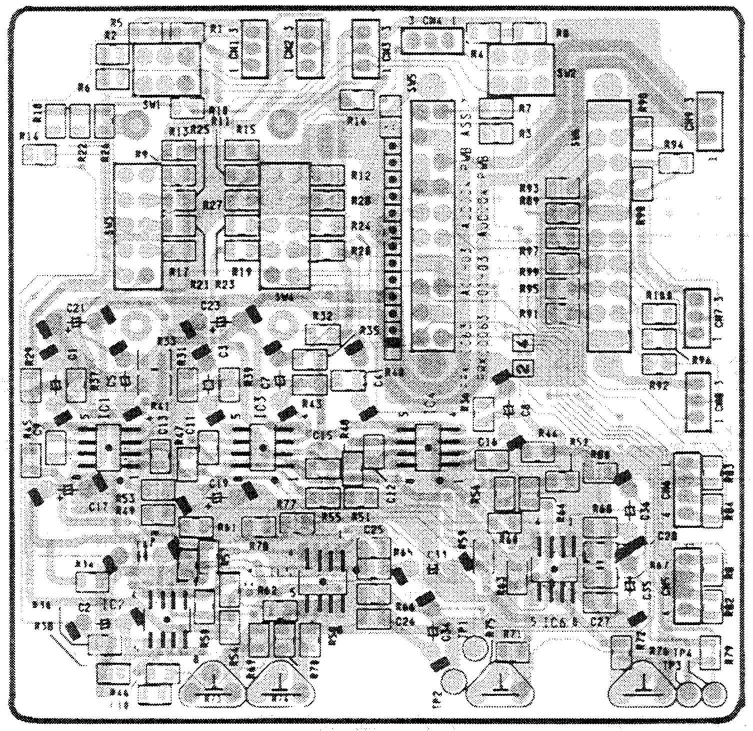

— AUDIO-5 —

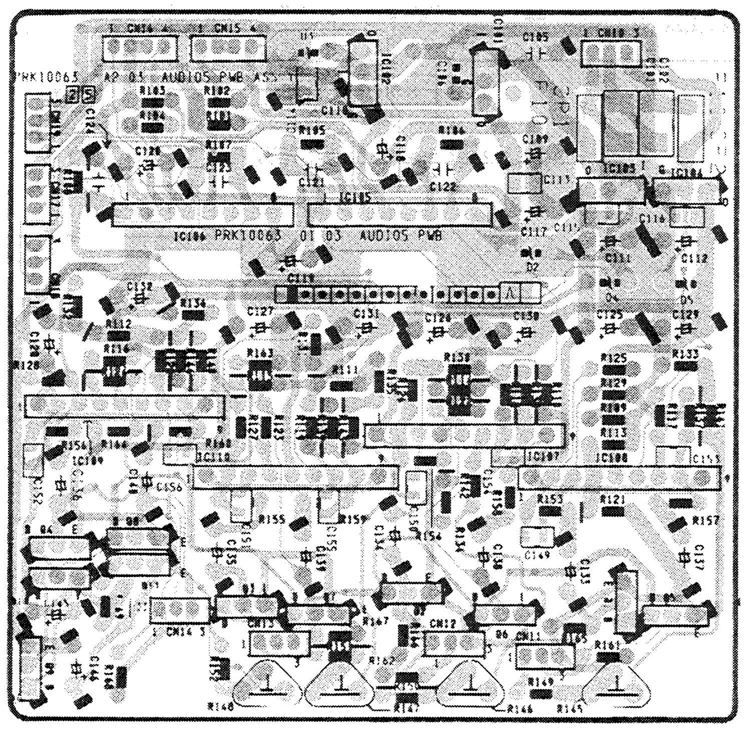

4.50 FRONT (AUDIO-6, JACK, VR) SCHEMATIC DIAGRAM

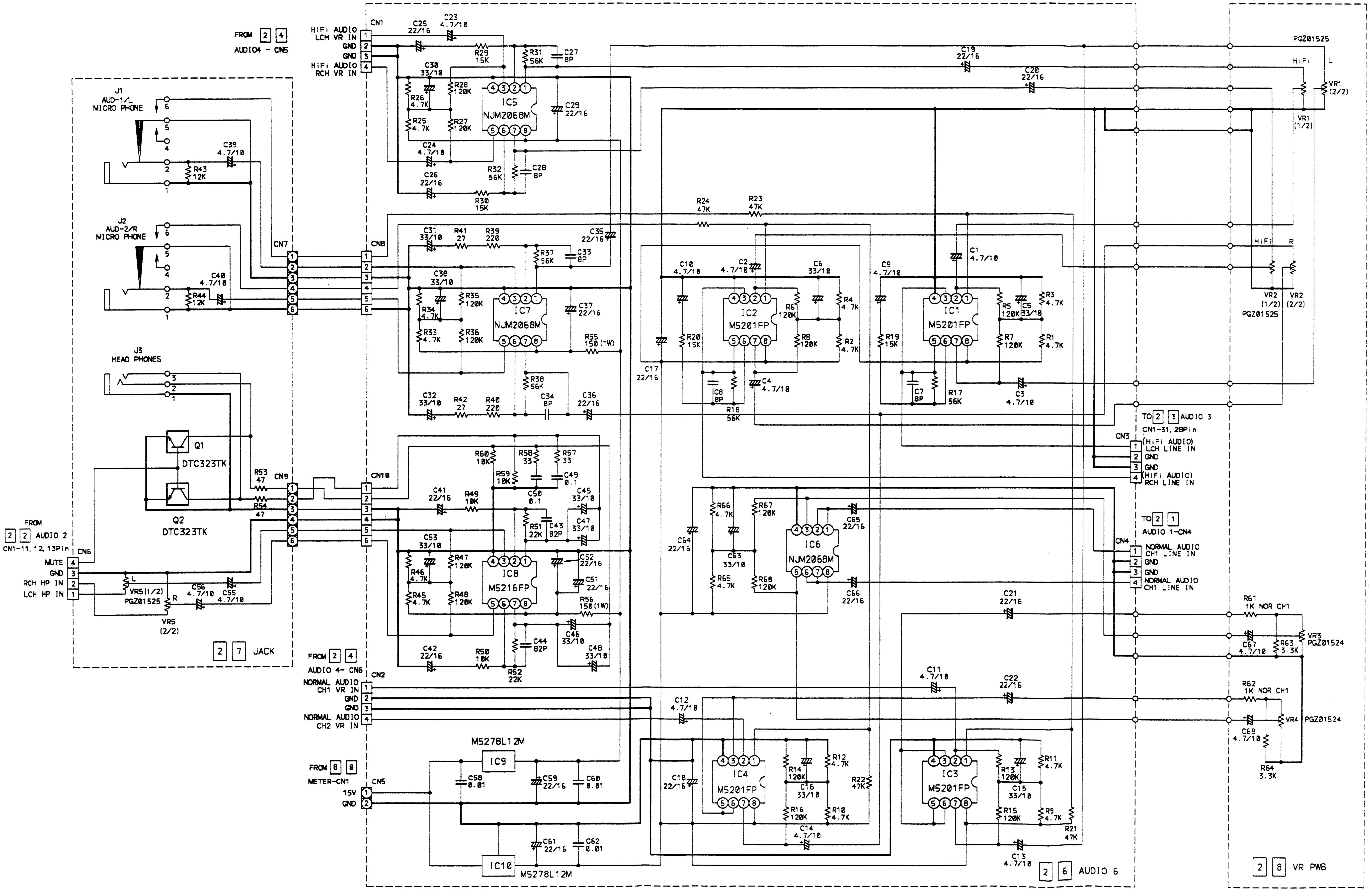
FROM 2 4 AUDIO4 - CN5
HiFi AUDIO LCH VR IN
GND
GND
HiFi AUDIO RCH VR IN
CN1
J1 AUD-1/L MICRO PHONE
J2 AUD-2/R MICRO PHONE
J3 HEAD PHONES
CN7
CN8
CN9
CN10
Q1 DTC323TK
Q2 DTC323TK
FROM 2 2 AUDIO 2 CN1-11, 12, 13Pin
CN6
MUTE
RCH HP IN
LCH HP IN
VR5(1/2) PGZ01525
VR5 (2/2)
2 7 JACK
IC5 NJM2068M
IC7 NJM2068M
IC8 M5216FP
IC6 NJM2068M
IC1 M5201FP
IC2 M5201FP
IC3 M5201FP
IC4 M5201FP
IC9 M5278L12M
IC10 M5278L12M
FROM 2 4 AUDIO 4- CN6
CN2
NORMAL AUDIO CH1 VR IN
NORMAL AUDIO CH2 VR IN
FROM 8 0 METER-CN1
CN5
15V
TO 2 3 AUDIO 3 CN1-31, 28Pin
CN3
(HiFi AUDIO) LCH LINE IN
(HiFi AUDIO) RCH LINE IN
TO 2 1 AUDIO 1-CN4
CN4
NORMAL AUDIO CH1 LINE IN
2 6 AUDIO 6
PGZ01525
HiFi L
VR1 (2/2)
VR1 (1/2)
HiFi R
VR2 (1/2)
VR2 (2/2)
R61 1K NOR CH1
R62 1K NOR CH1
VR3 PGZ01524
VR4 PGZ01524
R63 3.3K
R64 3.3K
C67 4.7/10
C68 4.7/10
2 8 VR PWB

4.51 FRONT (AUDIO-6, JACK, VR) & A/C HEAD CIRCUIT BOARD

— DC Voltage —

SYMBOL	No.	REC	PB
CONNECTOR			
CN1	1	—	0.0
	2	—	0.0
	3	—	0.0
	4	—	0.0
CN2	1	—	0.0
	2	—	0.0
	3	—	0.0
	4	—	0.0
CN3	1	—	5.9
	2	—	0.0
	3	—	0.0
	4	—	5.8
CN4	1	—	4.5
	2	—	0.0
	3	—	0.0
	4	—	4.4
CN5	1	—	15.0
	2	—	0.0
CN8	1	—	11.5
	2	—	5.4
	3	—	0.0
	4	—	11.5
	5	—	5.4
	6	—	0.0
CN11	1	—	0.2
	2	—	0.0
	3	—	0.1
	4	—	0.0
	5	—	0.0
CN12	1	—	0.1
	2	—	0.0
	3	—	0.0
	4	—	0.0
	5	—	0.0
CN13	1	—	5.8
	2	—	0.0
	3	—	0.0
	4	—	5.8
	5	—	0.0

— AUDIO-6 —

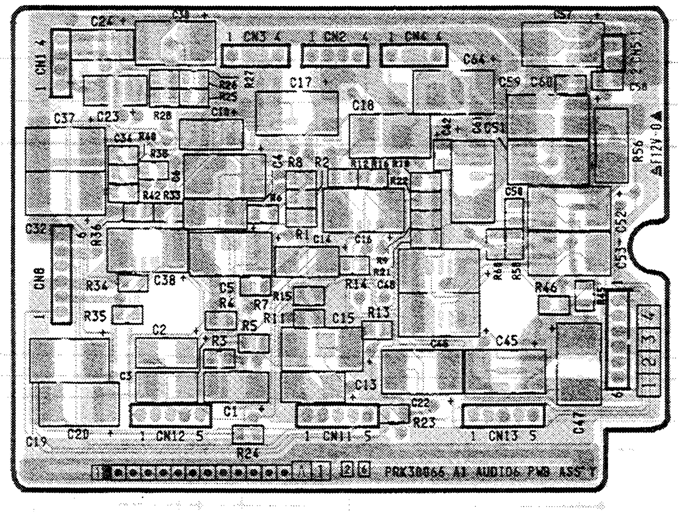
PRK30066 A1 AUDIO6 PWB ASS'Y
CN1
CN2
CN3
CN4
CN5
CN8
CN11
CN12
CN13

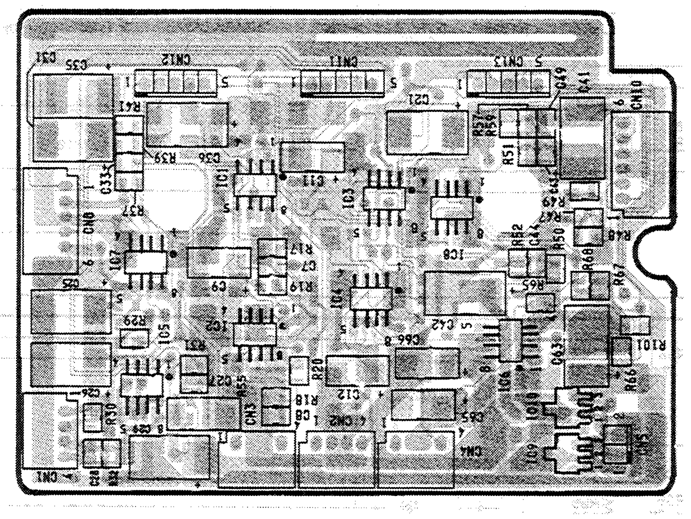

— VR —

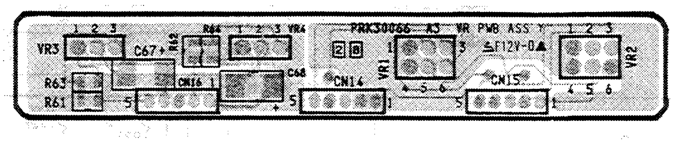
PRK30066 A3 VR PWB ASS'Y
VR1
VR2
VR3
VR4
CN14
CN15
CN16

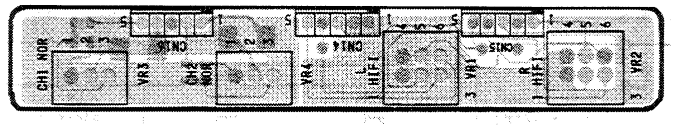

— JACK —

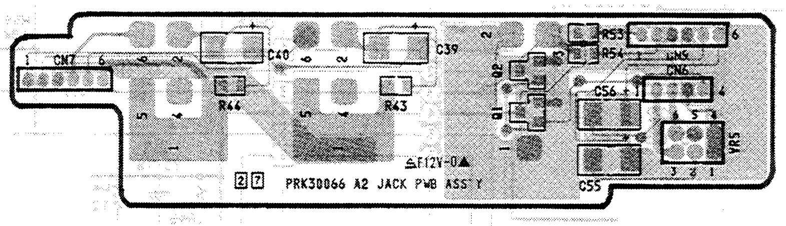
PRK30066 A2 JACK PWB ASS'Y
CN7
Q1
Q2
VR5

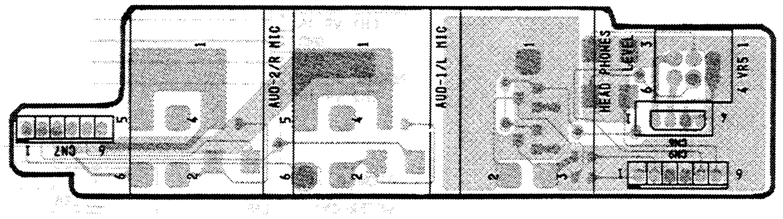
AUD-2/R MIC
AUD-1/L MIC
HEAD PHONES
LEVEL
VR5

— A/C HEAD —

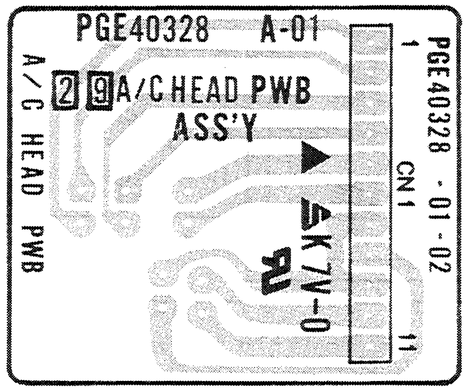
PGE40328 A-01
29 A/C HEAD PWB ASS'Y
A/C HEAD PWB
PGE40328 - 01 - 02
CN1
1
11
K7V-0

4.52 DRUM/CAPSTAN SERVO SCHEMATIC DIAGRAM

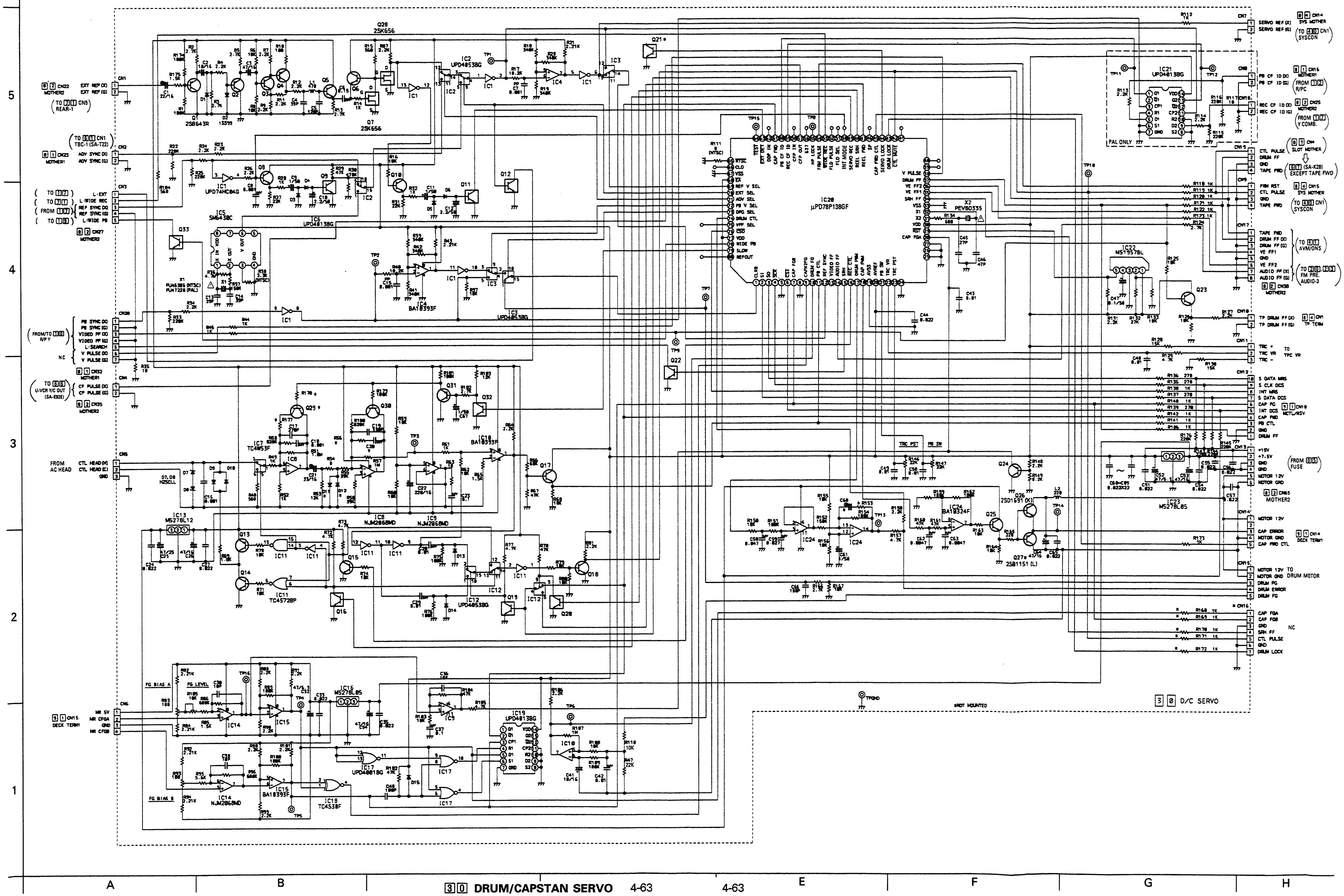

IC20
µPD78P138GF
IC1
UPD74HC04G
IC2
UPD4053BG
IC3
UPD4053BG
IC4
BA10393F
IC5
SM6438C
IC6
UPD4013BG
IC7
TC4W53F
IC8
NJM2068MD
IC9
NJM2068MD
IC10
BA10393F
IC11
TC4572BP
IC12
UPD4053BG
IC13
M5278L12
IC14
NJM2068MD
IC15
BA10393F
IC16
M5278L05
IC17
UPD4081BG
IC18
TC4S38F
IC19
UPD4013BG
IC21
UPD4013BG
IC22
M51957BL
IC23
M5278L05
IC24
BA10324F
Q1
2SB643R
D2
1SS99
Q7
2SK656
Q28
2SK656
Q26
2SD1691 (K)
Q27
2SB1151 (L)
X2
PEV80335
X1
PU4638G (NTSC)
PU4722B (PAL)
D7, D8
HZ5CLL
PAL ONLY
CN1
EXT REF (X)
EXT REF (G)
TO 7 1 CN5
REAR-1
8 2 CN22
MOTHER2
CN2
ADV SYNC (X)
ADV SYNC (G)
TO 8 1 CN1
TBC-1 (SA-T22)
8 1 CN23
MOTHER1
CN3
L-EXT
L:WIDE REC
REF SYNC (X)
REF SYNC (G)
L:WIDE PB
TO 1 7
TO 7 1
FROM 1 7
TO 1 8
8 2 CN27
MOTHER2
CN28
PB SYNC (X)
PB SYNC (G)
VIDEO FF (X)
VIDEO FF (G)
L:SEARCH
V PULSE (X)
V PULSE (G)
FROM/TO 1 0
R/P Y
NC
CN4
CF PULSE (X)
CF PULSE (G)
TO 6 6
U-VCR Y/C OUT
(SA-E92E)
8 1 CN32
MOTHER1
8 2 CN35
MOTHER2
CN5
FROM AC HEAD
CTL HEAD (X)
CTL HEAD (C)
GND
CN6
MR 5V
MR CFGA
GND
MR CFGB
9 1 CN15
DECK TERM1
FG BIAS A
FG LEVEL
FG BIAS B
CN7
SERVO REF (X)
SERVO REF (G)
8 4 CN14
SYS MOTHER
TO 4 0 CN1
SYSCON
CN8
PB CF ID (X)
PB CF ID (G)
8 1 CN16
MOTHER1
FROM 1 2
R/PC
CN18
REC CF ID (X)
REC CF ID (G)
8 2 CN25
MOTHER2
FROM 1 7
Y COMB.
CN19
CTL PULSE
DRUM FF
GND
TAPE FWD
8 1 CN4
SLOT MOTHER
6 7 (SA-K28)
EXCEPT TAPE FWD
CN9
FRM RST
CTL PULSE
GND
TAPE FWD
8 4 CN15
SYS MOTHER
TO 4 0 CN1
SYSCON
CN17
TAPE FWD
DRUM FF (X)
DRUM FF (G)
VE FF1
GND
VE FF2
AUDIO FF (X)
AUDIO FF (G)
TO 6 1
AVM/ONS
TO 2 0 2 3
FM PRE.
AUDIO-3
8 2 CN38
MOTHER2
CN10
TP DRUM FF (X)
TP DRUM FF (G)
8 4 CN1
TP TERM
CN11
TRC +
TRC VR
TRC −
TO TPC VR
CN12
S DATA MRS
S CLK DCS
INT MRS
S DATA DCS
CAP FG
INT DCS
CAP FWD
PB CTL
GND
DRUM FF
9 1 CN18
MCTL/RSV
CN13
+15V
+7.5V
GND
GND
MOTOR 12V
MOTOR GND
FROM 0 5
FUSE
8 2 CN63
MOTHER2
CN14
MOTOR 12V
CAP ERROR
MOTOR GND
GND
CAP FWD CTL
9 1 CN14
DECK TERM1
CN15
MOTOR 12V
MOTOR GND
DRUM PG
DRUM ERROR
DRUM FG
TO DRUM MOTOR
CN16
CAP FGA
CAP FGB
GND
SRH FF
CTL PULSE
GND
DRUM LOCK
NC
*NOT MOUNTED
3 0 D/C SERVO
TRC PST
PB SW
TP1
TP2
TP3
TP4
TP5
TP6
TP7
TP8
TP9
TP10
TP11
TP12
TP13
TP14
TP15
TP16
TPGND

— DC Voltage —

SYMBOL	No.	REC	PB
INTEGRATED CIRCUIT			
IC1	1	4.6	4.6
	2	0.4	0.4
	3	4.6	4.6
	4	0.4	0.4
	5	5.0	5.0
	6	0.1	0.1
	7	0.0	0.0
	8	0.4	0.4
	9	4.6	4.7
	10	0.1	0.1
	11	5.0	5.0
	12	5.1	5.1
	13	0.0	0.0
	14	5.1	5.1
IC2	1	4.9	4.9
	2	4.6	4.6
	3	0.0	4.6
	4	4.6	4.6
	5	4.6	4.6
	6	0.0	0.0
	7	0.0	0.0
	8	0.0	0.0
	9	0.0	5.0
	10	0.1	0.0
	11	0.0	5.1
	12	0.0	0.0
	13	4.6	4.6
	14	0.0	4.6
	15	4.6	4.6
	16	5.1	5.1
IC3	1	0.0	0.0
	2	0.0	0.0
	3	0.1	0.1
	4	0.0	0.0
	5	0.0	0.0
	6	0.0	0.0
	7	0.0	0.0
	8	0.0	0.0
	9	0.5	0.0
	10	4.5	4.5
	11	5.0	5.0
	12	0.4	0.4
	13	0.1	0.1
	14	0.1	0.1
	15	0.1	0.0
	16	5.1	5.1
IC4	1	5.0	5.0
	2	0.4	0.4
	3	3.3	3.3
	4	0.0	0.0
	5	3.3	3.3
	6	0.0	0.4
	7	5.0	5.0
	8	5.1	5.1
IC5	1	1.3	1.3
	2	1.4	1.4
	3	0.5	0.5
	4	0.0	0.0
	5	2.5	2.5
	6	4.9	4.9
	7	0.0	0.0
	8	5.1	5.1
IC7	1	6.1	6.1
	2	0.0	0.0
	3	0.0	0.0
	4	0.0	0.0
	5	12.1	0.0
	6	6.1	6.1
	7	6.2	6.1
	8	12.1	12.1
IC8	1	6.0	6.1
	2	6.1	6.1
	3	6.0	6.1
	4	0.0	0.0
	5	6.1	6.1
	6	0.0	6.1
	7	0.0	0.0
	8	12.1	0.0
IC9	1	3.0	3.0
	2	3.0	3.0
	3	2.5	2.6
	4	0.0	0.0
	5	6.0	6.1
	6	6.1	6.1
	7	0.0	6.1
	8	12.1	12.1
IC10	1	6.2	7.0
	2	6.1	6.1
	3	6.0	6.1
	4	0.0	0.0
	5	2.7	2.7
	6	0.0	2.7
	7	2.6	2.6
	8	12.1	12.1
IC11	1	0.2	11.7
	2	7.0	0.4
	3	12.1	0.0
	4	0.1	12.1
	5	5.0	0.0
	6	0.1	12.1
	7	6.8	12.1
	8	0.0	0.0
	9	0.0	6.9
	10	6.0	6.9
	11	6.0	6.9
	12	6.2	7.0
	13	5.2	12.1
	14	12.1	0.0
	15	12.1	12.1
	16	12.1	12.1
IC12	1	0.4	0.4
	2	0.4	0.4
	3	5.0	5.0
	4	5.0	5.0
	5	5.1	5.1
	6	0.0	0.0
	7	0.0	0.0
	8	0.0	0.0
	9	12.0	12.1
	10	0.1	0.0
	11	0.1	12.1
	12	0.1	12.1
	13	0.4	0.4
	14	7.0	0.4
	15	0.4	0.4
	16	12.1	12.1
IC13	1	12.1	12.1
	2	0.0	0.0
	3	15.0	15.0
IC14	1	2.6	2.6
	2	2.5	2.5
	3	2.5	2.5
	4	0.0	0.0
	5	2.5	2.5
	6	2.5	2.5
	7	2.7	2.7
	8	5.1	5.1
IC15	1	2.6	2.6
	2	2.6	2.6
	3	2.5	2.5
	4	0.0	0.0
	5	2.5	2.5
	6	2.7	2.7
	7	2.6	2.6
	8	5.1	5.1
IC16	1	5.1	5.1
	2	0.0	0.0
	3	7.6	7.6
IC17	1	0.0	0.0
	2	0.0	0.0
	3	5.1	5.1
	4	0.0	0.0
	5	2.6	2.6
	6	5.0	5.0
	7	0.0	0.0
	8	5.0	5.0
	9	2.6	2.6
	10	0.2	0.0
	11	2.6	2.6
	12	2.6	2.6
	13	2.6	2.6
	14	5.1	5.1
IC18	1	2.6	2.6
	2	2.6	2.6
	3	0.0	0.0
	4	2.6	2.6
	5	5.1	5.1
IC19	1	0.0	0.0
	2	5.0	5.0
	3	2.6	2.6
	4	0.1	0.0
	5	2.6	2.6
	6	0.0	0.0
	7	0.0	0.0
	8	0.0	0.0
	9	0.0	0.0
	10	0.0	0.0
	11	0.0	0.0
	12	0.0	0.0
	13	5.1	5.1
	14	5.1	5.1
IC20	1	0.1	0.0
	2	4.8	4.8
	3	4.9	4.9
	4	4.8	4.9
	5	0.0	0.0
	6	4.7	4.6
	7	2.6	2.6
	8	0.0	0.0
	9	2.6	2.6
	10	2.6	2.6
	11	2.2	2.5
	12	0.1	0.1
	13	2.5	2.5
	14	2.5	2.5
	15	0.0	0.0
	16	2.1	0.0
	17	1.8	1.8
	18	1.1	1.2
	19	0.0	0.0
	20	5.1	5.1
	21	3.3	3.4
	22	2.5	2.5
	23	2.4	2.5
	24	0.0	0.0
	25	0.0	0.0
	26	0.0	0.0
	27	0.0	0.0
	28	2.6	2.6
	29	5.1	5.1
	30	5.1	5.1
	31	2.7	2.7
	32	2.4	2.4
	33	0.0	0.0
	34	2.5	0.0
	35	2.5	0.0
	36	2.4	0.3
	37	0.0	2.5
	38	0.0	0.0
	39	0.0	0.0
	40	0.0	0.0
	41	0.0	0.1
	42	0.0	5.1
	43	2.9	5.1
	44	5.1	5.1
	45	5.0	5.1
	46	5.1	5.1
	47	5.1	5.1
	48	0.0	0.0
	49	5.0	0.0
	50	0.0	0.0
	51	0.0	0.0
	52	5.0	5.1
	53	5.0	5.1
	54	5.0	5.0
	55	0.0	5.1
	56	5.1	5.1
	57	0.0	0.0
	58	5.0	5.1
	59	5.0	5.1
	60	5.0	5.1
	61	5.0	5.0
	62	5.0	5.0
	63	5.0	5.1
	64	5.0	5.1
	65	0.0	0.0
	66	0.0	0.0
	67	0.0	0.0
	68	5.1	5.1
	69	5.0	5.0
	70	0.0	5.0
	71	0.0	5.1
	72	0.5	0.4
	73	4.5	4.5
	74	3.0	2.9
	75	0.0	0.0
	76	4.3	4.8
	77	5.1	5.1
	78	0.0	0.0
	79	0.0	0.0
	80	0.0	0.0
IC22	1	5.1	5.1
	2	2.0	2.0
	3	0.0	0.0
	4	1.3	1.3
	5	5.1	5.1
IC23	1	5.1	5.1
	2	0.0	0.0
	3	7.6	7.6
IC24	1	1.9	1.8
	2	1.8	1.8
	3	1.8	1.8
	4	15.1	15.1
	5	1.1	1.2
	6	1.1	1.2
	7	3.1	3.2
	8	0.0	0.0
	9	0.0	0.0
	10	0.0	0.0
	11	0.0	0.0
	12	2.5	2.5
	13	2.5	2.5
	14	3.0	3.0
TRANSISTOR			
Q1	B	6.5	6.5
	C	0.0	0.0
	E	7.2	7.2
Q2	B	0.1	0.1
	C	0.0	0.0
	E	0.7	0.7
Q3	B	4.4	4.4
	C	11.3	11.3
	E	3.8	3.8
Q4	B	11.3	11.4
	C	6.8	6.8
	E	12.0	12.0
Q5	B	6.8	6.8
	C	0.0	12.1
	E	6.1	6.2
Q6	B	3.3	3.3
	C	5.1	5.1
	E	2.8	2.8
Q7	D	3.3	3.3
	G	2.8	2.8
	S	0.0	0.0
Q8	B	0.4	0.4
	C	5.1	5.1
	E	0.7	0.7
Q9	B	1.5	1.5
	C	0.1	0.0
	E	0.0	0.0
Q10	B	5.0	5.1
	C	5.1	5.1
	E	4.5	4.5
Q11	B	0.0	0.0
	C	5.0	5.1
	E	0.0	0.0
Q12	B	0.0	5.0
	C	0.0	0.0
	E	0.0	0.0
Q13	B	11.7	12.1
	C	7.0	5.8
	E	12.1	12.1
Q14	B	0.3	0.0
	C	7.0	5.8
	E	0.0	0.0
Q15	B	0.3	0.0
	C	0.3	12.1
	E	0.0	0.0
Q16	B	5.0	0.0
	C	0.1	12.1
	E	0.0	0.0
Q17	B	2.5	2.8
	C	5.1	5.1
	E	5.1	2.5
Q18	B	0.3	0.7
	C	2.9	0.1
	E	0.0	0.0
Q19	B	5.0	5.0
	C	0.1	0.0
	E	0.0	0.0
Q20	B	0.0	0.0
	C	12.0	12.1
	E	0.0	0.0
Q22	B	0.0	0.0
	C	5.2	5.3
	E	0.0	0.0
Q23	B	2.5	2.5
	C	5.1	5.1
	E	5.1	5.1
Q24	B	4.0	4.0
	C	0.0	0.0
	E	2.6	2.6
Q25	B	3.1	3.2
	C	15.1	15.1
	E	2.5	2.6
Q26	B	2.5	2.6
	C	12.2	12.1
	E	1.9	2.0
Q27	B	2.5	2.6
	C	0.0	0.0
	E	1.9	2.0
Q28	D	0.0	0.0
	G	3.3	3.3
	S	0.0	0.0
Q29	B	7.0	7.0
	C	6.4	6.5
	E	6.4	6.5
Q30	B	6.6	6.6
	C	6.0	6.0
	E	6.0	6.1
Q31	B	12.1	12.1
	C	0.0	0.0
	E	8.5	8.6
Q32	B	0.0	0.0
	C	12.1	12.1
	E	0.0	0.0
Q33	B	0.0	0.0
	C	9.6	9.6
	E	0.0	0.0
CONNECTOR			
CN1	1	0.0	0.0
	2	0.0	0.0
CN2	1	4.6	4.6
	2	0.0	0.0
CN3	1	0.2	0.0
	2	5.0	5.1
	3	4.6	4.6
	4	0.0	0.0
	5	9.6	9.6
CN5	1	6.2	6.1
	2	6.1	6.1
	3	0.0	0.0
CN6	1	5.1	5.1
	2	2.5	2.5
	3	0.0	0.0
	4	2.5	2.5
CN7	1	0.5	0.5
	2	0.0	0.0
CN9	1	5.0	5.0
	2	3.1	5.6
	3	0.0	0.0
	4	4.9	4.9
CN10	1	0.0	2.2
	2	0.0	0.0
CN11	1	4.4	4.5
	2	2.5	2.5
	3	0.6	0.6
CN12	1	2.5	0.0
	2	0.0	0.0
	3	0.0	0.0
	4	5.0	5.0
	5	4.6	4.7
	6	2.6	2.6
	7	4.8	4.7
	8	4.8	4.8
	9	4.8	4.8
	10	4.9	4.9
CN13	1	15.1	15.1
	2	7.6	7.6
	3	0.0	0.0
	4	0.0	0.0
	5	12.3	12.3
	6	0.0	0.0
CN14	1	12.3	12.3
	2	0.0	0.0
	3	1.9	2.0
	4	0.0	0.0
	5	50	5.0
CN15	1	12.3	12.3
	2	0.0	0.0
	3	0.0	0.0
	4	2.9	2.9
	5	3.9	3.9
CN17	1	4.9	4.9
	2	4.9	4.9
	3	0.0	0.0
	4	0.4	0.4
	5	0.0	0.0
	6	0.4	0.4
	7	0.0	2.6
	8	0.0	0.0
CN19	1	3.1	0.6
	2	3.1	0.0
	3	0.0	0.0
	4	4.9	4.9
CN20	1	4.6	4.7
	2	0.0	0.0
	3	0.0	0.0
	4	0.0	0.0
	5	5.2	5.3
	6	0.0	0.0
	7	0.0	0.0

4.53 DRUM/CAPSTAN SERVO CIRCUIT BOARD

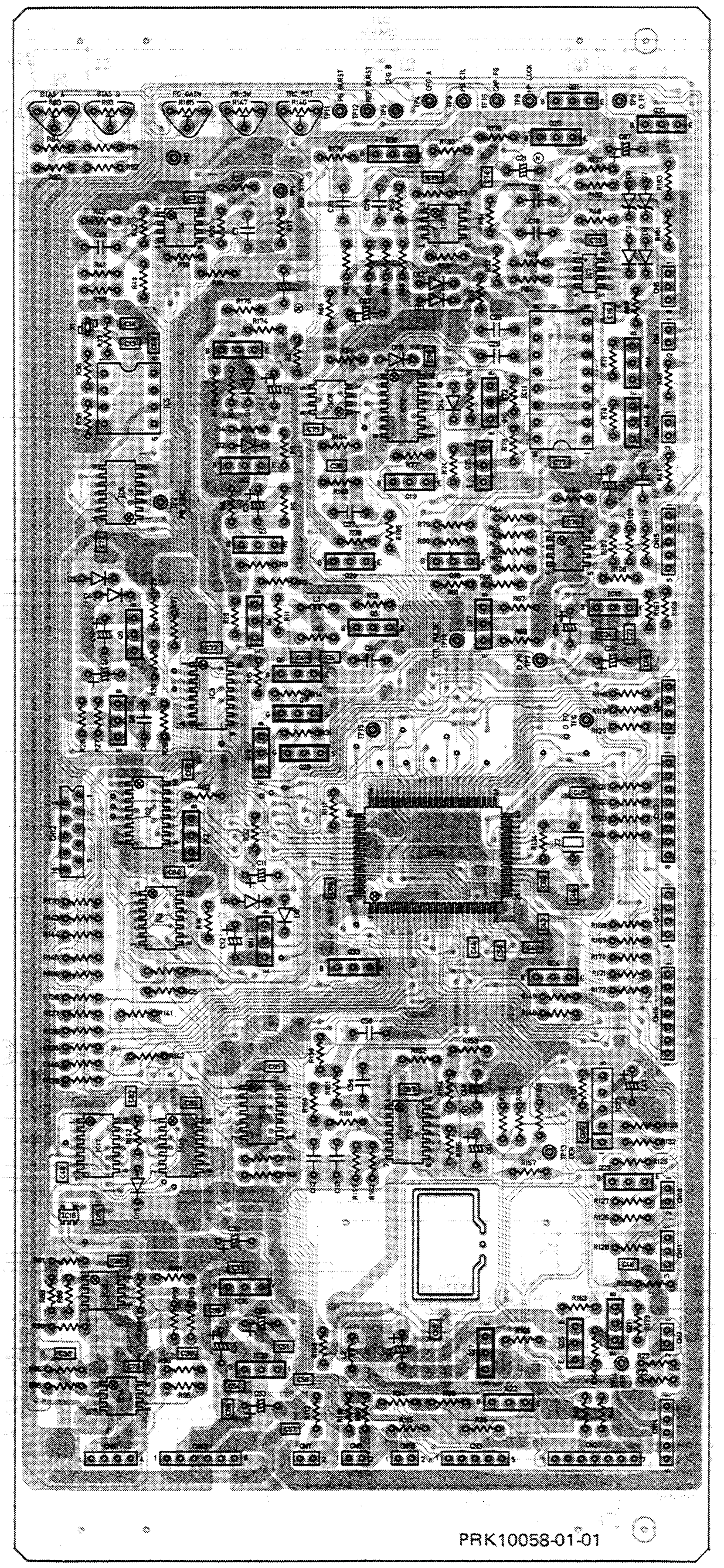

— MAIN WAVEFORMS OF D/C SERVO CIRCUIT —

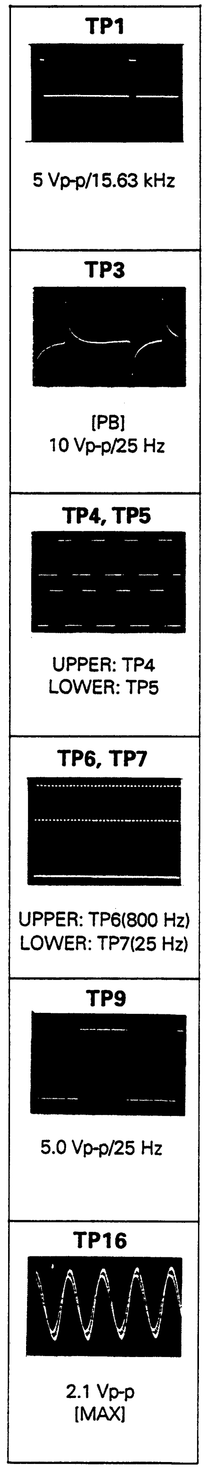

TP1: 5 Vp-p/15.63 kHz

TP3: [PB] 10 Vp-p/25 Hz

TP4, TP5: UPPER: TP4 LOWER: TP5

TP6, TP7: UPPER: TP6(800 Hz) LOWER: TP7(25 Hz)

TP9: 5.0 Vp-p/25 Hz

TP16: 2.1 Vp-p [MAX]

4.54 MECHACONTROL/REEL SERVO CIRCUIT BOARD

— Rear —

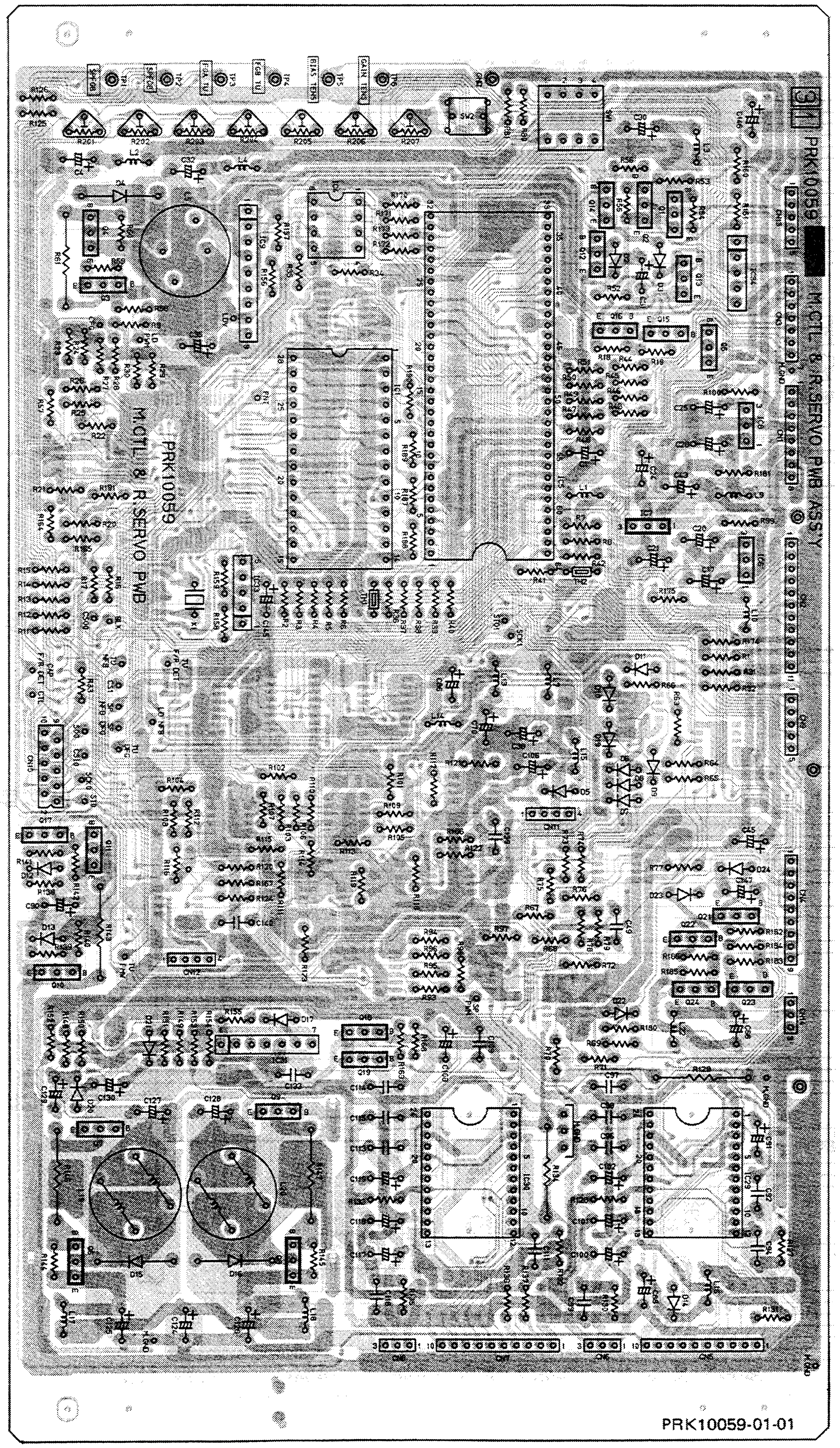
PRK10059 M.CTL & R.SERVO PWB ASSY
M.CTL & R.SERVO PWB
PRK10059
PRK10059-01-01

— Front —

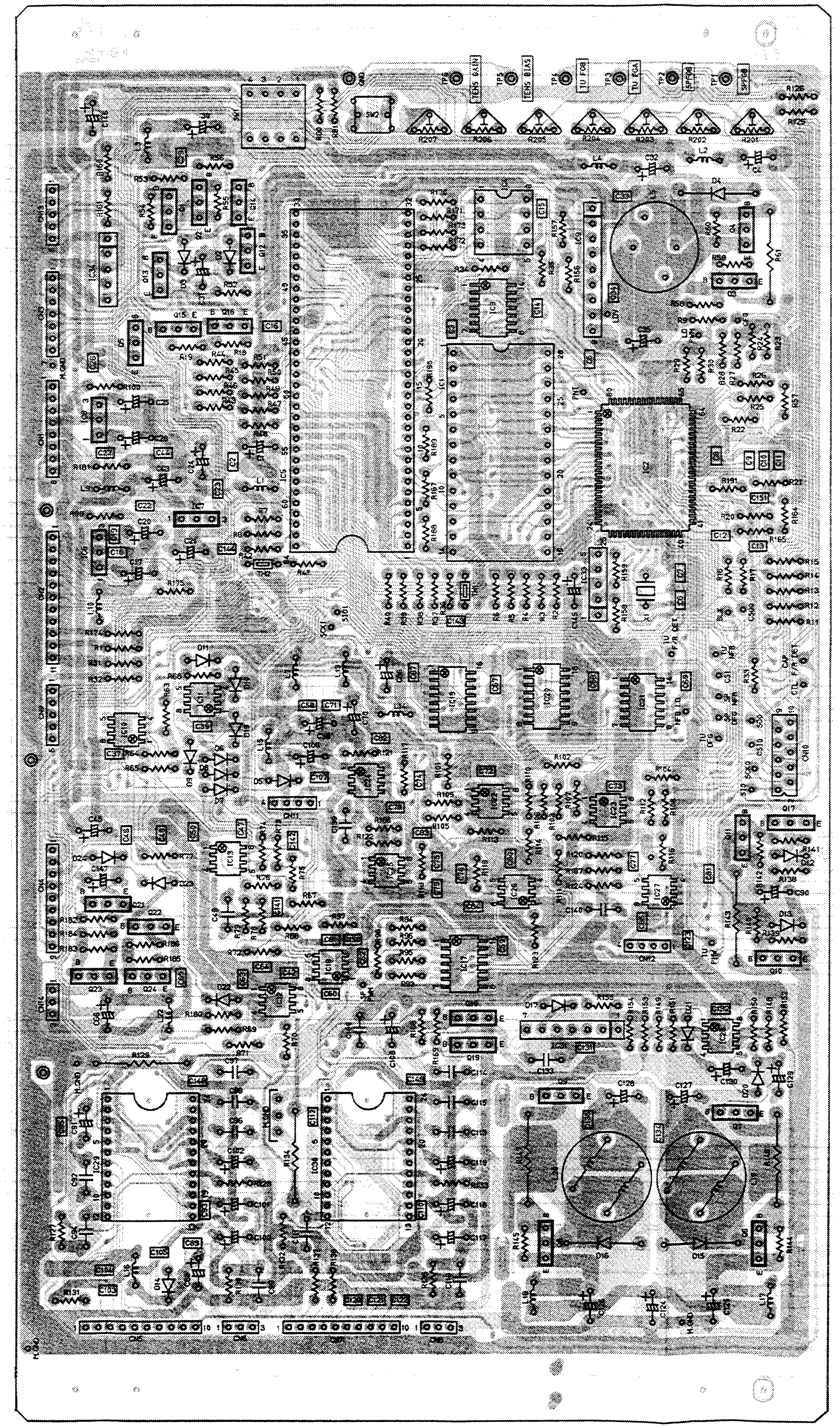

— MAIN WAVEFORMS OF M-CTL/REEL SERVO CIRCUIT —

TP1, TP2

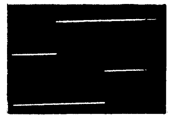

UPPER: TP1
LOWER: TP2

TP3, TP4

UPPER: TP3
LOWER TP4

— DC Voltage (1/2) —

SYMBOL	No.	REC	PB
INTEGRATED CIRCUIT			
IC1	1	4.9	4.9
	2	2.5	2.5
	3	2.1	2.2
	4	3.0	2.8
	5	2.9	2.9
	6	3.1	3.0
	7	2.5	2.5
	8	2.4	2.4
	9	2.5	2.6
	10	2.4	2.4
	11	2.4	2.4
	12	2.6	2.6
	13	2.1	2.1
	14	0.0	0.0
	15	2.0	2.0
	16	2.1	2.0
	17	1.9	1.9
	18	2.1	2.1
	19	1.8	1.8
	20	1.7	1.7
	21	2.5	2.3
	22	0.0	0.0
	23	2.0	2.0
	24	1.3	1.4
	25	2.7	2.7
	26	0.8	0.8
	27	0.5	0.5
	28	4.9	4.9
IC2	1	1.3	1.4
	2	2.7	2.7
	3	2.1	2.2
	4	2.9	2.8
	5	2.9	2.9
	6	3.1	3.0
	7	2.5	2.5
	8	2.4	2.4
	9	2.4	2.6
	10	2.4	2.4
	11	0.1	1.8
	12	0.1	2.1
	13	0.1	1.9
	14	0.1	2.0
	15	0.1	2.0
	16	0.1	2.1
	17	0.1	2.6
	18	1.2	2.4
	19	4.9	4.9
	20	4.9	4.9
	21	4.9	4.9
	22	4.3	3.8
	23	3.2	3.2
	24	3.7	4.5
	25	4.2	4.7
	26	3.2	2.5
	27	4.9	4.7
	28	3.9	3.9
	29	0.0	0.0
	30	0.0	0.0
	31	4.9	4.9
	32	4.8	4.8
	33	0.0	0.0
	34	2.4	2.4
	35	2.3	2.3
	36	4.8	4.8
	37	4.9	4.9
	38	4.7	4.7
	39	4.8	4.8
	40	3.9	3.9
	41	1.3	0.1
	42	1.3	0.1
	43	4.9	4.9
	44	2.5	2.5
	45	2.5	2.5
	46	0.3	0.3
	47	5.0	5.0
	48	1.9	1.8
	49	1.9	1.9
	50	0.4	0.9
	51	2.7	1.2
	52	0.0	0.0
	53	5.0	5.0
	54	5.0	5.0
	55	1.2	0.0
	56	1.2	1.2
	57	4.9	4.9
	58	4.9	4.9
	59	2.2	2.5
IC2	60	2.5	2.5
	61	4.9	4.9
	62	2.6	2.6
	63	0.0	0.0
	64	0.0	0.0
	65	0.0	0.0
	66	4.7	4.7
	67	0.3	0.5
	68	1.2	0.6
	69	4.9	4.9
	70	4.9	4.9
	71	4.9	4.9
	72	4.9	4.9
	73	0.0	0.0
	74	0.0	0.0
	75	3.2	3.2
	76	0.5	0.5
	77	0.8	0.8
	78	2.5	2.5
	79	2.0	2.0
	80	2.5	2.3
IC3	1	3.2	3.1
	2	3.2	3.1
	3	0.0	1.7
	4	1.7	1.7
	5	2.5	2.3
	6	4.9	4.9
	7	0.0	0.0
	8	4.9	4.9
	9	1.3	1.4
	10	1.7	1.7
	11	0.0	0.0
	12	4.8	4.8
	13	4.8	4.8
	14	4.9	4.9
IC4	1	0.0	0.0
	2	4.9	4.9
	3	0.0	0.0
	4	4.8	4.8
	5	0.0	0.0
	6	0.0	0.0
	7	4.9	4.9
	8	4.9	4.9
IC5	1	4.8	4.8
	2	0.1	0.1
	3	4.8	4.8
	4	0.0	0.0
	5	0.5	0.5
	6	4.9	4.9
	7	2.5	2.5
	8	2.4	2.4
	9	4.8	4.8
	10	4.8	4.8
	11	4.9	4.9
	12	4.8	4.8
	13	0.0	0.0
	14	4.9	4.9
	15	0.0	0.0
	16	0.0	0.0
	17	0.0	0.0
	18	0.0	0.0
	19	0.0	0.0
	20	0.0	0.0
	21	0.0	0.0
	22	4.9	4.9
	23	0.0	0.0
	24	0.0	0.0
	25	4.9	4.9
	26	0.0	0.0
	27	4.8	4.8
	28	4.8	4.8
	29	4.8	4.8
	30	4.8	4.8
	31	4.8	4.8
	32	4.8	2.4
	33	4.8	0.0
	34	4.8	0.0
	35	0.0	0.0
	36	4.9	4.9
	37	0.0	0.0
	38	4.9	4.9
	39	0.0	0.0
	40	4.9	4.9
	41	0.0	0.0
	42	4.9	4.9
	43	4.9	4.9
	44	4.8	4.8
IC5	45	0.0	0.0
	46	0.0	0.0
	47	5.0	5.0
	48	4.8	4.8
	49	4.8	4.8
	50	0.0	0.0
	51	3.6	3.6
	52	1.8	1.8
	53	2.1	2.1
	54	1.9	1.9
	55	2.1	2.0
	56	1.9	2.0
	57	2.1	2.1
	58	2.6	2.6
	59	2.4	2.4
	60	0.0	0.0
	61	4.7	4.7
	62	0.0	0.0
	63	4.8	4.8
	64	4.8	4.9
IC6	1	0.0	0.0
	2	-14.0	-14.0
	3	-12.0	-12.0
IC7	1	7.6	7.6
	2	0.0	0.0
	3	5.0	5.0
IC8	1	12.2	12.2
	2	0.0	0.0
	3	14.2	14.2
IC9	1	0.0	0.0
	2	0.0	0.0
	3	0.0	0.0
	4	0.0	0.0
	5	0.0	0.0
	6	0.0	0.0
	7	0.0	0.0
	8	17.7	17.8
	9	17.7	17.8
IC10	1	6.4	6.4
	2	3.2	3.3
	3	3.2	3.3
	4	0.0	0.0
	5	0.5	0.5
	6	0.5	0.5
	7	10.9	10.9
	8	12.1	12.1
IC11	1	4.5	0.1
	2	4.5	0.1
	3	4.5	4.5
	4	0.0	0.0
	5	0.6	0.6
	6	0.6	0.6
	7	0.0	0.6
	8	12.1	12.1
IC12	1	0.4	1.0
	2	0.1	0.1
	3	0.1	0.1
	4	0.0	0.0
	5	0.3	0.2
	6	0.3	0.2
	7	3.0	1.8
	8	12.1	12.1
IC13	1	0.2	0.2
	2	1.7	1.7
	3	1.7	1.7
	4	-11.9	-11.9
	5	0.2	0.2
	6	0.2	0.2
	7	1.9	1.9
	8	12.1	12.1
IC17	1	0.3	0.2
	2	0.3	0.2
	3	0.1	0.1
	4	0.1	0.1
	5	4.9	4.9
	6	0.0	0.0
	7	0.0	0.0
	8	0.1	0.0
	9	0.1	0.0
	10	0.1	0.0
	11	0.1	0.0
IC17	12	0.0	0.0
	13	4.9	4.9
	14	5.0	5.0
IC18	1	0.3	0.2
	2	0.3	0.2
	3	0.3	0.2
	4	-11.9	0.2
	5	0.1	0.1
	6	0.1	0.1
	7	0.1	0.1
	8	5.0	5.0
IC19	1	0.0	0.1
	2	0.0	0.0
	3	0.0	1.1
	4	0.0	0.0
	5	0.0	0.0
	6	0.0	0.0
	7	0.0	0.0
	8	0.0	0.0
	9	0.2	0.0
	10	0.0	0.0
	11	0.0	4.9
	12	0.0	1.1
	13	—	—
	14	—	—
	15	0.0	0.0
	16	4.8	4.8
IC20	1	0.0	0.0
	2	0.0	0.0
	3	1.1	1.5
	4	0.0	0.0
	5	0.0	0.0
	6	0.0	0.0
	7	0.0	0.0
	8	0.0	0.0
	9	0.0	0.0
	10	0.0	0.0
	11	4.9	4.9
	12	—	—
	13	—	—
	14	—	—
	15	0.0	0.0
	16	4.8	4.8
IC21	1	4.8	4.8
	2	0.0	0.0
	3	0.0	0.0
	4	0.0	0.0
	5	0.0	0.0
	6	0.0	0.0
	7	0.0	0.0
	8	0.0	0.0
	9	0.0	0.0
	10	0.0	0.0
	11	0.0	0.0
	12	0.0	0.0
	13	4.8	4.8
	14	4.8	4.8
IC22	1	0.0	0.3
	2	2.5	2.3
	3	0.0	2.5
	4	0.0	0.0
	5	2.5	2.5
	6	2.5	2.5
	7	0.0	2.5
	8	4.9	4.9
IC23	1	0.0	2.3
	2	2.5	2.4
	3	2.5	2.5
	4	0.0	0.0
	5	2.5	2.5
	6	2.5	2.5
	7	0.2	2.4
	8	4.9	4.9
IC24	1	2.5	2.5
	2	0.0	2.5
	3	2.5	2.5
	4	0.0	0.0
	5	2.5	2.5
	6	2.5	2.5
	7	2.4	2.4
	8	4.9	4.9

— DC Voltage (2/2) —

SYMBOL	No.	REC	PB
IC25	1	2.5	2.5
	2	0.0	2.5
	3	0.0	2.5
	4	0.0	0.0
	5	2.5	2.5
	6	0.2	2.5
	7	0.2	2.5
	8	4.9	4.9
IC26	1	0.2	2.5
	2	0.3	2.5
	3	2.5	2.5
	4	0.0	0.0
	5	2.5	2.5
	6	2.5	2.5
	7	2.4	2.5
	8	4.9	4.9
IC27	1	2.5	2.5
	2	2.5	2.5
	3	2.5	2.5
	4	0.0	0.0
	5	2.5	2.5
	6	2.5	2.5
	7	2.5	2.5
	8	4.9	4.9
IC28	1	0.4	0.3
	2	2.4	2.4
	3	2.0	1.8
	4	0.0	0.0
	5	1.6	1.6
	6	2.4	2.4
	7	0.3	0.3
	8	4.8	4.8
IC29	1	1.0	1.2
	2	0.1	0.1
	3	1.0	1.2
	4	0.5	0.7
	5	2.2	2.2
	6	2.2	2.2
	7	2.2	2.2
	8	2.2	2.2
	9	2.2	2.2
	10	2.2	2.2
	11	2.2	2.2
	12	1.7	1.7
	13	4.8	4.8
	14	2.8	2.8
	15	0.0	0.0
	16	0.1	0.1
	17	0.8	0.8
	18	1.2	1.3
	19	0.0	0.0
	20	0.0	0.0
	21	0.6	0.6
	22	0.1	0.1
	23	1.0	1.2
	24	4.2	3.7
IC30	1	3.8	0.2
	2	0.3	0.3
	3	4.2	0.3
	4	2.0	1.8
	5	2.2	2.2
	6	2.2	2.2
	7	2.2	2.2
	8	2.3	2.2
	9	2.2	2.2
	10	2.2	2.2
	11	4.6	2.2
	12	1.7	1.8
	13	4.8	4.8
	14	2.9	2.8
	15	4.9	4.9
	16	0.3	0.3
	17	0.8	0.8
	18	1.3	1.3
	19	0.0	0.0
	20	0.0	0.0
	21	0.7	0.7
	22	0.3	0.3
	23	4.3	0.3
	24	6.0	5.0
IC31	1	2.4	2.4
	2	-0.1	-0.1
	3	4.8	4.8
	4	0.0	0.0
	5	2.4	2.4
	6	4.0	4.0
	7	4.8	4.8
IC33	1	4.9	4.9
	2	1.4	1.4
	3	0.0	0.0
	4	1.3	1.3
	5	4.8	4.8
IC34	1	17.7	17.8
	2	1.6	1.6
	3	0.0	0.0
	4	1.3	1.3
	5	4.8	4.8
TRANSISTOR			
Q1	B	17.7	17.8
	C	1.5	1.6
	E	17.7	17.8
Q2	B	17.0	17.0
	C	17.6	17.7
	E	17.7	17.8
Q3	B	0.7	0.7
	C	0.1	0.0
	E	0.0	0.0
Q4	B	17.0	17.0
	C	17.7	17.8
	E	17.7	17.8
Q5	B	7.6	7.6
	C	0.0	0.0
	E	0.0	0.0
Q6	B	17.6	17.6
	C	4.4	3.7
	E	17.7	17.7
Q7	B	0.3	0.3
	C	16.7	16.3
	E	0.0	0.0
Q8	B	17.4	17.5
	C	6.4	5.8
	E	17.7	17.7
Q9	B	0.4	0.4
	C	12.8	13.7
	E	0.0	0.0
Q10	B	0.0	0.0
	C	9.1	9.1
	E	0.0	0.0
Q11	B	0.7	0.7
	C	0.1	0.1
	E	0.0	0.0
Q12	B	0.0	0.0
	C	4.8	4.8
	E	4.9	4.9
Q13	B	0.0	0.0
	C	17.7	17.7
	E	0.0	0.0
Q14	B	4.8	4.8
	C	0.1	0.1
	E	0.0	0.0
Q15	B	0.0	0.0
	C	17.7	17.7
	E	0.0	0.0
Q16	B	17.7	17.7
	C	0.0	0.0
	E	17.7	17.7
Q17	B	0.0	0.0
	C	4.7	4.7
	E	4.8	4.8
Q18	B	4.5	3.7
	C	0.8	1.1
	E	4.8	4.8
Q19	B	6.3	5.8
	C	1.9	1.8
	E	4.8	4.8
Q21	B	0.0	0.0
	C	17.7	17.7
	E	0.0	0.0
Q22	B	0.0	0.0
	C	17.7	17.7
	E	0.0	0.0
Q23	B	17.7	17.7
	C	0.0	0.0
	E	17.7	17.7
Q24	B	17.7	17.7
	C	0.0	0.0
	E	17.7	17.7
CONNECTOR			
CN1	1	17.7	17.8
	2	0.0	0.0
	3	15.1	15.0
	4	0.0	0.0
	5	7.6	7.6
	6	0.0	0.0
	7	-14.5	-14.6
	8	0.0	0.0
CN2	1	0.3	0.3
	2	0.5	0.5
	3	0.0	0.0
	4	4.8	4.8
	5	0.1	0.1
	6	4.9	4.9
	7	4.9	4.9
	8	4.8	4.8
	9	0.0	0.0
	10	1.1	1.1
	11	0.0	0.0
CN3	1	0.0	0.0
	2	0.0	0.0
	3	0.0	0.0
	4	0.0	0.0
	5	4.8	4.8
	6	0.0	0.0
	7	0.0	0.0
CN4	1	12.1	12.1
	2	0.0	0.0
	3	-11.9	-11.9
	4	3.1	3.1
	5	0.0	0.0
	6	2.5	2.5
	7	11.4	11.4
	8	4.9	4.9
	9	10.8	10.8
CN5	1	2.8	2.8
	2	1.6	1.6
	3	2.2	2.2
	4	2.2	2.2
	5	2.2	2.2
	6	2.2	2.2
	7	2.2	2.2
	8	2.2	2.2
	9	17.7	17.7
	10	9.1	9.1
CN6	1	1.0	1.1
	2	1.0	1.0
	3	1.0	1.0
CN7	1	4.8	4.8
	2	3.6	3.6
	3	2.9	2.9
	4	1.6	1.6
	5	2.2	2.2
	6	2.2	2.2
	7	2.2	2.2
	8	2.2	2.2
	9	2.2	2.2
	10	2.2	2.2
CN8	1	5.2	4.4
	2	5.2	4.2
	3	5.0	4.4
CN9	1	1.3	0.5
	2	4.9	4.9
	3	0.0	0.0
	4	3.9	3.9
	5	5.0	5.0
CN10	1	4.9	4.9
	2	4.8	4.9
	3	4.8	4.8
	4	4.8	4.7
	5	2.6	2.6
	6	4.6	4.7
	7	5.0	5.0
	8	2.2	2.4
	9	0.0	0.0
	10	2.5	0.0
CN11	1	5.0	5.0
	2	2.5	2.5
	3	0.0	0.0
	4	2.5	2.5
CN12	1	5.0	5.0
	2	2.5	2.5
	3	0.0	0.0
	4	2.5	2.5
CN13	1	0.0	0.0
	2	0.0	0.0
	3	1.5	1.6
	4	17.6	17.7
	5	0.0	0.0
CN14	1	0.0	0.0
	2	0.0	0.0
	3	0.0	0.0

4.55 MECHACONTROL/REEL SERVO SCHEMATIC DIAGRAM

— DIAGRAM (1/2) —

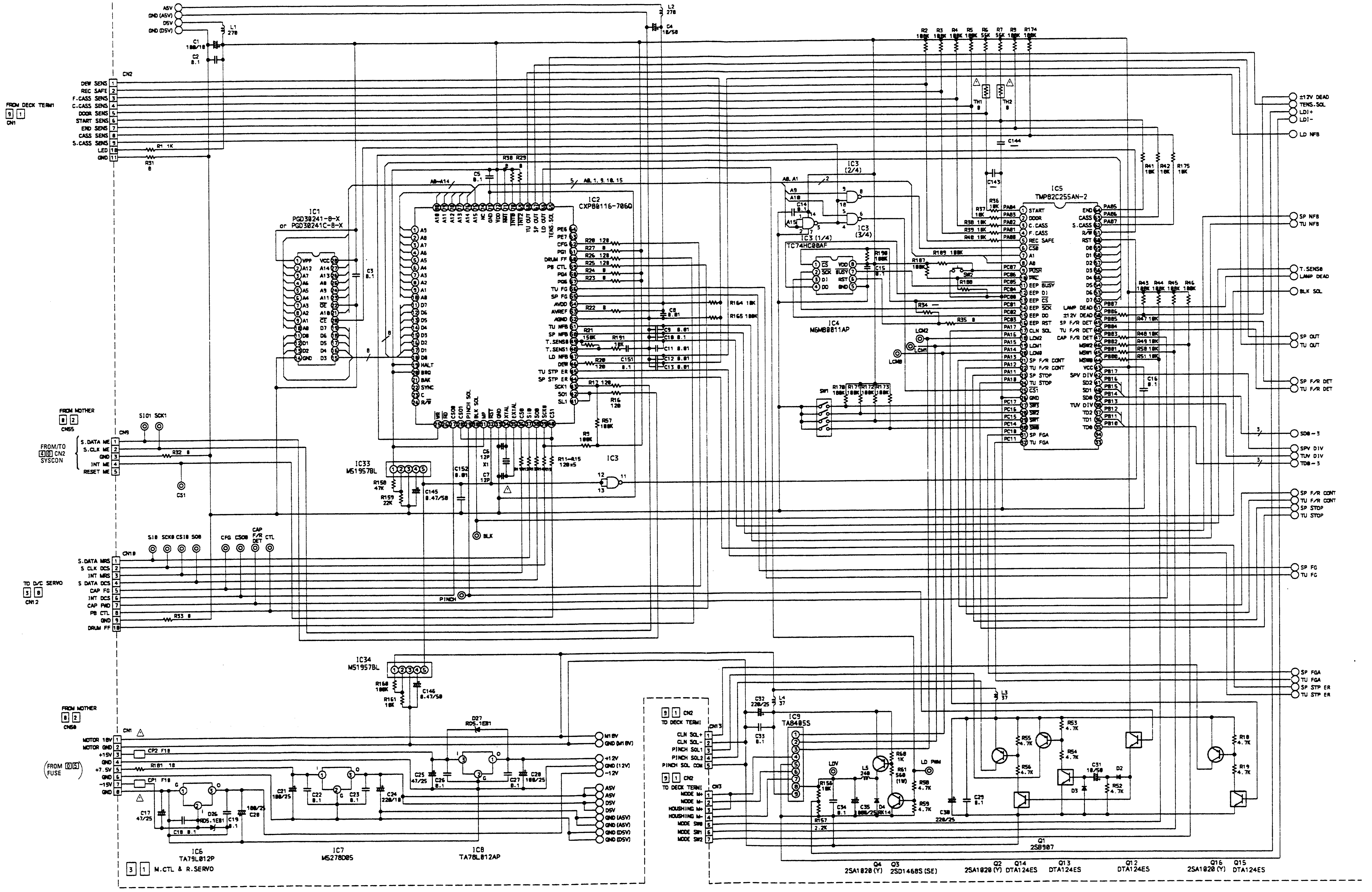

IC1
PQD30241-8-X
or PQD30241C-8-X
IC2
CXP80116-706Q
IC3 (2/4)
IC3 (3/4)
IC3 (1/4)
TC74HC00AF
IC4
M6M80011AP
IC5
TMP82C255AN-2
IC33
M51957BL
IC34
M51957BL
IC6
TA79L012P
IC7
M5278D05
IC8
TA78L012AP
IC9
TA8405S
FROM DECK TERMI
CN1
CN2
FROM MOTHER
CN55
FROM/TO
SYSCON
TO D/C SERVO
CN12
CN50
M.CTL & R.SERVO
TO DECK TERMI
CN13
Q1
2SB907
Q4 2SA1020(Y)
Q3 2SD1468S(SE)
Q2 2SA1020(Y)
Q14 DTA124ES
Q13 DTA124ES
Q12 DTA124ES
Q16 2SA1020(Y)
Q15 DTA124ES
6
5
4
3
2
1
A
B
C
D
E
F
G
H

— DIAGRAM (2/2) —

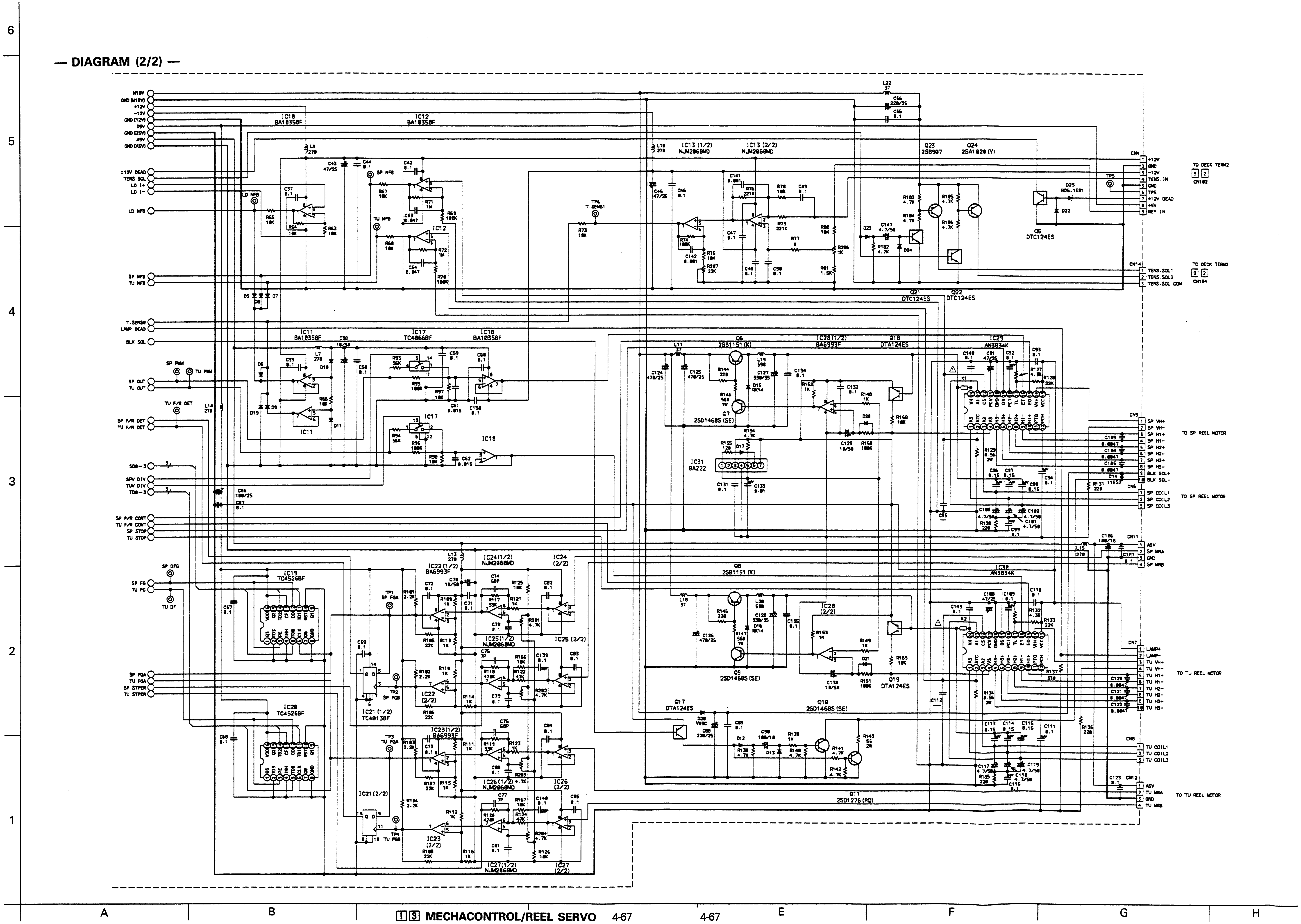
6
5
4
3
2
1
A
B
C
D
E
F
G
H
M18V
GND (M18V)
+12V
-12V
GND (12V)
D5V
GND (D5V)
A5V
GND (A5V)
±12V DEAD
TENS SOL
LD I+
LD I-
LD NFB
SP NFB
TU NFB
T.SENSE
LAMP DEAD
BLK SOL
SP PBM
TU PBM
SP OUT
TU OUT
TU F/R DET
SP F/R DET
TU F/R DET
SD0~3
SPV DIV
TUV DIV
TD0~3
SP F/R CONT
TU F/R CONT
SP STOP
TU STOP
SP DFG
SP FG
TU FG
TU DF
SP FGA
TU FGA
SP STPER
TU STPER
IC10 BA10358F
IC12 BA10358F
IC11 BA10358F
IC17 TC4066BF
IC18 BA10358F
IC13 (1/2) NJM2068MD
IC13 (2/2) NJM2068MD
IC19 TC4526BF
IC20 TC4526BF
IC21 (1/2) TC4013BF
IC21 (2/2)
IC22 (1/2) BA6993F
IC22 (2/2)
IC23 (1/2) BA6993F
IC23 (2/2)
IC24 (1/2) NJM2068MD
IC24 (2/2)
IC25 (1/2) NJM2068MD
IC25 (2/2)
IC26 (1/2) NJM2068MD
IC26 (2/2)
IC27 (1/2) NJM2068MD
IC27 (2/2)
IC28 (1/2) BA6993F
IC28 (2/2)
IC29 AN3834K
IC30 AN3834K
IC31 BA222
Q5 DTC124ES
Q6 2SB1151 (K)
Q7 2SD1468S (SE)
Q8 2SB1151 (K)
Q9 2SD1468S (SE)
Q10 2SD1468S (SE)
Q11 2SD1276 (PO)
Q17 DTA124ES
Q18 DTA124ES
Q19 DTA124ES
Q21 DTC124ES
Q22 DTC124ES
Q23 2SB907
Q24 2SA1020 (Y)
D25 RD5.1EB1
TP1 SP FGA
TP2 SP FGB
TP3 TU FGA
TP4 TU FGB
TP5
TP6 T.SENS1
CN4
+12V
GND
-12V
TENS.IN
GND
TP5
+12V DEAD
+5V
REF IN
TO DECK TERM2
CN102
CN14
TENS.SOL1
TENS.SOL2
TENS.SOL COM
TO DECK TERM2
CN104
CN5
SP VH+
SP VH-
SP H1+
SP H1-
SP H2+
SP H2-
SP H3+
SP H3-
BLK SOL+
BLK SOL-
TO SP REEL MOTOR
CN6
SP COIL1
SP COIL2
SP COIL3
TO SP REEL MOTOR
CN11
A5V
SP MRA
GND
SP MRB
CN7
LAMP+
LAMP-
TU VH+
TU VH-
TU H1+
TU H1-
TU H2+
TU H2-
TU H3+
TU H3-
TO TU REEL MOTOR
CN8
TU COIL1
TU COIL2
TU COIL3
CN12
A5V
TU MRA
GND
TU MRB
TO TU REEL MOTOR

1 3 MECHACONTROL/REEL SERVO 4-67 4-67

4.56 SYSCON SCHEMATIC DIAGRAM

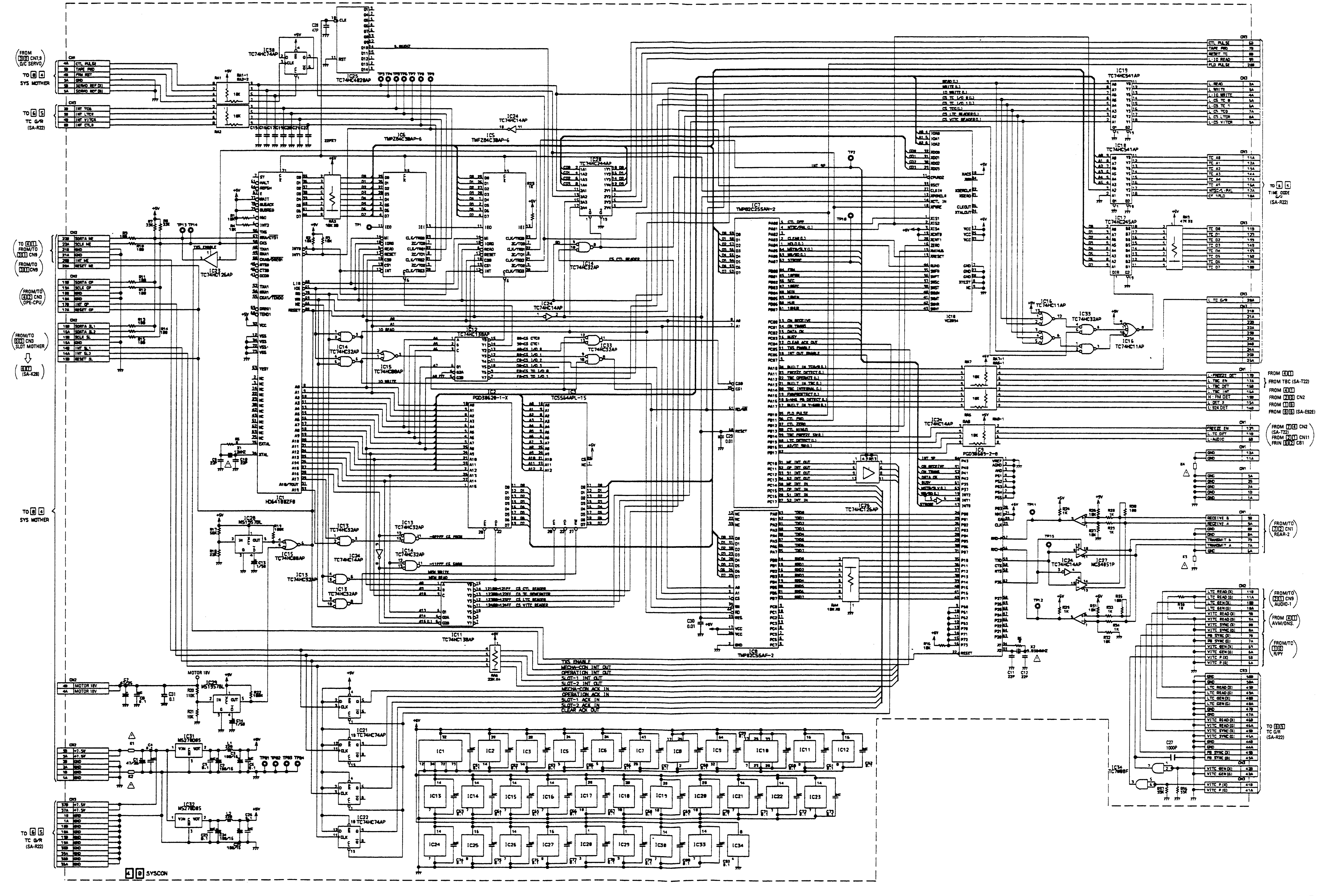
IC1 HD64180ZF8
IC2 PGD38626-1-X
IC3 TC5564APL-15
IC5 TMPZ84C30AP-6
IC6 TMPZ84C30AP-6
IC7 TMP82C255AN-2
IC8 TMP82C55AF-2
IC11 TC74HC138AP
IC12 TC74HC138AP
IC13 TC74HC32AP
IC14 TC74HC32AP
IC15 TC74HC08AP
IC16 TC74HC11AP
IC17 TC74HC245AP
IC18 TC74HC541AP
IC19 TC74HC541AP
IC21 TC74HC74AP
IC22 TC74HC74AP
IC23 TC74HC126AP
IC24 TC74HC14AP
IC25 TC74HC4020AP
IC26 TC74HC244AP
IC27 MC34051P
IC28 TC74HC74AP
IC29 M51957BL
IC31 M5278D05
IC32 M5278D05
IC33 TC74HC32AP
IC34 TC7W08F
IC35 TC74HC32AP
TO 8 4 SYS MOTHER
TO 6 5 TC G/R (SA-R22)
TO 6 5 TIME CODE G/R (SA-R22)
FROM/TO OPE-CPU
SLOT MOTHER
FROM TBC (SA-T22)
AUDIO-1
AVM/ONS.
R/PY
REAR-2
TXS ENABLE
MECHA-CON INT OUT
OPERATION INT OUT
SLOT-1 INT OUT
SLOT-2 INT OUT
MECHA-CON ACK IN
OPERATION ACK IN
SLOT-1 ACK IN
SLOT-2 ACK IN
CLEAR ACK OUT
MOTOR 18V
4 0 SYSCON

— DC Voltage —

SYMBOL No.		REC	PB
CONNECTOR			
CN1	4A	3.1	0.6
	3B	4.9	4.9
	4B	5.0	5.0
	3A	0.0	0.0
	5B	0.5	0.5
	5A	0.0	0.0
	17B	5.0	5.0
	17A	4.1	0.4
	16B	0.0	0.0
	16A	0.0	0.0
	15B	5.0	5.0
	15A	5.1	5.1
	14B	0.0	0.0
	12B	5.0	5.0
	11B	5.0	0.0
	6B	0.0	0.0
	12A	0.0	0.0
	11A	0.0	0.0
	3A	0.0	0.0
	2B	0.0	0.0
	2A	0.0	0.0
	1B	0.0	0.0
	1A	0.0	0.0
	5B	0.5	0.5
	5A	0.0	0.0
	8B	0.0	0.0
	8A	0.0	0.0
	7B	3.3	3.3
	7A	0.3	0.3
	6A	0.0	0.0
CN2	22B	1.2	0.1
	22A	4.9	4.9
	21B	0.0	0.0
	21A	0.0	0.0
	20B	3.9	4.0
	20A	5.0	5.0
	19B	1.3	0.2
	19A	4.9	4.9
	18B	0.0	0.0
	18A	0.0	0.0
	17B	3.9	4.0
	17A	5.0	5.0
	16B	1.3	0.1
	16A	1.3	0.1
	15B	4.9	4.9
	15A	0.0	0.0
	14B	3.9	3.9
	14A	5.0	5.0
	13B	5.0	5.0
	4B	15.0	15.0
	4A	15.0	15.0
	3B	7.6	7.6
	3A	7.6	7.6
	2B	0.0	0.0
	2A	0.0	0.0
	1B	0.0	0.0
	1A	0.0	0.0
	11B	0.0	0.0
	11A	0.0	0.0
	10B	0.0	5.8
	10A	0.0	0.0
	9B	1.7	1.9
	9A	0.0	0.0
	8B	4.7	4.7
	8A	0.0	0.0
	7B	4.6	4.7
	7A	0.0	0.0
	6B	0.0	0.0
	6A	0.0	0.0
	5B	0.0	0.0
	5A	0.0	0.0

4.57 SYSCON CIRCUIT BOARD

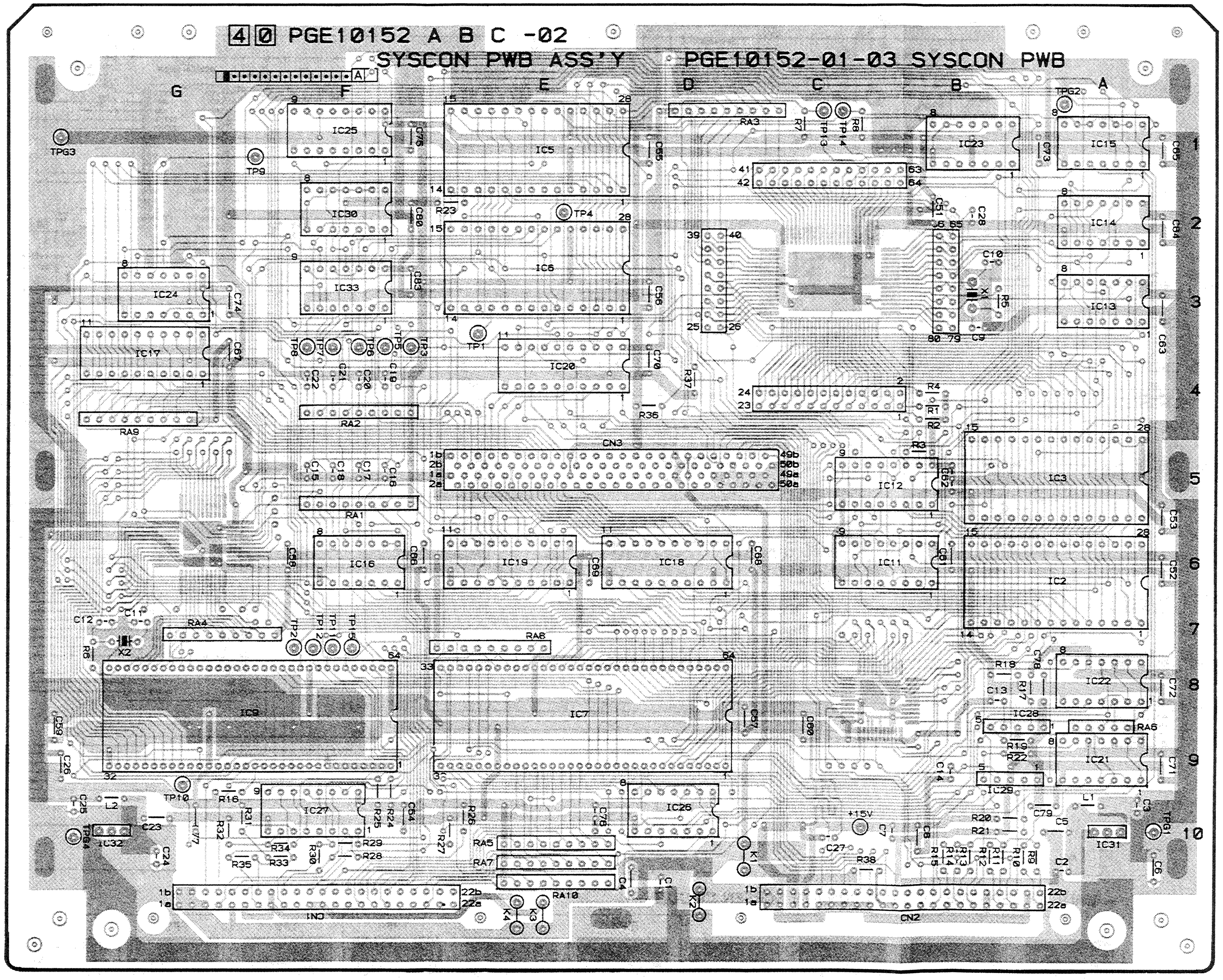

40 PGE10152 A B C -02
SYSCON PWB ASS'Y
PGE10152-01-03 SYSCON PWB
G
F
E
D
C
B
A
1
2
3
4
5
6
7
8
9
10
IC2
IC3
IC5
IC6
IC7
IC9
IC11
IC12
IC13
IC14
IC15
IC16
IC17
IC18
IC19
IC20
IC21
IC22
IC23
IC24
IC25
IC26
IC27
IC28
IC29
IC30
IC31
IC32
IC33
CN1
CN2
CN3
RA1
RA2
RA3
RA4
RA5
RA6
RA7
RA8
RA9
RA10
X1
X2
TPG1
TPG2
TPG3
TP1
TP2
TP3
TP4
TP5
TP6
TP7
TP8
TP9
TP10
TP11
TP12
TP13
TP14
TP15
TPG4
+15V
K1
K2
K3
K4
L1
L2

4.58 AV MICOM/ONSCREEN SCHEMATIC DIAGRAM

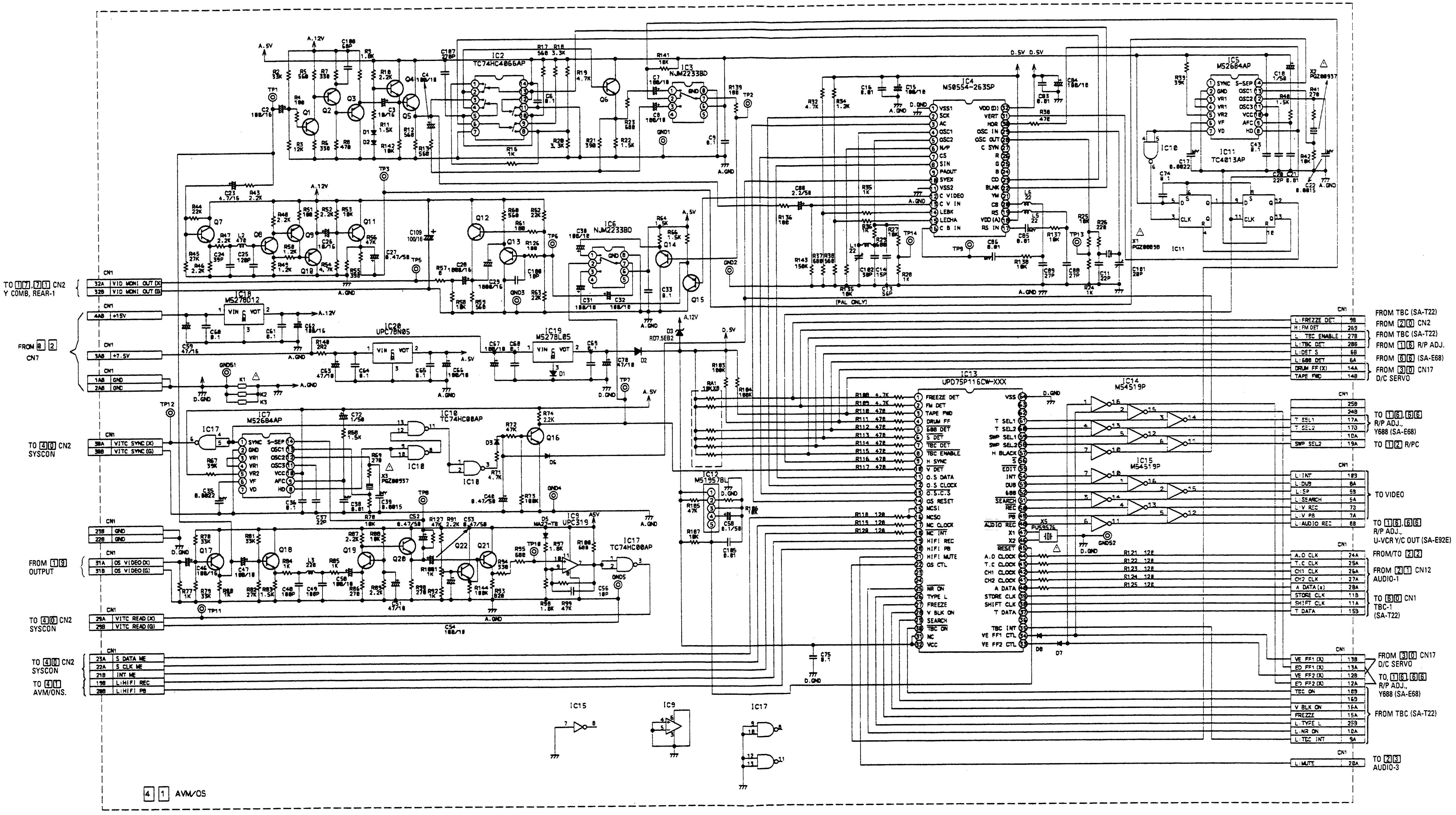

TO 1 7, 7 1 CN2
Y COMB, REAR-1
CN1
32A VID MONI OUT (X)
32B VID MONI OUT (G)
FROM 8 2
CN7
4AB +15V
3AB +7.5V
1AB GND
2AB GND
TO 4 0 CN2
SYSCON
38A VITC SYNC (X)
38B VITC SYNC (G)
23B GND
22B GND
FROM 1 3
OUTPUT
31A OS VIDEO (X)
31B OS VIDEO (G)
TO 4 0 CN2
SYSCON
29A VITC READ (X)
29B VITC READ (G)
TO 4 0 CN2
SYSCON
TO 4 1
AVM/ONS.
23A S DATA ME
24A S CLK ME
21B INT ME
19B L:HIFI REC
20B L:HIFI PB
IC2 TC74HC4066AP
IC3 NJM2233BD
IC4 M50554-263SP
IC5 M52684AP
IC6 NJM2233BD
IC7 M52684AP
IC9 UPC319
IC10 TC74HC08AP
IC11 TC4013AP
IC12 M51957BL
IC13 UPD75P116CW-XXX
IC14 M54519P
IC15 M54519P
IC17 TC74HC00AP
IC18 M5278L12
IC19 M5278L05
IC20 UPC78N05
X1 PGZ0005B
X2 PGZ0037
X3 PGZ0037
X5 PUS957
TP1
TP2
TP3
TP5
TP6
TP7
TP8
TP9
TP10
TP11
TP12
TP13
TP14
A.5V
A.12V
D.5V
A.GND
D.GND
(PAL ONLY)
FROM TBC (SA-T22)
L:FREZZE DET 9B
H:FM DET 26B
FROM 2 0 CN2
L: TBC ENABLE 27B
L:TBC DET 28B
FROM TBC (SA-T22)
FROM 1 6 R/P ADJ.
L:DET S 6B
L:688 DET 6A
FROM 6 6 (SA-E68)
DRUM FF (X) 14A
TAPE FWD 14B
FROM 3 0 CN17
D/C SERVO
25B
24B
T SEL1 17A
T SEL2 17B
18A
TO 1 6, 6 6
R/P ADJ.,
Y688 (SA-E68)
SWP SEL2 19A
TO 1 2 R/PC
L:INT 18B
L:DUB 8A
L:SP 5B
L:SEARCH 5A
L:V REC 7B
L:V PB 7A
TO VIDEO
L:AUDIO REC 8B
TO 1 6, 6 6
R/P ADJ.,
U-VCR Y/C OUT (SA-E92E)
A.D CLK 24A
FROM/TO 2 2
T.C CLK 25A
CH1 CLK 26A
CH2 CLK 27A
A DATA (x) 28A
FROM 2 1 CN12
AUDIO-1
STORE CLK 11B
SHIFT CLK 11A
T DATA 15B
TO 6 0 CN1
TBC-1
(SA-T22)
VE FF1 (X) 13B
ED FF1 (X) 13A
VE FF2 (X) 12B
ED FF2 (X) 12A
FROM 3 0 CN17
D/C SERVO
TO, 1 6, 6 6
R/P ADJ.,
Y688 (SA-E68)
TBC ON 18B
16B
V BLK ON 16A
FREZZE 15A
L:TYPE L 25B
L:NR ON 10A
L:TBC INT 9A
FROM TBC (SA-T22)
L:MUTE 20A
TO 2 3
AUDIO-3
IC15
IC9
IC17
4 1 AVM/OS

— MAIN WAVEFORMS OF AV MICOM/ON SCREEN CIRCUIT —

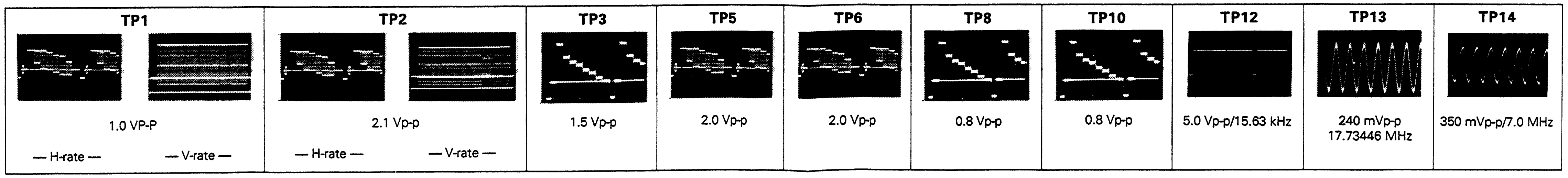

4.59 AV MICOM/ONSCREEN & COUNTER DISPLAY CIRCUIT BOARDS

— DC Voltage —

SYMBOL	No.	REC	PB
INTEGRATED CIRCUIT			
IC2	1	—	2.2
	2	—	2.5
	3	—	2.5
	4	—	2.5
	5	—	4.7
	6	—	0.3
	7	—	0.0
	8	—	2.2
	9	—	5.0
	10	—	4.6
	11	—	0.0
	12	—	0.5
	13	—	0.5
	14	—	5.1
IC3	1	—	3.1
	2	—	0.9
	3	—	3.1
	4	—	0.0
	5	—	0.0
	6	—	5.1
	7	—	2.3
	8	—	0.0
IC4	1	—	0.0
	2	—	3.9
	3	—	5.1
	4	—	2.4
	5	—	2.3
	6	—	5.0
	7	—	1.2
	8	—	3.7
	9	—	0.8
	10	—	5.0
	11	—	0.0
	12	—	1.0
	13	—	1.0
	14	—	0.7
	15	—	1.9
	16	—	0.7
	17	—	0.9
	18	—	5.1
	19	—	0.1
	20	—	0.0
	21	—	0.0
	22	—	0.5
	23	—	0.3
	24	—	0.1
	25	—	0.2
	26	—	0.1
	27	—	4.6
	28	—	2.0
	29	—	2.1
	30	—	4.1
	31	—	5.0
	32	—	5.1
IC5	1	—	1.1
	2	—	0.0
	3	—	1.1
	4	—	1.1
	5	—	3.4
	6	—	0.3
	7	—	4.3
	8	—	4.1
	9	—	2.7
	10	—	5.1
	11	—	2.1
	12	—	2.2
	13	—	3.0
	14	—	3.5
IC6	1	—	3.1
	2	—	0.1
	3	—	3.1
	4	—	0.0
	5	—	0.0
	6	—	5.1
	7	—	2.3
	8	—	0.0
IC7	1	—	1.1
	2	—	0.0
	3	—	1.1
	4	—	1.1
	5	—	3.4
	6	—	0.3
	7	—	4.3
IC7	8	—	4.0
	9	—	2.7
	10	—	5.1
	11	—	2.1
	12	—	2.2
	13	—	3.0
	14	—	3.3
IC9	1	—	0.0
	2	—	0.0
	3	—	0.0
	4	—	0.0
	5	—	0.0
	6	—	0.0
	7	—	3.5
	8	—	0.0
	9	—	1.25
	10	—	1.2
	11	—	5.1
	12	—	0.0
	13	—	0.0
	14	—	0.0
IC10	1	—	4.8
	2	—	4.8
	3	—	0.3
	4	—	4.3
	5	—	4.3
	6	—	0.2
	7	—	0.0
	8	—	0.4
	9	—	4.0
	10	—	4.0
	11	—	4.8
	12	—	0.4
	13	—	1.1
	14	—	5.1
IC11	1	—	0.0
	2	—	5.1
	3	—	0.2
	4	—	0.0
	5	—	5.1
	6	—	0.0
	7	—	0.0
	8	—	0.0
	9	—	0.0
	10	—	0.0
	11	—	4.1
	12	—	5.1
	13	—	0.0
	14	—	5.1
IC12	1	—	5.1
	2	—	1.4
	3	—	0.0
	4	—	1.3
	5	—	5.1
IC13	1	—	5.0
	2	—	5.1
	3	—	5.0
	4	—	5.1
	5	—	0.3
	6	—	5.2
	7	—	0.3
	8	—	4.2
	9	—	4.1
	10	—	0.3
	11	—	3.7
	12	—	3.9
	13	—	1.2
	14	—	5.1
	15	—	0.4
	16	—	0.4
	17	—	5.0
	18	—	4.1
	19	—	9.7
	20	—	12.0
	21	—	0.7
	22	—	0.9
	23	—	0.6
	24	—	0.6
	25	—	0.7
	26	—	0.9
	27	—	5.1
	28	—	0.9
	29	—	0.6
	30	—	0.9
	31	—	5.1
IC13	32	—	5.1
	33	—	0.9
	34	—	0.9
	35	—	0.2
	36	—	0.9
	37	—	5.1
	38	—	5.1
	39	—	0.9
	40	—	0.9
	41	—	0.9
	42	—	0.9
	43	—	0.9
	44	—	0.9
	45	—	5.1
	46	—	3.0
	47	—	2.8
	48	—	0.9
	49	—	0.9
	50	—	0.9
	51	—	0.9
	52	—	5.1
	53	—	0.9
	54	—	0.9
	55	—	0.9
	56	—	0.9
	57	—	0.9
	58	—	0.9
	59	—	5.1
	60	—	0.9
	61	—	0.9
	62	—	0.9
	63	—	0.9
	64	—	0.9
IC14	1	—	0.9
	2	—	0.9
	3	—	0.9
	4	—	0.9
	5	—	5.1
	6	—	0.9
	7	—	0.9
	8	—	0.0
	9	—	0.0
	10	—	5.0
	11	—	4.6
	12	—	0.3
	13	—	4.6
	14	—	4.6
	15	—	0.0
	16	—	0.0
IC15	1	—	0.9
	2	—	5.1
	3	—	0.9
	4	—	0.9
	5	—	0.9
	6	—	0.9
	7	—	0.9
	8	—	0.0
	9	—	0.0
	10	—	9.8
	11	—	0.0
	12	—	4.9
	13	—	4.9
	14	—	4.7
	15	—	0.7
	16	—	4.5
IC17	1	—	3.4
	2	—	3.4
	3	—	1.8
	4	—	0.0
	5	—	1.1
	6	—	4.7
	7	—	0.0
	8	—	5.1
	9	—	5.1
	10	—	0.9
	11	—	5.1
	12	—	0.0
	13	—	0.9
	14	—	5.1
IC18	1	—	15.1
	2	—	0.0
	3	—	12.0
IC19	1	—	5.1
	2	—	0.0
	3	—	7.4
IC20	1	—	7.2
	2	—	0.0
	3	—	5.1
TRANSISTOR			
Q1	B	—	1.9
	C	—	8.2
	E	—	2.3
Q2	B	—	8.2
	C	—	4.6
	E	—	8.9
Q3	B	—	4.6
	C	—	0.0
	E	—	5.2
Q4	B	—	2.8
	C	—	5.1
	E	—	3.2
Q5	B	—	3.2
	C	—	5.1
	E	—	2.5
Q6	B	—	2.5
	C	—	5.1
	E	—	1.9
Q7	B	—	6.4
	C	—	12.0
	E	—	5.8
Q8	B	—	5.8
	C	—	11.0
	E	—	5.2
Q9	B	—	11.0
	C	—	9.6
	E	—	11.7
Q10	B	—	9.6
	C	—	0.0
	E	—	10.2
Q11	B	—	2.5
	C	—	12.0
	E	—	1.8
Q12	B	—	6.0
	C	—	12.0
	E	—	5.3
Q13	B	—	6.0
	C	—	0.0
	E	—	6.7
Q14	B	—	2.3
	C	—	0.0
	E	—	3.0
Q15	B	—	1.0
	C	—	0.0
	E	—	1.7
Q16	B	—	0.7
	C	—	0.1
	E	—	0.0
Q17	B	—	2.5
	C	—	5.1
	E	—	1.8
Q18	B	—	2.3
	C	—	5.1
	E	—	1.6
Q19	B	—	1.0
	C	—	2.7
	E	—	0.3
Q20	B	—	2.7
	C	—	5.1
	E	—	2.1
Q21	B	—	1.8
	C	—	5.1
	E	—	1.2
CONNECTOR			
CN1	32A	—	0.0
	32B	—	0.0
	4AB	—	15.1
	3AB	—	7.4
	1AB	—	0.0
	2AB	—	0.0
	30A	—	4.7
	30B	—	0.0
	23B	—	0.0
	22B	—	0.0
	31A	—	0.0
	31B	—	0.0
	29A	—	1.8
	29B	—	0.0
	23A	—	0.3
	22A	—	4.9
	21B	—	4.1
	19B	—	9.7
	20B	—	12.0
	9B	—	5.0
	26B	—	5.1
	27B	—	4.2
	28B	—	0.0
	6B	—	5.2
	6A	—	0.0
	14A	—	5.1
	14B	—	5.0
	25B	—	0.9
	24B	—	0.0
	17A	—	4.6
	17B	—	4.6
	18A	—	0.3
	19A	—	4.6
	10A	—	0.7
	8A	—	4.5
	5B	—	0.7
	5A	—	4.7
	7B	—	4.9
	7A	—	4.9
	8B	—	4.7
	24A	—	0.9
	25A	—	0.9
	26A	—	0.9
	28A	—	0.9
	11B	—	0.9
	11A	—	5.1
	15B	—	5.1
	13B	—	5.1
	13A	—	5.1
	12B	—	0.0
	12A	—	5.1
	18B	—	0.9
	16B	—	0.6
	16A	—	0.9
	15A	—	5.1
	25B	—	0.9
	10A	—	0.6
	9A	—	0.2
	20A	—	0.7

— AV MICOM/ON SCREEN —

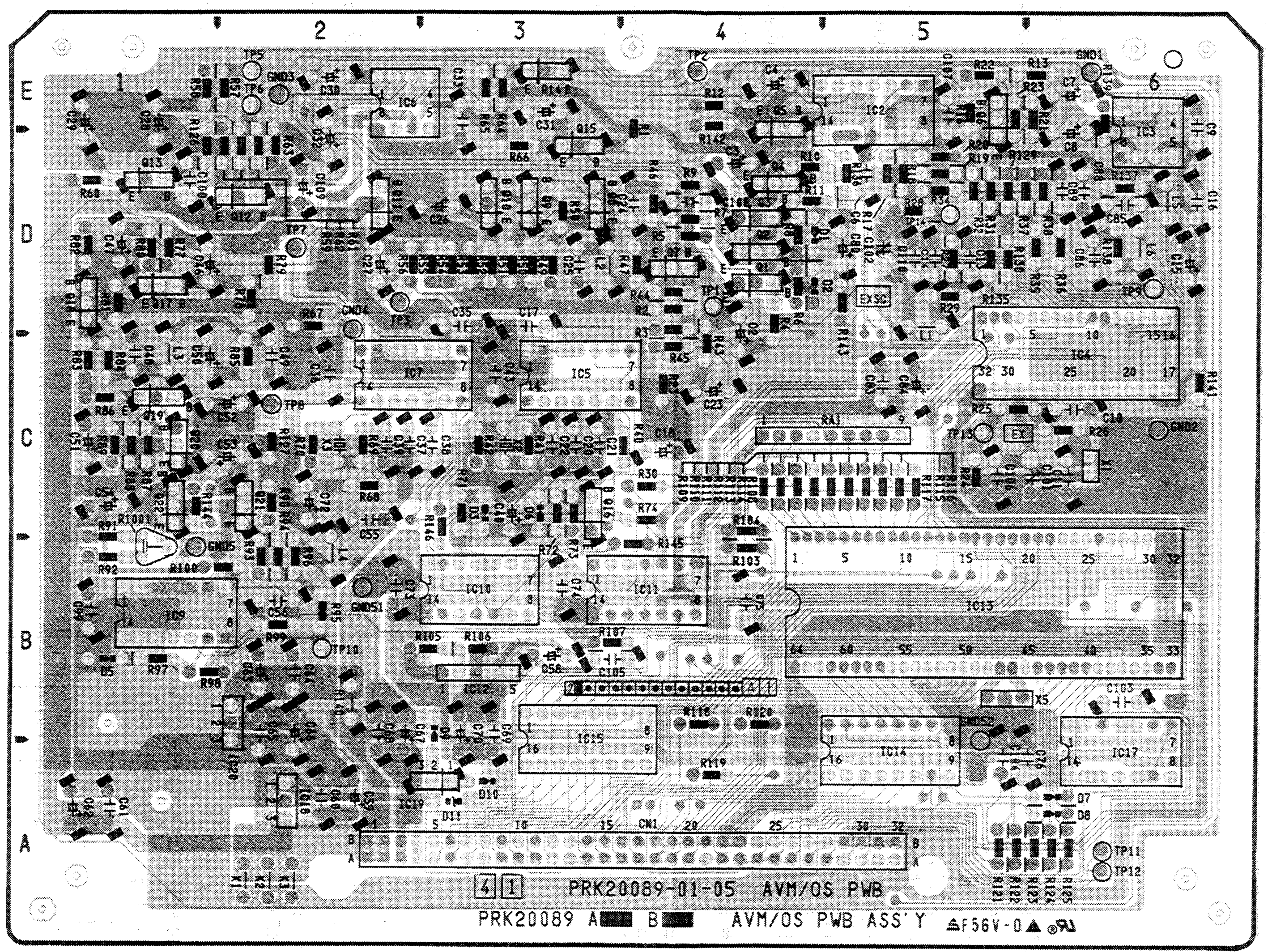

2
3
4
5
E
D
C
B
A
IC1
IC2
IC3
IC4
IC5
IC6
IC7
IC9
IC10
IC11
IC12
IC13
IC14
IC15
IC17
IC18
IC19
CN1
41 PRK20089-01-05 AVM/OS PWB
PRK20089 A B AVM/OS PWB ASS'Y

— COUNTER DISPLAY —

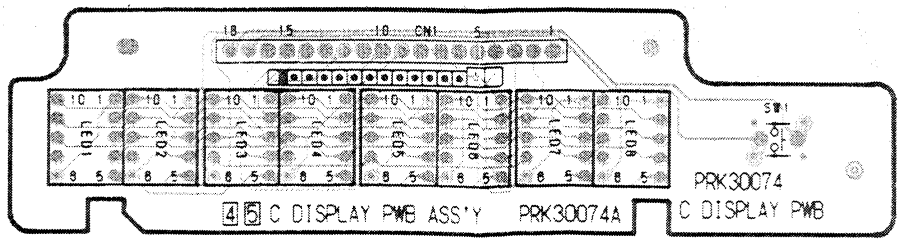

CN1
LED1
LED2
LED3
LED4
LED5
LED6
LED7
LED8
SW1
PRK30074
45 C DISPLAY PWB ASS'Y
PRK30074A
C DISPLAY PWB

4.60 OPERATION SCHEMATIC DIAGRAM

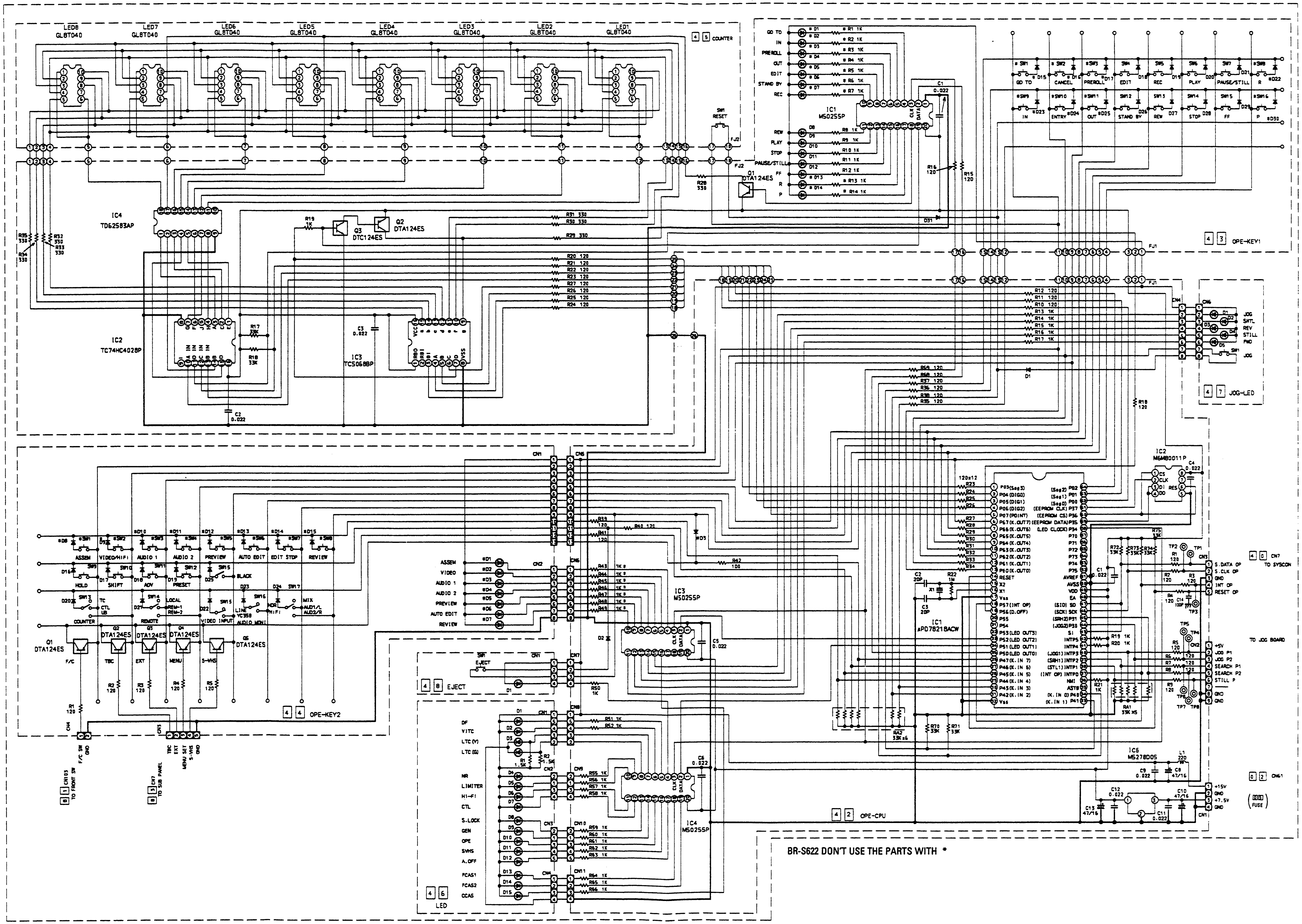
LED8 GL8T040
LED7 GL8T040
LED6 GL8T040
LED5 GL8T040
LED4 GL8T040
LED3 GL8T040
LED2 GL8T040
LED1 GL8T040
4 5 COUNTER
IC4 TD62583AP
Q3 DTC124ES
Q2 DTA124ES
IC2 TC74HC4028P
IC3 TC5068BP
C2 0.022
C3 0.022
SW1 RESET
FJ2
Q1 DTA124ES
IC1 M5025SP
GO TO
IN
PREROLL
OUT
EDIT
STAND BY
REC
REW
PLAY
STOP
PAUSE/STILL
FF
R
P
D31
4 3 OPE-KEY1
FJ1
SW1 GO TO
SW2 CANCEL
SW3 PREROLL
SW4 EDIT
SW5 REC
SW6 PLAY
SW7 PAUSE/STILL
SW8 R
SW9 IN
SW10 ENTRY
SW11 OUT
SW12 STAND BY
SW13 REW
SW14 STOP
SW15 FF
SW16 P
CN4
CN6
JOG
SHTL
REV
STILL
FWD
4 7 JOG-LED
IC2 M6M80011P
IC1 μPD78218ACW
RESET
AVREF
AVSS
VDD
4 0 CN7 TO SYSCON
S.DATA OP
S.CLK OP
GND
INT OP
RESET OP
TO JOG BOARD
+5V
JOG P1
JOG P2
SEARCH P1
SEARCH P2
STILL P
RA1 33K×5
RA2 33K×6
IC5 M5278D05
L1 220
0 2 CN61
+15V
GND
+7.5V
GND
(FUSE)
4 2 OPE-CPU
ASSEM
VIDEO/HIFI
AUDIO 1
AUDIO 2
PREVIEW
AUTO EDIT
EDIT STOP
REVIEW
HOLD
SHIFT
ADV
PRESET
BLACK
COUNTER
TC CTL UB
LOCAL REM-1 REM-2
REMOTE
VIDEO INPUT
LINE YC358
NOR HIFI
MIX AUD1/L AUD2/R
AUDIO MONI
Q1 DTA124ES
Q2 DTA124ES
Q3 DTA124ES
Q4 DTA124ES
Q5 DTA124ES
F/C
TBC
EXT
MENU
S-VHS
4 4 OPE-KEY2
CN4
CN3
F/C SW
GND
TBC
EXT
MENU SET
S-VHS
GND
8 1 CN105 TO FRONT SW
8 3 CN7 TO SUB PANEL
CN1
CN5
CN2
CN6
VIDEO
AUTO EDIT
IC3 M5025SP
SW1 EJECT
4 8 EJECT
CN7
DF
VITC
LTC (V)
LTC (G)
NR
LIMITER
HI-FI
CTL
S.LOCK
GEN
OPE
SVHS
A.OFF
FCAS1
FCAS2
CCAS
IC4 M5025SP
4 6 LED
BR-S622 DON'T USE THE PARTS WITH *

4.61 OPERATION CIRCUIT BOARD

— DC Voltage —

SYMBOL	No.	REC	PB
INTEGRATED CIRCUIT			
IC1	1	—	0.1
	2	—	2.5
	3	—	2.6
	4	—	2.5
	5	—	0.6
	6	—	0.0
	7	—	0.0
	8	—	0.0
	9	—	0.0
	10	—	0.0
	11	—	0.0
	12	—	0.0
	13	—	0.0
	14	—	5.0
	15	—	2.4
	16	—	2.3
	17	—	0.0
	18	—	4.0
	19	—	0.1
	20	—	0.0
	21	—	0.0
	22	—	0.0
	23	—	0.1
	24	—	0.1
	25	—	0.1
	26	—	0.1
	27	—	0.1
	28	—	0.0
	29	—	0.0
	30	—	0.0
	31	—	0.0
	32	—	0.0
	33	—	0.0
	34	—	0.0
	35	—	0.0
	36	—	5.1
	37	—	4.0
	38	—	0.0
	39	—	0.0
	40	—	5.0
	41	—	5.1
	42	—	5.1
	43	—	0.2
	44	—	0.0
	45	—	5.0
	46	—	4.9
	47	—	0.2
	48	—	5.1
	49	—	5.1
	50	—	0.0
	51	—	0.0
	52	—	0.0
	53	—	0.0
	54	—	0.1
	55	—	0.1
IC1	56	—	0.1
	57	—	0.1
	58	—	0.0
	59	—	0.0
	60	—	5.2
	61	—	5.2
	62	—	5.2
	63	—	0.0
	64	—	0.0
IC2	1	—	5.2
	2	—	5.2
	3	—	0.0
	4	—	0.0
	5	—	0.0
	6	—	5.2
	7	—	5.2
	8	—	5.2
IC3	1	—	0.0
	2	—	0.0
	3	—	0.0
	4	—	13.5
	5	—	13.4
	6	—	13.5
	7	—	13.5
	8	—	13.4
	9	—	13.4
	10	—	0.0
	11	—	13.5
	12	—	13.7
	13	—	13.5
	14	—	13.5
IC3	15	—	13.5
	16	—	0.1
	17	—	0.1
	18	—	0.1
	19	—	0.1
	20	—	5.2
IC4	1	—	0.0
	2	—	0.0
	3	—	0.0
	4	—	13.6
	5	—	13.6
	6	—	0.0
	7	—	1.9
	8	—	2.0
	9	—	13.5
	10	—	13.5
	11	—	13.5
	12	—	13.5
	13	—	13.6
	14	—	13.6
	15	—	13.5
	16	—	13.5
IC4	17	—	13.5
	18	—	13.5
	19	—	13.5
	20	—	5.2
IC6	1	—	5.2
	2	—	0.0
	3	—	7.6
CONNECTOR			
CN1	1	—	0.0
	2	—	0.0
	3	—	7.6
	4	—	0.0
CN2	1	—	15.0
	2	—	0.0
	3	—	0.0
	4	—	0.0
	5	—	5.0
	6	—	0.0
	7	—	0.0
	8	—	0.0
	9	—	-0.1
CN3	1	—	1.0
	2	—	4.9
	3	—	0.0
	4	—	4.0
	5	—	5.0
CN4	1	—	15.0
	2	—	0.0
	3	—	13.3
	4	—	13.4
	5	—	13.6
	6	—	13.4
	7	—	0.0
	8	—	0.1
CN5	1	—	0.0
	2	—	0.0
	3	—	0.0
	4	—	0.0
	5	—	0.0
	6	—	0.0
	7	—	0.0
	8	—	0.0
	9	—	0.0
	10	—	0.0
	11	—	0.0
	12	—	0.0
	13	—	15.0
CN6	1	—	0.0
	2	—	0.0
CN6	3	—	13.3
	4	—	13.3
	5	—	13.4
	6	—	13.4
	7	—	13.3
	8	—	13.4
CN7	1	—	14.9
	2	—	-0.3
	3	—	0.0
	4	—	13.5
CN8	1	—	14.9
	2	—	2.0
	3	—	0.5
	4	—	13.4
	5	—	13.5
CN9	1	—	13.4
	2	—	12.9
	3	—	12.9
	4	—	13.4
CN10	1	—	13.5
	2	—	12.9
	3	—	12.9
	4	—	13.4
	5	—	13.4
CN11	1	—	12.9
	2	—	12.9
	3	—	12.9
	4	—	0.0

— OPERATION CPU —

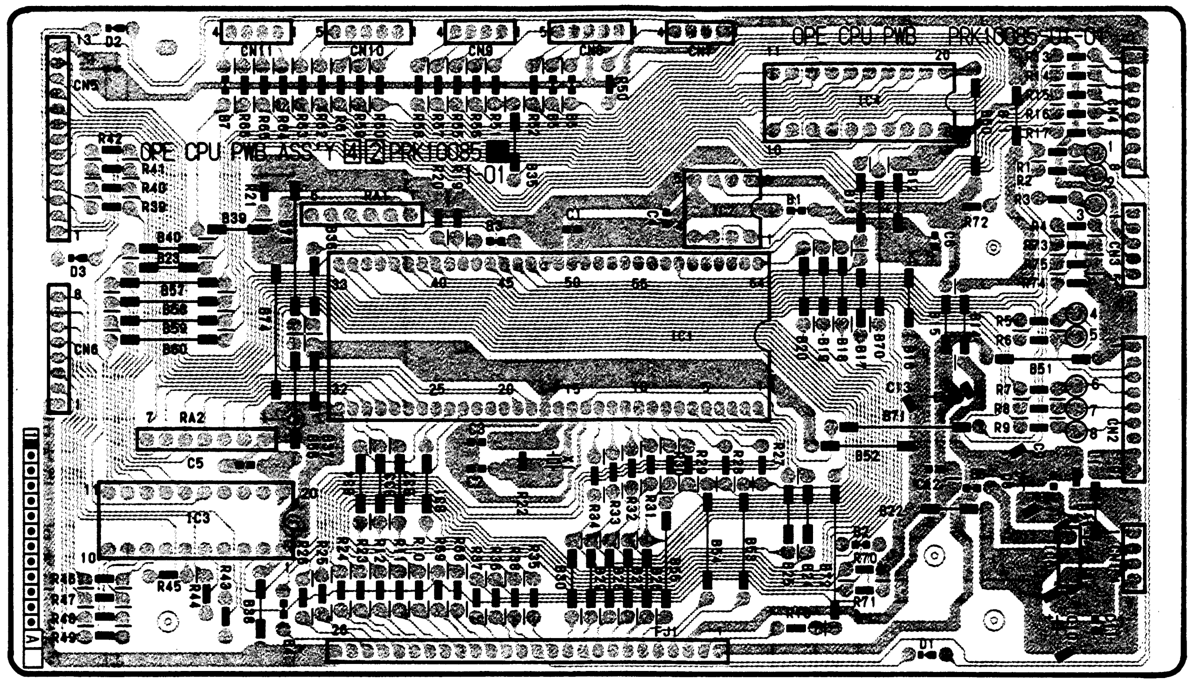
OPE CPU PWB PRK10085-01-0
OPE CPU PWB ASS'Y 4 2 PRK10085 -01
IC1
IC3
IC4
RA2
CN2

— MAIN LED —

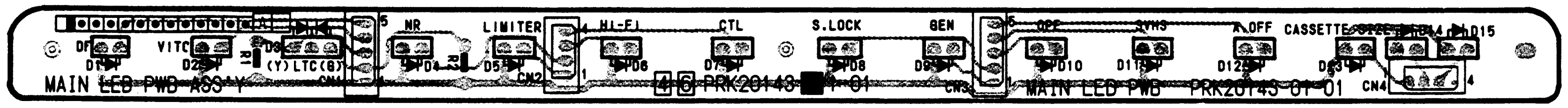
NR
LIMITER
HI-FI
CTL
S.LOCK
GEN
OPE
SYNS
A.OFF
CASSETTE
MAIN LED PWB ASS'Y
4 6 PRK20143 -01
MAIN LED PWB PRK20143-01-01

— OPERATION KEY-1 —

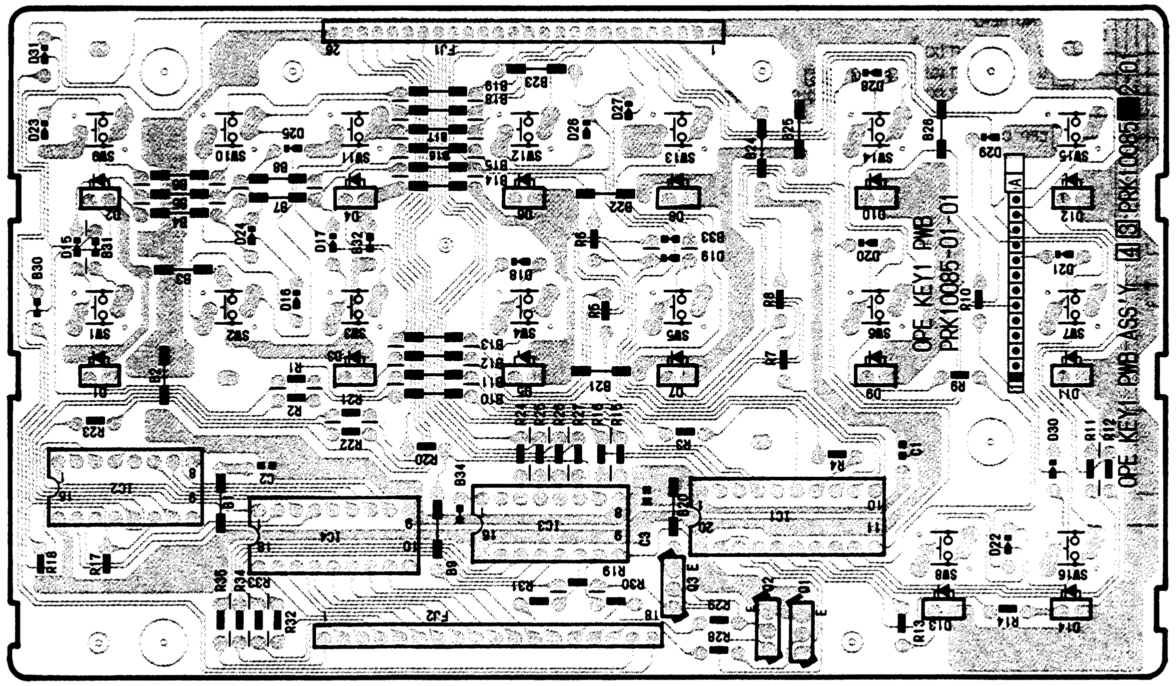
OPE KEY1 PWB PRK10085-01-01
OPE KEY1 PWB ASS'Y 4 3 PRK10085

— OPERATION KEY-2 —

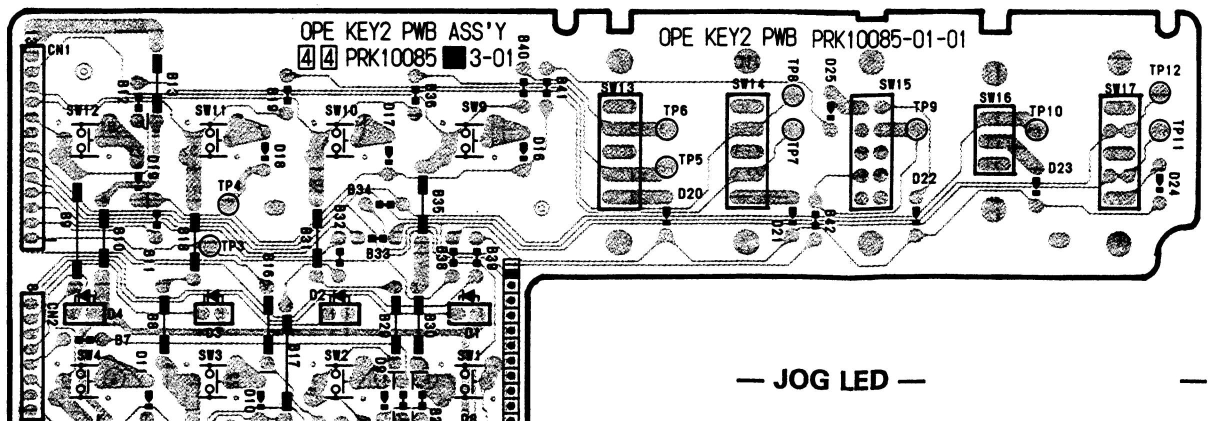
OPE KEY2 PWB ASS'Y
4 4 PRK10085 3-01
OPE KEY2 PWB PRK10085-01-01

— JOG LED —

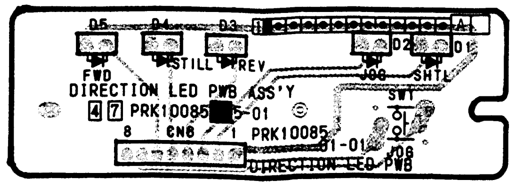
FWD
STILL
REV
JOG
SHTL
DIRECTION LED PWB ASS'Y
4 7 PRK10085 5-01
PRK10085 -01-01
DIRECTION LED PWB

— EJECT SWITCH —

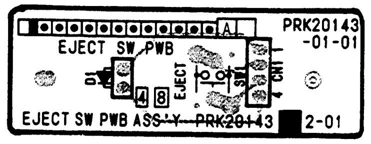
PRK20143 -01-01
EJECT SW PWB
4 8
EJECT SW PWB ASS'Y PRK20143 2-01

4.62 REAR (REAR-1 to -3) SCHEMATIC DIAGRAM

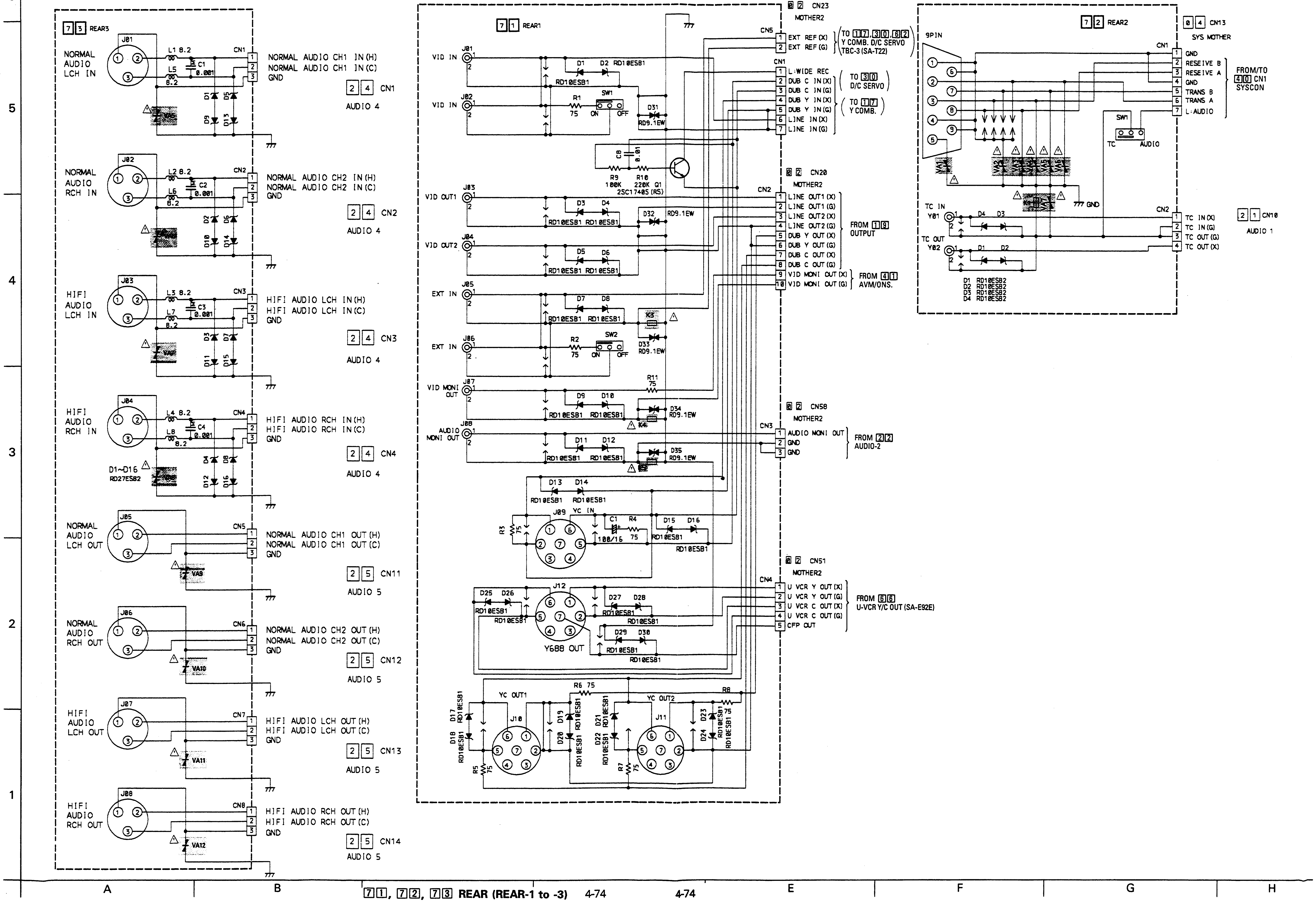
73 REAR3
J01
NORMAL AUDIO LCH IN
L1 8.2
L5 8.2
C1 0.001
CN1
NORMAL AUDIO CH1 IN(H)
NORMAL AUDIO CH1 IN(C)
GND
24 CN1
AUDIO 4
J02
NORMAL AUDIO RCH IN
L2 8.2
L6 8.2
C2 0.001
CN2
NORMAL AUDIO CH2 IN(H)
NORMAL AUDIO CH2 IN(C)
GND
24 CN2
AUDIO 4
J03
HIFI AUDIO LCH IN
L3 8.2
L7 8.2
C3 0.001
CN3
HIFI AUDIO LCH IN(H)
HIFI AUDIO LCH IN(C)
GND
24 CN3
AUDIO 4
J04
HIFI AUDIO RCH IN
L4 8.2
L8 8.2
C4 0.001
CN4
HIFI AUDIO RCH IN(H)
HIFI AUDIO RCH IN(C)
GND
24 CN4
AUDIO 4
D1~D16 RD27ES82
J05
NORMAL AUDIO LCH OUT
CN5
NORMAL AUDIO CH1 OUT(H)
NORMAL AUDIO CH1 OUT(C)
GND
25 CN11
AUDIO 5
VA9
J06
NORMAL AUDIO RCH OUT
CN6
NORMAL AUDIO CH2 OUT(H)
NORMAL AUDIO CH2 OUT(C)
GND
25 CN12
AUDIO 5
VA10
J07
HIFI AUDIO LCH OUT
CN7
HIFI AUDIO LCH OUT(H)
HIFI AUDIO LCH OUT(C)
GND
25 CN13
AUDIO 5
VA11
J08
HIFI AUDIO RCH OUT
CN8
HIFI AUDIO RCH OUT(H)
HIFI AUDIO RCH OUT(C)
GND
25 CN14
AUDIO 5
VA12
71 REAR1
J01 VID IN
J02 VID IN
D1 D2 RD10ESB1
R1 75
SW1 ON OFF
D31 RD9.1EW
C8 0.01
R9 100K
R10 220K
Q1 2SC1740S(RS)
J03 VID OUT1
D3 D4 RD10ESB1 RD10ESB1
D32 RD9.1EW
J04 VID OUT2
D5 D6 RD10ESB1 RD10ESB1
J05 EXT IN
D7 D8 RD10ESB1 RD10ESB1
K3
J06 EXT IN
R2 75
SW2 ON OFF
D33 RD9.1EW
J07 VID MONI OUT
R11 75
D9 D10 RD10ESB1 RD10ESB1
D34 RD9.1EW
K4
J08 AUDIO MONI OUT
D11 D12 RD10ESB1 RD10ESB1
D35 RD9.1EW
D13 D14 RD10ESB1 RD10ESB1
J09 YC IN
R3 75
C1 100/16
R4 75
D15 D16 RD10ESB1 RD10ESB1
J12 Y688 OUT
D25 D26 RD10ESB1 RD10ESB1
D27 D28 RD10ESB1 RD10ESB1
D29 D30 RD10ESB1 RD10ESB1
YC OUT1 J10
R6 75
D17 D18 RD10ESB1
D19 D20 RD10ESB1
R5 75
YC OUT2 J11
D21 D22 RD10ESB1
D23 D24 RD10ESB1
R7 75
R8 75
CN5
EXT REF(X)
EXT REF(G)
02 CN23 MOTHER2
TO 17,30,62 Y COMB. D/C SERVO TBC-3(SA-T22)
CN1
L:WIDE REC
DUB C IN(X)
DUB C IN(G)
DUB Y IN(X)
DUB Y IN(G)
LINE IN(X)
LINE IN(G)
TO 30 D/C SERVO
TO 17 Y COMB.
02 CN20 MOTHER2
CN2
LINE OUT1(X)
LINE OUT1(G)
LINE OUT2(X)
LINE OUT2(G)
DUB Y OUT(X)
DUB Y OUT(G)
DUB C OUT(X)
DUB C OUT(G)
VID MONI OUT(X)
VID MONI OUT(G)
FROM 19 OUTPUT
FROM 41 AVM/ONS.
02 CN58 MOTHER2
CN3
AUDIO MONI OUT
GND
GND
FROM 22 AUDIO-2
02 CN51 MOTHER2
CN4
U VCR Y OUT(X)
U VCR Y OUT(G)
U VCR C OUT(X)
U VCR C OUT(G)
CFP OUT
FROM 66 U-VCR Y/C OUT(SA-E92E)
72 REAR2
9PIN
04 CN13 SYS MOTHER
CN1
GND
RESEIVE B
RESEIVE A
GND
TRANS B
TRANS A
L:AUDIO
FROM/TO 40 CN1 SYSCON
SW1 TC AUDIO
VA1 VA2 VA3 VA4 VA5 VA6 VA7 VA8
GND
TC IN Y01
TC OUT Y02
D4 D3 D1 D2
CN2
TC IN(X)
TC IN(G)
TC OUT(G)
TC OUT(X)
21 CN10 AUDIO 1
D1 RD10ESB2
D2 RD10ESB2
D3 RD10ESB2
D4 RD10ESB2
A B C D E F G H
1 2 3 4 5 6

4.63 REAR (REAR-1 to -3) CIRCUIT BOARD

— REAR-1 —

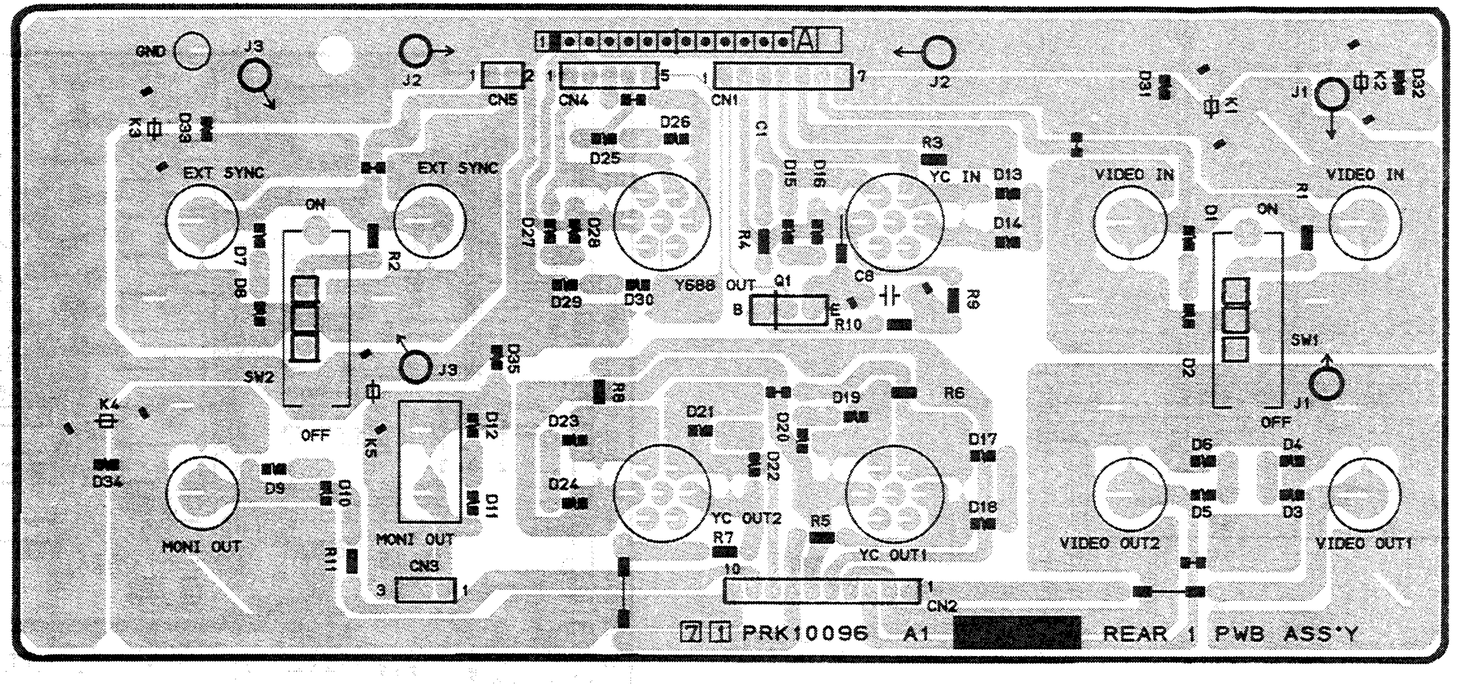
GND
J3
J2
J1
K1
K2
K3
K4
CN1
CN2
CN3
CN4
CN5
EXT SYNC
YC IN
VIDEO IN
ON
OFF
SW1
SW2
Y688 OUT
Q1
MONI OUT
YC OUT2
YC OUT1
VIDEO OUT2
VIDEO OUT1
7 1 PRK10096 A1
REAR 1 PWB ASS'Y

— REAR-3 —

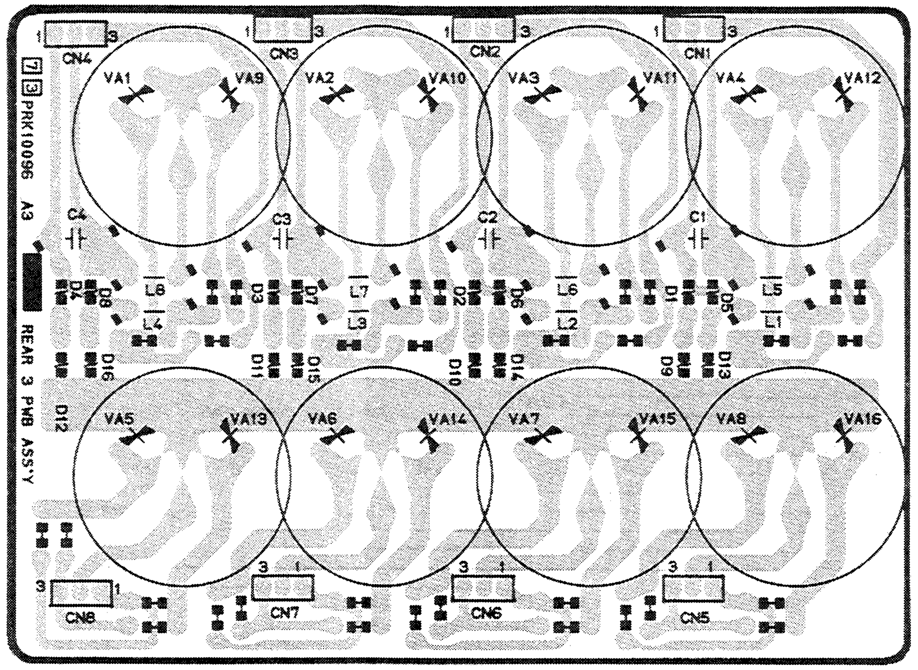
CN1
CN2
CN3
CN4
CN5
CN6
CN7
CN8
VA1
VA2
VA3
VA4
VA5
VA6
VA7
VA8
VA9
VA10
VA11
VA12
VA13
VA14
VA15
VA16
7 3 PRK10096 A3
REAR 3 PWB ASS'Y

— DC Voltage —

REAR 1 <71>

SYMBOL	No.	REC	PB
TRANSISTOR			
Q1	B	—	0.1
	C	—	5.1
	E	—	0.0
CONNECTOR			
CN1	1	—	5.1
	2	—	0.1
	3	—	0.0
	4	—	0.0
	5	—	0.0
	6	—	0.0
	7	—	0.0
CN2	1	—	0.0
	2	—	0.0
	3	—	0.0
	4	—	0.0
	5	—	0.0
	6	—	0.0
	7	—	0.0
	8	—	0.0
	9	—	0.0
	10	—	0.0
CN3	1	—	0.0
	2	—	0.0
	3	—	0.0
CN4	1	—	5.3
	2	—	0.0
	3	—	5.8
	4	—	0.0
	5	—	0.0
CN5	1	—	0.0
	2	—	0.0

REAR 2 <72>

SYMBOL	No.	REC	PB
CONNECTOR			
CN1	1	—	0.0
	2	—	2.5
	3	—	2.5
	4	—	0.0
	5	—	3.3
	6	—	0.4
	7	—	0.0
CN2	1	—	0.0
	2	—	0.0
	3	—	0.0
	4	—	0.0

REAR 3 <73>

SYMBOL	No.	REC	PB
CONNECTOR			
CN1	1	—	0.0
	2	—	0.0
	3	—	0.0
CN2	1	—	0.0
	2	—	0.0
	3	—	0.0
CN3	1	—	0.0
	2	—	0.0
	3	—	0.0
CN4	1	—	0.0
	2	—	0.0
	3	—	0.0
CN5	1	—	0.0
	2	—	0.0
	3	—	0.0
CN6	1	—	0.0
	2	—	0.0
	3	—	0.0
CN7	1	—	0.0
	2	—	0.0
	3	—	0.0
CN8	1	—	0.0
	2	—	0.0
	3	—	0.0

— REAR-2 —

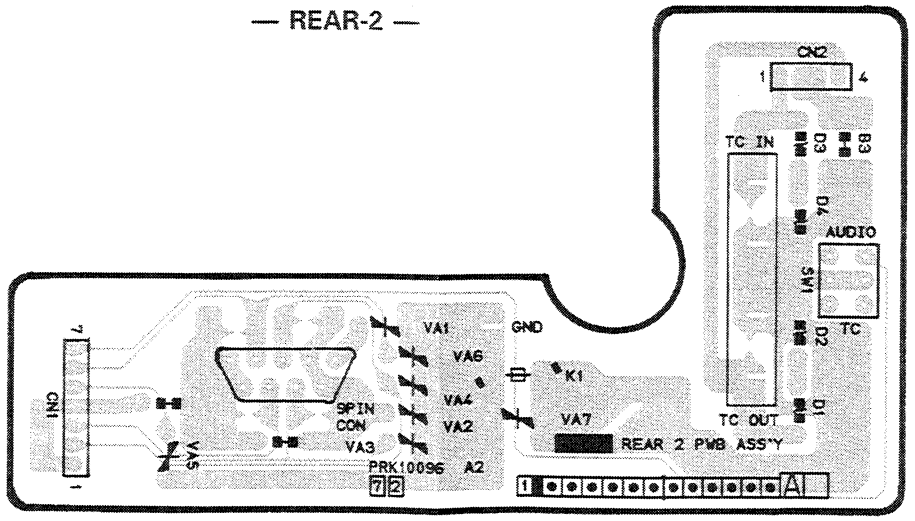
CN1
CN2
TC IN
TC OUT
AUDIO
TC
SW1
GND
K1
VA1
VA2
VA3
VA4
VA5
VA6
VA7
9PIN CON
PRK10096 A2
7 2
REAR 2 PWB ASS'Y

4.64 SUBPANEL SCHEMATIC DIAGRAM

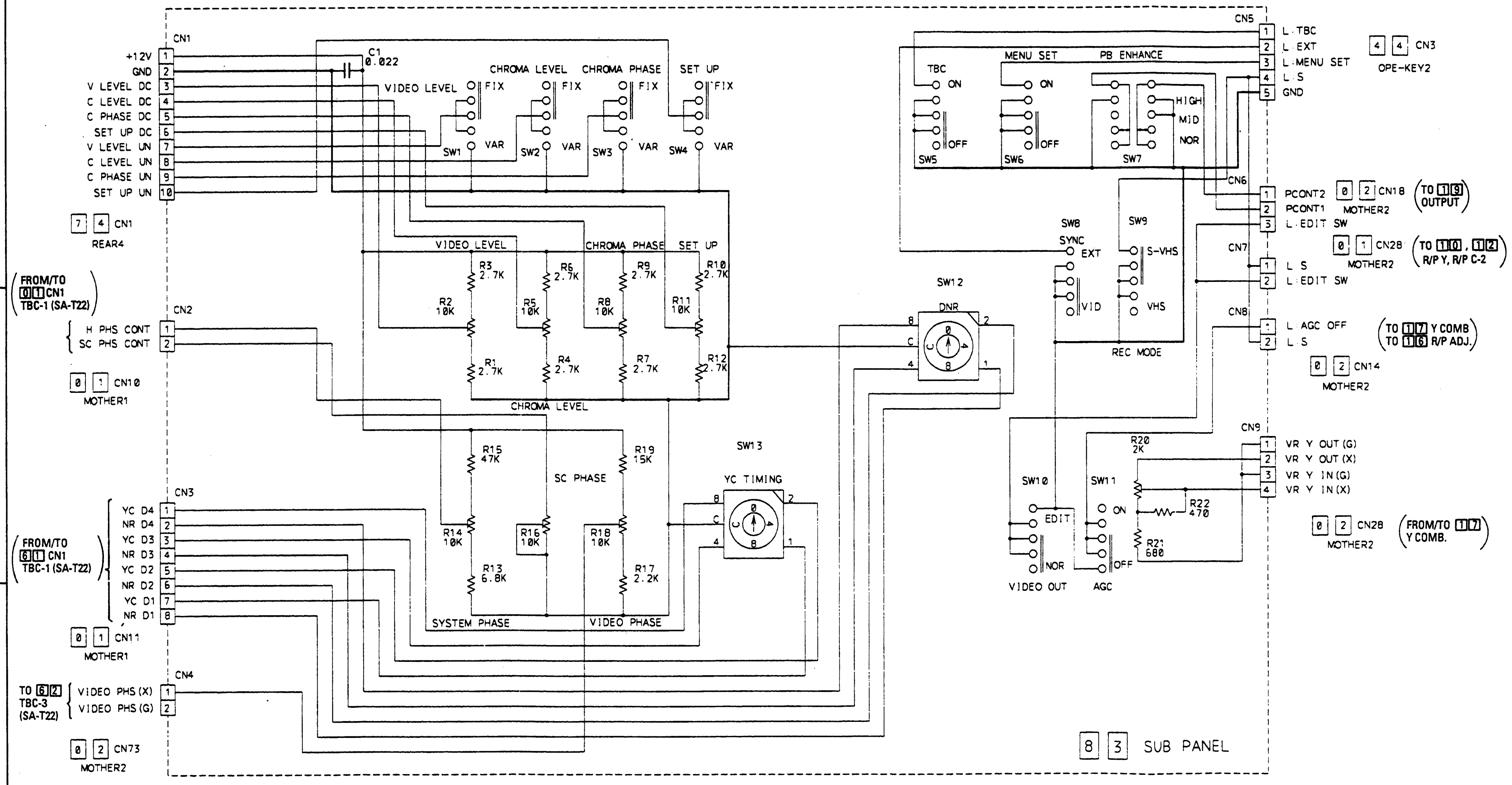
CN1
+12V 1
GND 2
V LEVEL DC 3
C LEVEL DC 4
C PHASE DC 5
SET UP DC 6
V LEVEL UN 7
C LEVEL UN 8
C PHASE UN 9
SET UP UN 10
7 4 CN1
REAR4
FROM/TO 01 CN1 TBC-1 (SA-T22)
CN2
H PHS CONT 1
SC PHS CONT 2
0 1 CN10
MOTHER1
CN3
YC D4 1
NR D4 2
YC D3 3
NR D3 4
YC D2 5
NR D2 6
YC D1 7
NR D1 8
FROM/TO 61 CN1 TBC-1 (SA-T22)
0 1 CN11
MOTHER1
CN4
TO 62 TBC-3 (SA-T22)
VIDEO PHS (X) 1
VIDEO PHS (G) 2
0 2 CN73
MOTHER2
C1 0.022
VIDEO LEVEL
CHROMA LEVEL
CHROMA PHASE
SET UP
FIX
VAR
SW1
SW2
SW3
SW4
R3 2.7K
R6 2.7K
R9 2.7K
R10 2.7K
R2 10K
R5 10K
R8 10K
R11 10K
R1 2.7K
R4 2.7K
R7 2.7K
R12 2.7K
CHROMA LEVEL
R15 47K
R19 15K
SC PHASE
R14 10K
R16 10K
R18 10K
R13 6.8K
R17 2.2K
SYSTEM PHASE
VIDEO PHASE
SW13
YC TIMING
SW12
DNR
TBC
ON
OFF
SW5
MENU SET
SW6
PB ENHANCE
HIGH
MID
NOR
SW7
SW8
SYNC
EXT
VID
SW9
S-VHS
VHS
REC MODE
SW10
EDIT
NOR
VIDEO OUT
SW11
AGC
R20 2K
R22 470
R21 680
CN5
1 L TBC
2 L EXT
3 L MENU SET
4 L S
5 GND
4 4 CN3
OPE-KEY2
CN6
1 PCONT2
2 PCONT1
3 L EDIT SW
0 2 CN18 MOTHER2
(TO 13 OUTPUT)
CN7
1 L S
2 L EDIT SW
0 1 CN28 MOTHER2
(TO 10, 12 R/P Y, R/P C-2)
CN8
1 L AGC OFF
2 L S
(TO 17 Y COMB TO 16 R/P ADJ.)
0 2 CN14
MOTHER2
CN9
1 VR Y OUT (G)
2 VR Y OUT (X)
3 VR Y IN (G)
4 VR Y IN (X)
0 2 CN28
MOTHER2
(FROM/TO 17 Y COMB.)
8 3 SUB PANEL

4.65 SUBPANEL CIRCUIT BOARD

— SUBPANEL —

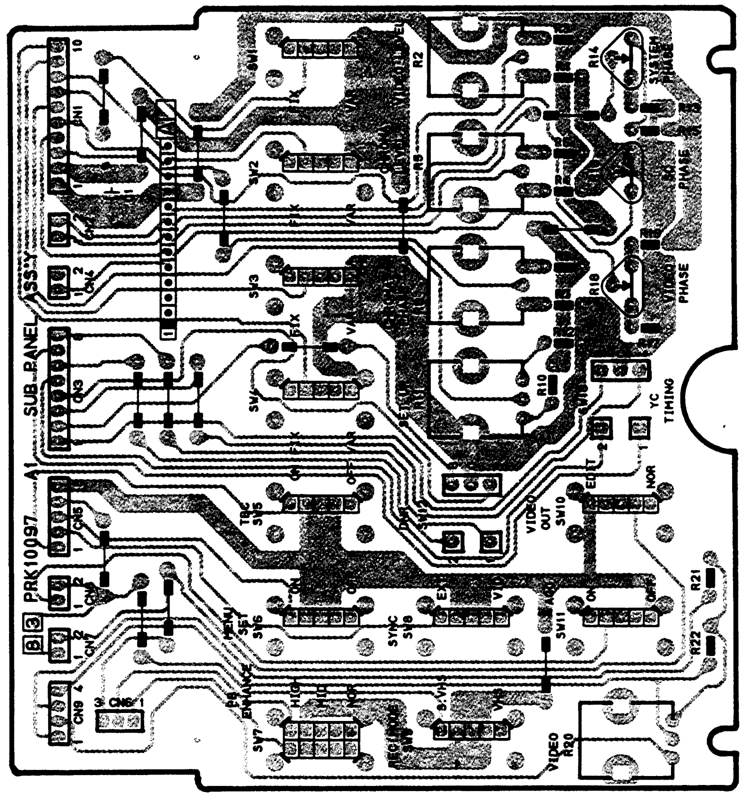
8 3 PRK10097 A1 SUB PANEL ASS'Y
SW1
SW2
SW3
SW4
SW5
SW6
SW7
SW8
SW9
SW10
SW11
SW12
SW13
R2
R14
R16
R18
R21
R22
YC TIMING
PHASE
TBC
MENU SET
SYNC
EDIT
NOR
VIDEO OUT
VIDEO R20

— TP TERMINAL —

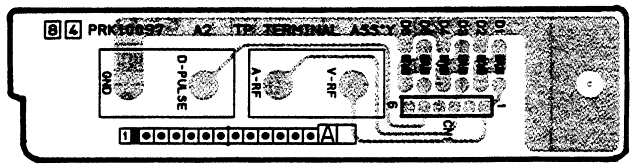
8 4 PRK10097 A2 TP TERMINAL ASS'Y
GND
D-PULSE
A-RF
V-RF
1
A1

4.66 METER SCHEMATIC DIAGRAM

— METER —

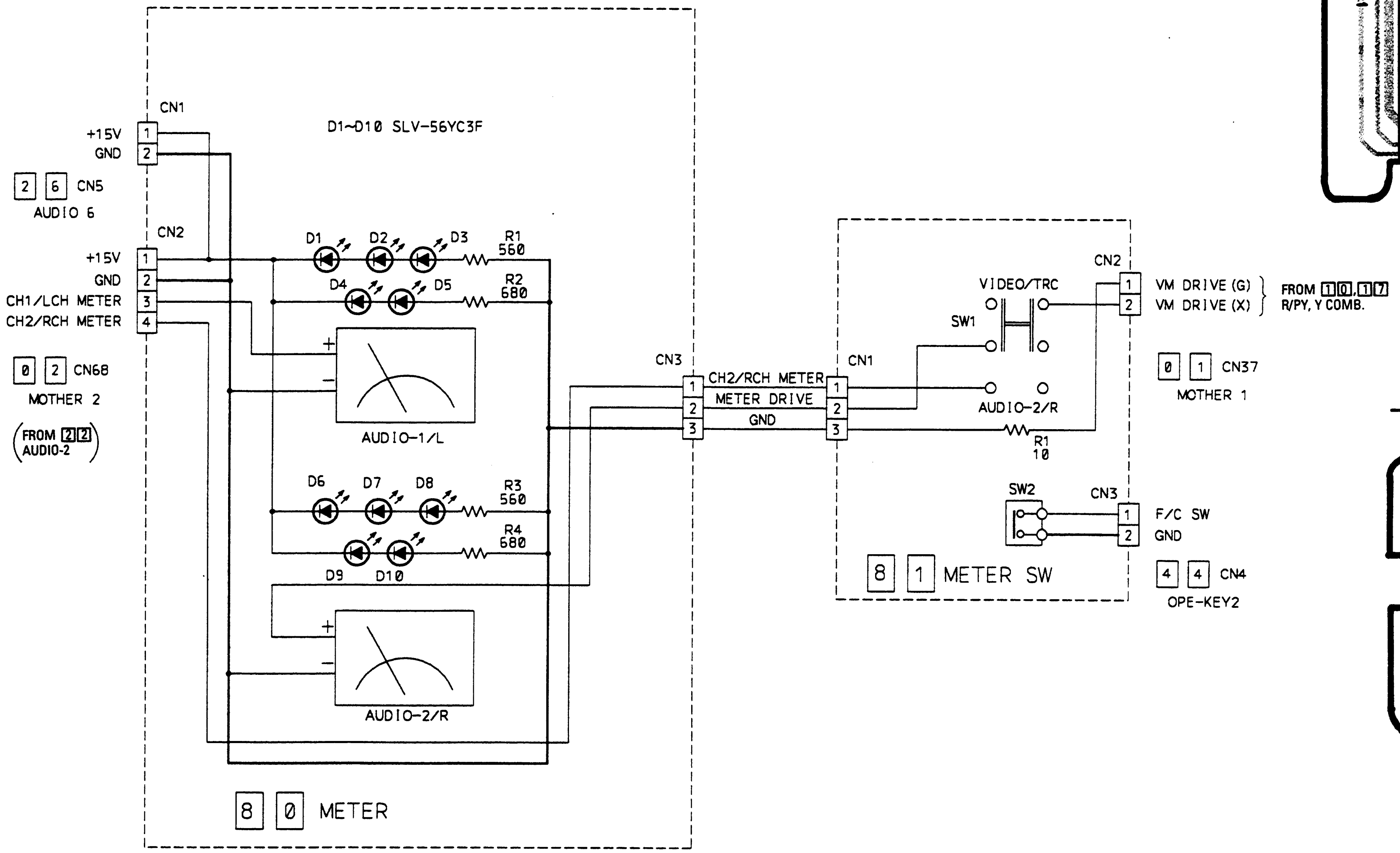
CN1
+15V
GND
1
2
D1~D10 SLV-56YC3F
2 6 CN5
AUDIO 6
CN2
+15V
GND
CH1/LCH METER
CH2/RCH METER
1
2
3
4
0 2 CN68
MOTHER 2
FROM 22
AUDIO-2
D1
D2
D3
R1
560
D4
D5
R2
680
+
−
AUDIO-1/L
D6
D7
D8
R3
560
R4
680
D9
D10
+
−
AUDIO-2/R
8 0 METER
CN3
1
2
3
CH2/RCH METER
METER DRIVE
GND
CN1
1
2
3
VIDEO/TRC
SW1
AUDIO-2/R
R1
10
CN2
1
2
VM DRIVE (G)
VM DRIVE (X)
FROM 10,17
R/PY, Y COMB.
0 1 CN37
MOTHER 1
SW2
CN3
1
2
F/C SW
GND
4 4 CN4
OPE-KEY2
8 1 METER SW

4.67 METER CIRCUIT BOARD

— METER —

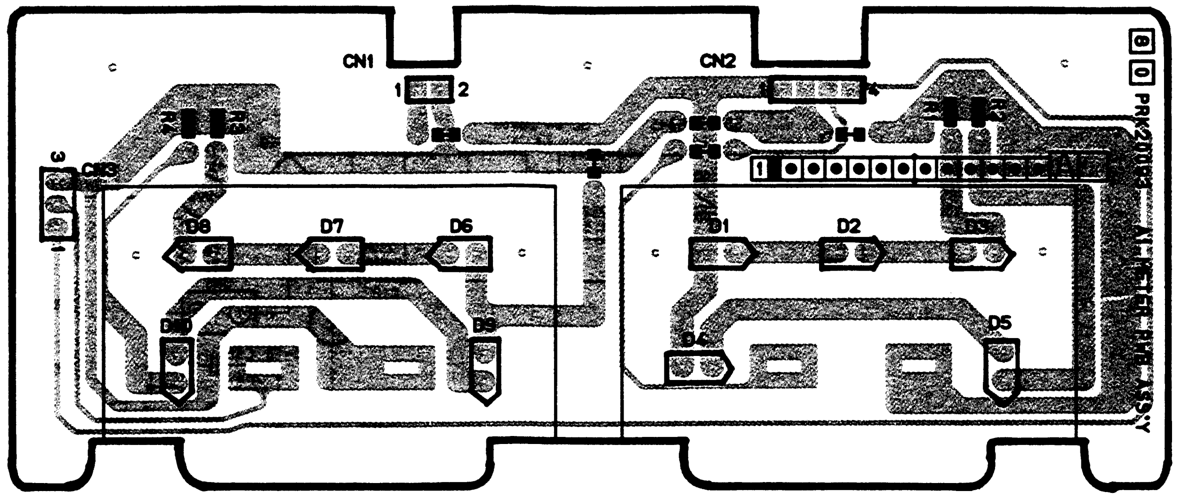
CN1
1
2
CN2
1
4
CN3
3
1
R4
R3
R1
R2
D8
D7
D6
D1
D2
D3
D10
D9
D4
D5
80
PRK20093 A1 METER PWB ASS'Y

— METER SWITCH —

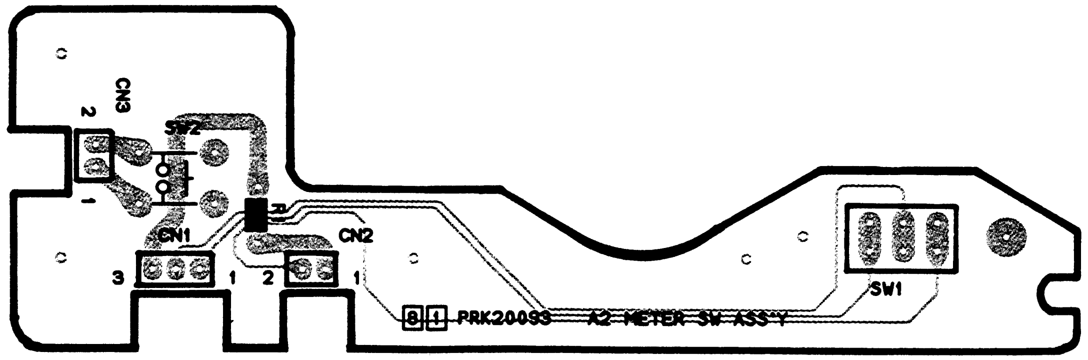
CN3
2
1
SW2
CN1
3
1
2
CN2
1
SW1
81 PRK20093 A2 METER SW ASS'Y

— TRACKING VR —

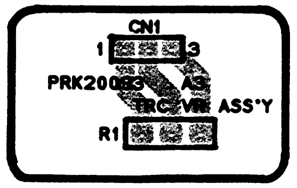
CN1
1
3
PRK20093 A3
TRC VR ASS'Y
R1

4.68 SWITCHING REGULATOR SCHEMATIC DIAGRAM (When something is wrong with this circuit, replace it with a new assembly part because this circuit is beyond repair service)

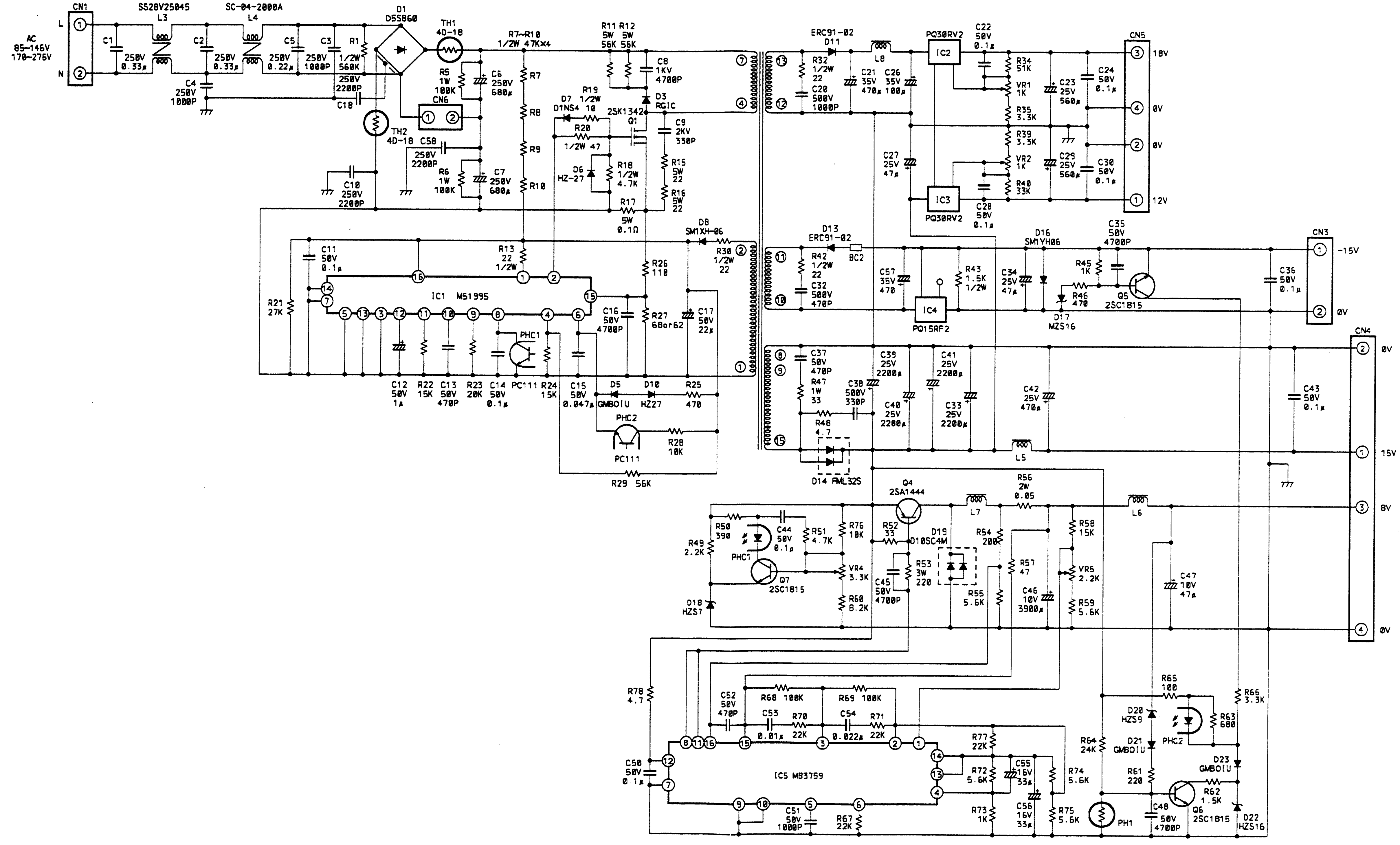
6
5
4
3
2
1
CN1
L
N
AC
85~146V
170~276V
C1
250V
0.33μ
SS28V25045
L3
C2
250V
0.33μ
SC-04-2000A
L4
C5
250V
0.22μ
C3
250V
1000P
R1
1/2W
560K
C4
250V
1000P
250V
2200P
C18
D1
D5SB60
TH1
4D-18
TH2
4D-18
R5
1W
100K
C6
250V
680μ
CN6
C58
250V
2200P
R6
1W
100K
C7
250V
680μ
C10
250V
2200P
R7~R10
1/2W 47K×4
R7
R8
R9
R10
R11 R12
5W 5W
56K 56K
C8
1KV
4700P
D3
RGIC
R19
D7 1/2W
D1NS4 10
2SK1342
Q1
R20
1/2W 47
C9
2KV
330P
D6
HZ-27
R18
1/2W
4.7K
R15
5W
22
R16
5W
22
R17
5W
0.1Ω
D8
SM1XH-06
R30
1/2W
22
C11
50V
0.1μ
R13
22
1/2W
R26
110
IC1 M51995
R21
27K
C16
50V
4700P
R27
680r62
C17
50V
22μ
PHC1
C12
50V
1μ
R22
15K
C13
50V
470P
R23
20K
C14
50V
0.1μ
PC111
R24
15K
C15
50V
0.047μ
D5
GMB01U
D10
HZ27
R25
470
PHC2
PC111
R28
10K
R29 56K
ERC91-02
D11
R32
1/2W
22
C20
500V
1000P
L8
C21
35V
470μ
C26
35V
100μ
PQ30RV2
IC2
C22
50V
0.1μ
R34
51K
VR1
1K
R35
3.3K
R39
3.3K
VR2
1K
R40
33K
C23
25V
560μ
C24
50V
0.1μ
C29
25V
560μ
C30
50V
0.1μ
C27
25V
47μ
IC3
PQ30RV2
C28
50V
0.1μ
CN5
18V
0V
0V
12V
D13
ERC91-02
R42
1/2W
22
BC2
C32
500V
470P
C57
35V
470
R43
1.5K
1/2W
IC4
PQ15RF2
C34
25V
47μ
D16
SM1YH06
C35
50V
4700P
R45
1K
R46
470
D17
MZS16
Q5
2SC1815
C36
50V
0.1μ
CN3
-15V
0V
CN4
0V
C37
50V
470P
R47
1W
33
C38
500V
330P
R48
4.7
C39
25V
2200μ
C40
25V
2200μ
C41
25V
2200μ
C33
25V
2200μ
C42
25V
470μ
C43
50V
0.1μ
L5
15V
D14 FML32S
Q4
2SA1444
L7
R56
2W
0.05
L6
8V
R50
390
C44
50V
0.1μ
R51
4.7K
R76
10K
R52
33
D19
D10SC4M
R54
200
R58
15K
R49
2.2K
PHC1
Q7
2SC1815
VR4
3.3K
R60
8.2K
C45
50V
4700P
R53
3W
220
R55
5.6K
R57
47
VR5
2.2K
C46
10V
3900μ
R59
5.6K
C47
10V
47μ
D18
HZS7
0V
R78
4.7
C52
50V
470P
R68 100K
R69 100K
C53
0.01μ
R70
22K
C54
0.022μ
R71
22K
R77
22K
C55
16V
33μ
R72
5.6K
R74
5.6K
C50
50V
0.1μ
IC5 MB3759
C51
50V
1000P
R67
22K
R73
1K
C56
16V
33μ
R75
5.6K
PH1
R65
100
D20
HZS9
PHC2
R63
680
R66
3.3K
R64
24K
D21
GMB01U
D23
GMB01U
R61
220
R62
1.5K
C48
50V
4700P
Q6
2SC1815
D22
HZS16
A
B
E
F
G
H

4.69 IC BLOCK DIAGRAM

— AN607P —

Wide Band Amplifier Circuit

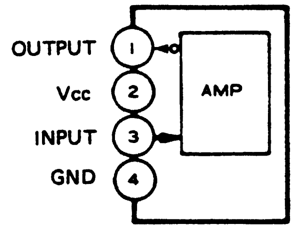
OUTPUT
Vcc
INPUT
GND
AMP

— AN608P —

Wide Band Amplifier Circuit

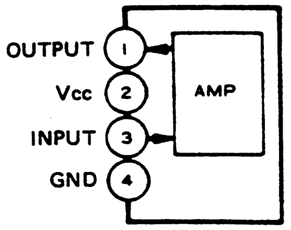
OUTPUT
Vcc
INPUT
GND
AMP

— AN1082S —

Dual Operation Amplifier

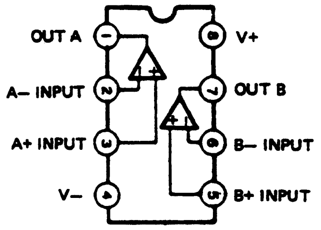
OUT A
A– INPUT
A+ INPUT
V–
V+
OUT B
B– INPUT
B+ INPUT

— AN3296 —

Sync sepa. & AFC circuit

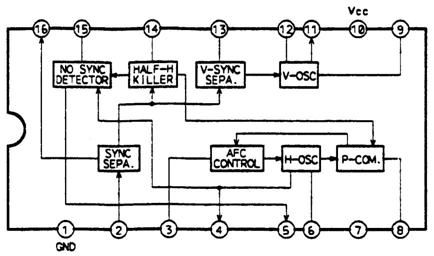
Vcc
NO SYNC DETECTOR
HALF-H KILLER
V-SYNC SEPA.
V-OSC
SYNC SEPA.
AFC CONTROL
H-OSC
P-COM.
GND

— AN3370K —

Flyng Erase

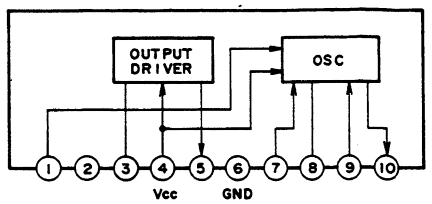
OUTPUT DRIVER
OSC
Vcc
GND

— AN3398 —

S-VHS Detector

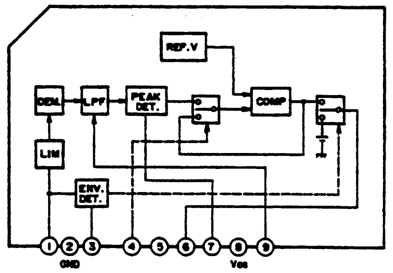
REF.V
DEM.
LPF
PEAK DET.
COMP
LIM
ENV. DET.
GND
Vcc

— AM3480K —

C.T.C. And Y/C Separator

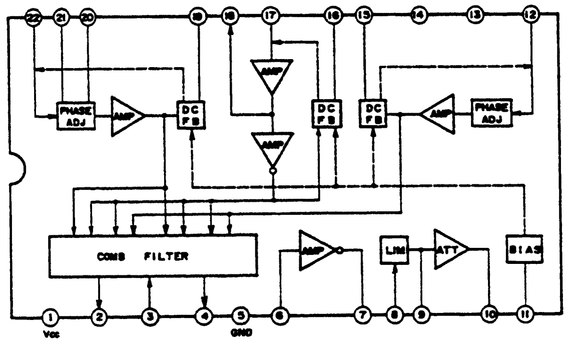
PHASE ADJ
AMP
DC FB
AMP
AMP
DC FB
DC FB
AMP
PHASE ADJ
COMB FILTER
LIM
ATT
BIAS
Vcc
GND

— AN3834K —

Reel Motor Driver

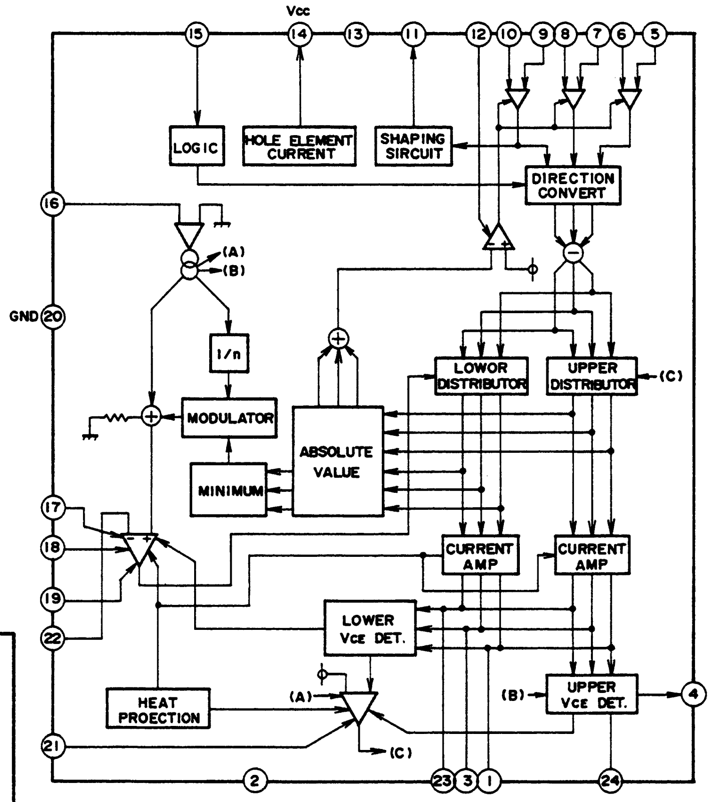
Vcc
LOGIC
HOLE ELEMENT CURRENT
SHAPING SIRCUIT
DIRECTION CONVERT
(A)
(B)
I/n
MODULATOR
MINIMUM
ABSOLUTE VALUE
LOWOR DISTRIBUTOR
UPPER DISTRIBUTOR
(C)
CURRENT AMP
CURRENT AMP
LOWER VCE DET.
UPPER VCE DET.
HEAT PROECTION
(A)
(B)
(C)
GND

— AN3916 —

AGC

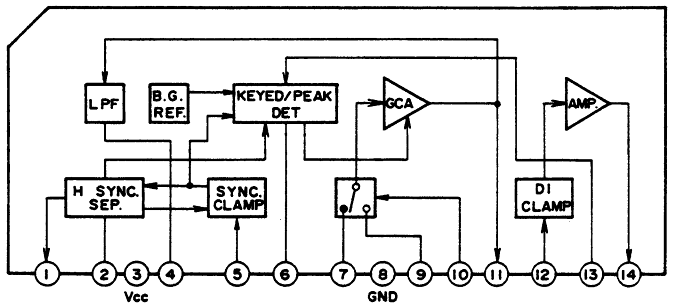
LPF
B.G. REF.
KEYED/PEAK DET
GCA
AMP
H SYNC. SEP.
SYNC. CLAMP
DI CLAMP
Vcc
GND

— AN3920S —

RF Amplifier Circuit for FM Audio

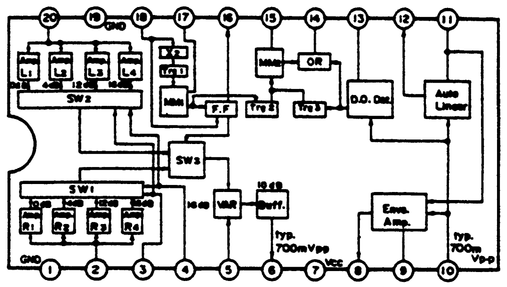
GND
SW2
OR
D.O. Det.
Auto Linear
F.F
SW3
SW1
VAR
Buff.
Enve. Amp.
typ. 700mVpp
Vcc
typ. 700m Vp-p
GND

[Terminal Description]

Pin No.	Description	Pin No.	Description
1	GND	11	Auto Linear Detection Terminal
2	RF (R-ch) Input Terminal	12	Linear High Output Terminal
3	6H High Input Terminal	13	D.0. Detection Terminal
4	+12dB High Input Terminal	14	S/H Output Terminal
5	Variable Amplifier Control Terminal	15	M.M. 2
6	RF Output Terminal	16	A.H. SW Output Terminal
7	Vcc	17	M.M. 1
8	Enve Output Terminal	18	H. SW Input Terminal
9	Enve Detection Terminal	19	GND
10	RF Input Terminal	20	RF (L-ch) Input Terminal

— AN3922NS —

FM Audio Signal Processing Circuit

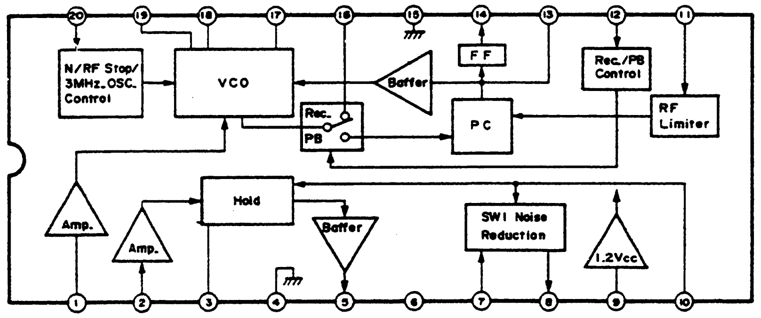
N/RF Stop/ 3MHz.OSC. Control
VCO
Buffer
F F
Rec./PB Control
RF Limiter
Rec.
PB
PC
Amp.
Amp.
Hold
Buffer
SWI Noise Reduction
1.2Vcc

[Terminal Description]

Pin No.	Description	Pin No.	Description
1	Audio Signal Input on Rec. Mode	11	RF Signal Input on PB Mode
2	Hold Amp. Input Terminal	12	Rec./PB Control
3	Hold Control	13	FM Demodulation Control
4	GND (Audio)	14	FM Demodulation Output
5	Hold Output Terminal	15	GND (RF)
6	Vcc	16	FM Modulation Output
7	Switchig Noise Reduction Input Terminal	17	VCO Frequency Adjustment
8	Switching Noise Reduction Output Terminal	18	VCO Capacitance
9	1/2 Vcc	19	VCO Capacitance
10	Hold Pulse Input Terminal	20	VCO Oscillation Control

— 8VT15 —

Driver

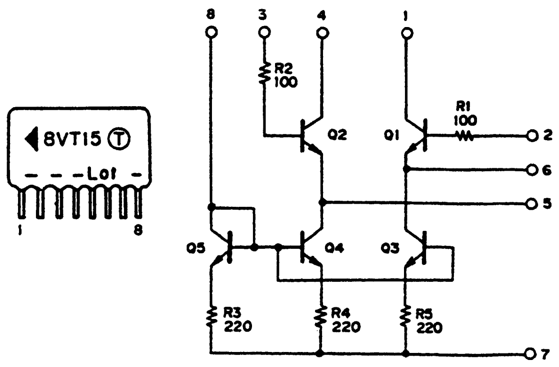
8VT15
- - - Lot -
1
8
8
3
4
1
R2 100
Q2
Q1
R1 100
2
6
5
Q5
Q4
Q3
R3 220
R4 220
R5 220
7

— AN3931NC-A —

Stereo Audio REC/PB Circuit

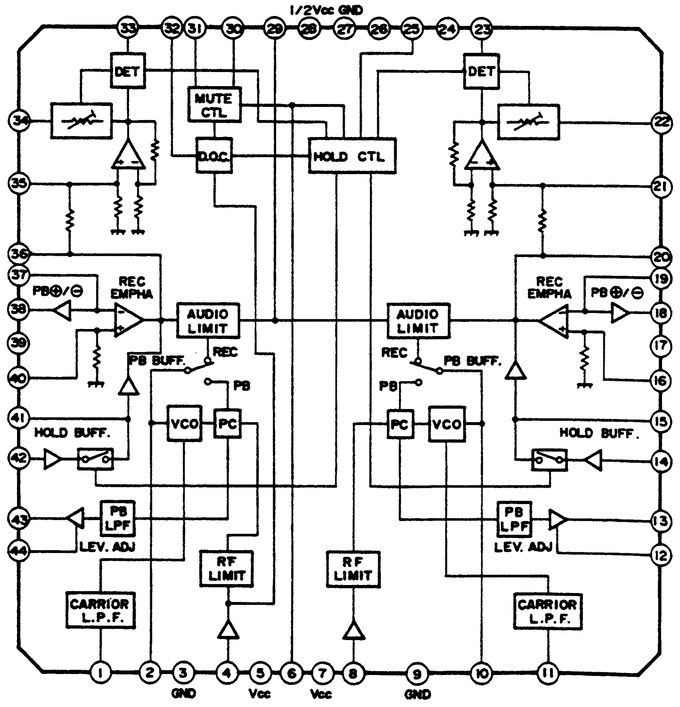
1/2Vcc GND
DET
MUTE CTL
DET
D.O.C.
HOLD CTL
REC EMPHA
PB⊕/⊖
AUDIO LIMIT
AUDIO LIMIT
REC EMPHA
PB⊕/⊖
PB BUFF.
REC
PB
HOLD BUFF.
VCO
PC
PC
VCO
HOLD BUFF.
PB LPF
LEV. ADJ
PB LPF
LEV. ADJ
RF LIMIT
RF LIMIT
CARRIOR L.P.F.
CARRIOR L.P.F.
GND
Vcc
Vcc
GND

— AN6041 —

Dual Balanced Modulator For Video Cameras

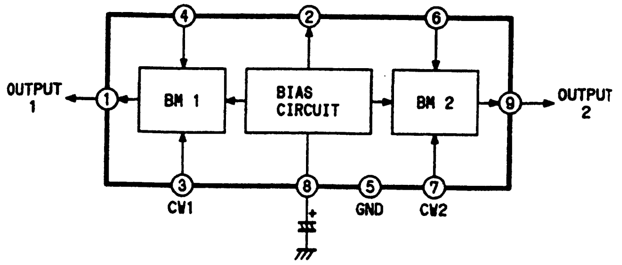
LF SIGNAL1
VCC
LF SIGNAL 2
OUTPUT 1
BM 1
BIAS CIRCUIT
BM 2
OUTPUT 2
CW1
GND
CW2

— AN6298NS —

Peak-Noise-Reduction System for Hi-Fi VHS VRTs

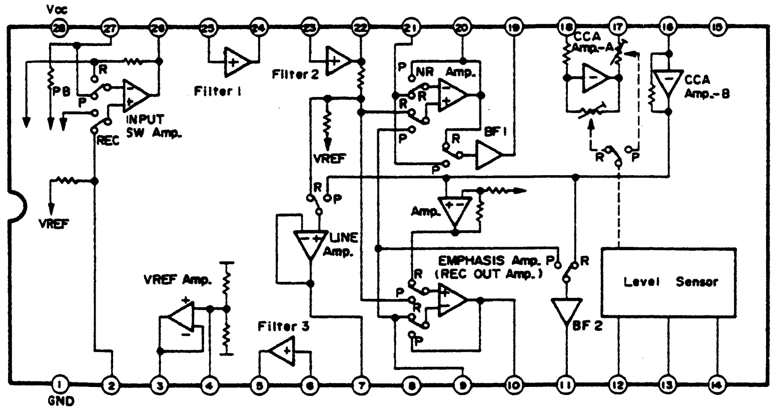
Vcc
28
27
26
25
24
23
22
21
20
19
18
17
16
15
PB
R
P
REC
INPUT
SW Amp.
Filter I
Filter 2
VREF
P
NR Amp.
R
BF I
CCA
Amp.-A
CCA
Amp.-B
LINE
Amp.
Amp.
EMPHASIS Amp.
(REC OUT Amp.)
Level Sensor
VREF Amp.
Filter 3
BF 2
1
GND
2
3
4
5
6
7
8
9
10
11
12
13
14

[Terminal Description]

Pin No.	Description	Pin No.	Description
1	GND	15	Encode Decode SW
2	Encode Input	16	CCA Amp. Input
3	Reference Voltage-1	17	CCA Gain Cell Output
4	Reference Voltage-2	18	CCA Gain Cell Input
5	Filter Amp. 3 Output	19	BF Amp. 1 Output
6	Filter Amp. 3 Input	20	NR-Emphasis-Amp. Output
7	Line Output	21	NR-Emphasis
8	Rec. Mute SW	22	Filter Amp. 2 Output
9	Output Emphasis	23	Filter Amp. 2 Input
10	Encode Output	24	Filter Amp. 1 Output
11	BF Amp. 2 Output	25	Filter Amp. 1 Input
12	Level Sensor Input	26	Input SW-Amp. Output
13	Timing Condensor	27	Decode Input
14	Recovery	28	Vcc

— AN6306S —

VTR Recording Video Signal Processing Circuit

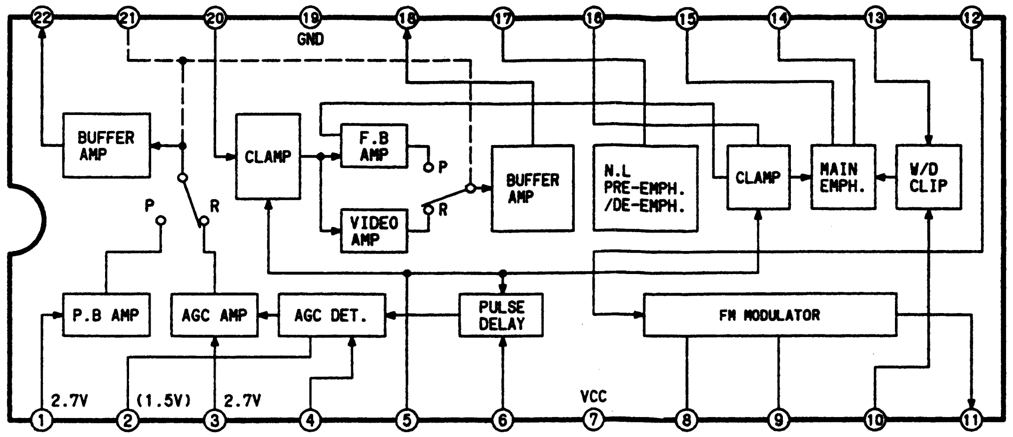
22
21
20
19
GND
18
17
16
15
14
13
12
BUFFER AMP
CLAMP
F.B AMP
P
R
VIDEO AMP
BUFFER AMP
N.L PRE-EMPH. /DE-EMPH.
CLAMP
MAIN EMPH.
W/D CLIP
P.B AMP
AGC AMP
AGC DET.
PULSE DELAY
FM MODULATOR
2.7V
(1.5V)
2.7V
VCC
1
2
3
4
5
6
7
8
9
10
11

— AN6308S —

Analog Switch

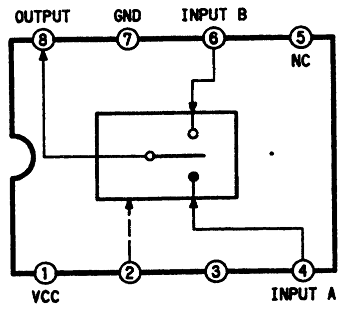
OUTPUT
GND
INPUT B
8
7
6
5
NC
1
2
3
4
VCC
INPUT A

— AN6393 —

VTR Luminance Signal Processing Circuit

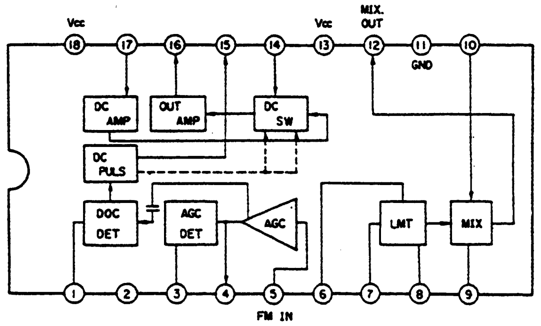
Vcc
Vcc
MIX. OUT
18
17
16
15
14
13
12
11
10
GND
DC AMP
OUT AMP
DC SW
DC PULS
DOC DET
AGC DET
AGC
LMT
MIX
1
2
3
4
5
6
7
8
9
FM IN

— AN6366N —

Color ACC

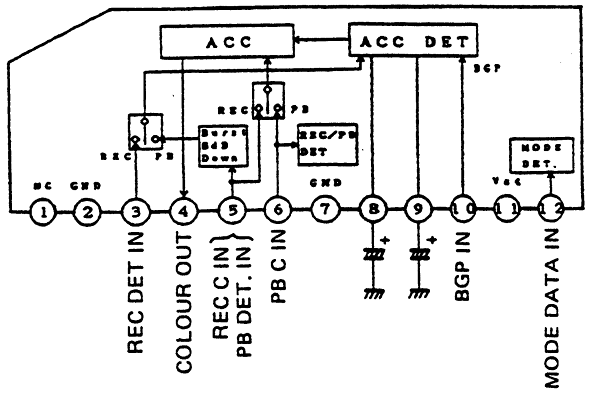
ACC
ACC DET
BGP
REC
PB
Burst 6dB Down
REC/PB DET
MODE DET.
NC
GND
GND
Vcc
1
2
3
4
5
6
7
8
9
10
11
12
REC DET IN
COLOUR OUT
REC C IN
PB DET. IN
PB C IN
BGP IN
MODE DATA IN

MODE DATA	ACC		BURST 6 dB DOWN	
	REC	PB	REC	PB
H : EP	C ACC	BURST ACC	—	ON
C : LP	BURST ACC			OFF
L : SP	C ACC			ON

— AN6394 —

VTR Audio REC/PB Circuit

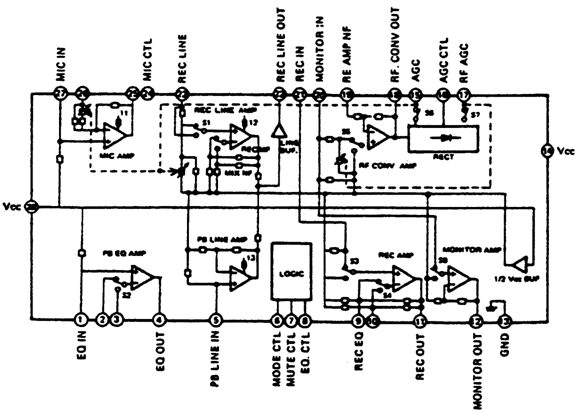
MIC IN
MIC CTL
REC LINE
REC LINE OUT
REC IN
MONITOR IN
RE AMP NF
RF. CONV OUT
AGC
AGC CTL
RF AGC
27
26
25
24
22
22
21
20
19
18
15
16
17
MIC AMP
REC LINE AMP
S1
REC AMP
MIX NF
LINE BUF.
S5
S6
S7
RF CONV AMP
RECT
14
Vcc
1/2 Vcc
PB EQ AMP
S2
PB LINE AMP
LOGIC
REC AMP
S3
S4
MONITOR AMP
S8
1/2 Vcc BUF
1
2
3
4
5
6
7
8
9
10
11
12
13
EQ IN
EQ OUT
PB LINE IN
MODE CTL
MUTE CTL
EQ. CTL
REC EQ
REC OUT
MONITOR OUT
GND

— BA222 —

Monolithic Timer

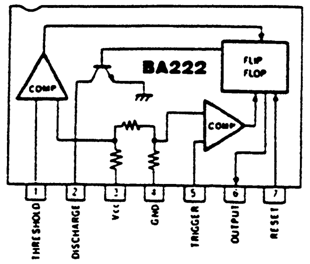
COMP
BA222
FLIP FLOP
COMP
1
2
3
4
5
6
7
THRESHOLD
DISCHARGE
Vcc
GND
TRIGGER
OUTPUT
RESET

— BA10324F —

Quad Ground Operational Amplfiers

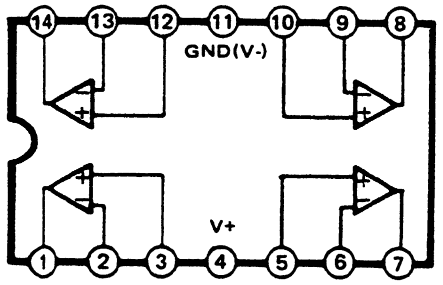
14
13
12
11
10
9
8
GND(V-)
V+
1
2
3
4
5
6
7

— BA10358F —

Reference

BA6993F

— BA10393F —

Reference

BA6993F

— BA4558F —

Reference

AN1082S

— BA6993F —

Dual Operational Amplifier

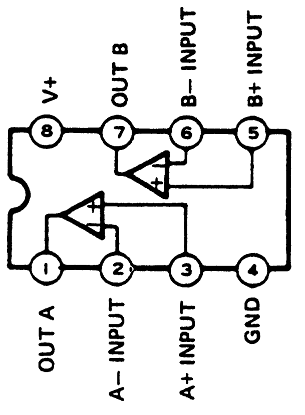
V+
OUT B
B– INPUT
B+ INPUT
8
7
6
5
1
2
3
4
OUT A
A– INPUT
A+ INPUT
GND

— BA7233 —

VTR Chroma Sub Signal Processing Circuit

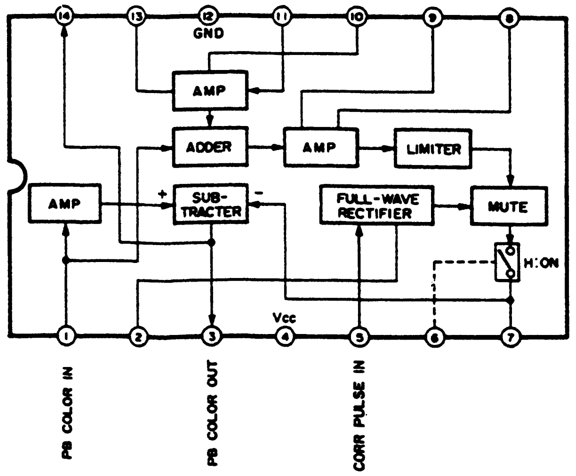
14
13
12
GND
11
10
9
8
AMP
ADDER
AMP
LIMITER
AMP
SUB-TRACTER
+
–
FULL-WAVE RECTIFIER
MUTE
H:ON
Vcc
1
2
3
4
5
6
7
PB COLOR IN
PB COLOR OUT
CORR PULSE IN

— CXD1176Q —

A/D Converter

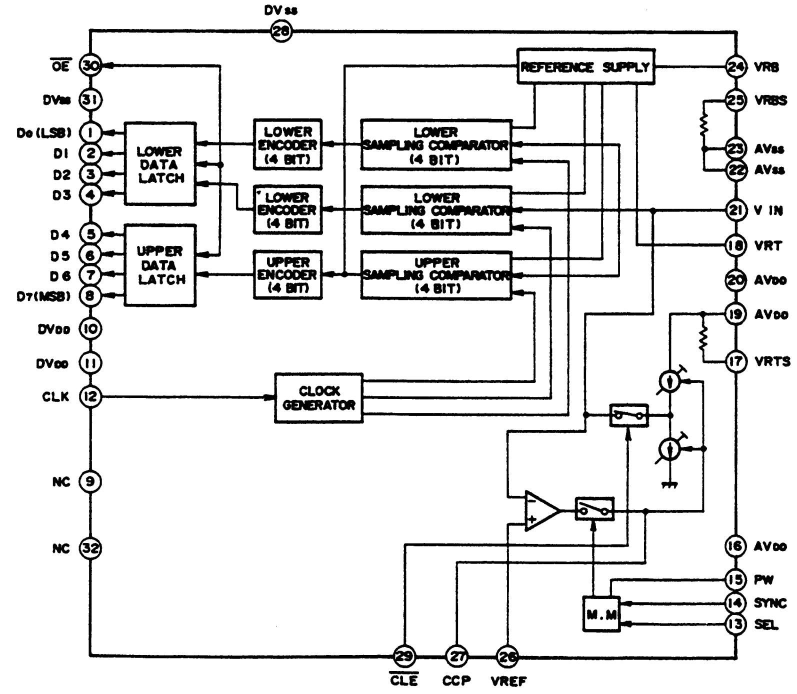
DVss
28
OE
30
DVss
31
D0 (LSB)
1
D1
2
D2
3
D3
4
D4
5
D5
6
D6
7
D7(MSB)
8
DVDD
10
DVDD
11
CLK
12
NC
9
NC
32
LOWER DATA LATCH
UPPER DATA LATCH
LOWER ENCODER (4 BIT)
LOWER ENCODER (4 BIT)
UPPER ENCODER (4 BIT)
LOWER SAMPLING COMPARATOR (4 BIT)
LOWER SAMPLING COMPARATOR (4 BIT)
UPPER SAMPLING COMPARATOR (4 BIT)
REFERENCE SUPPLY
CLOCK GENERATOR
M.M
24
VRB
25
VRBS
23
AVss
22
AVss
21
V IN
18
VRT
20
AVDD
19
AVDD
17
VRTS
16
AVDD
15
PW
14
SYNC
13
SEL
29
CLE
27
CCP
26
VREF

— CXP80116-706Q —

CMOS 8 Bit Micro Computer

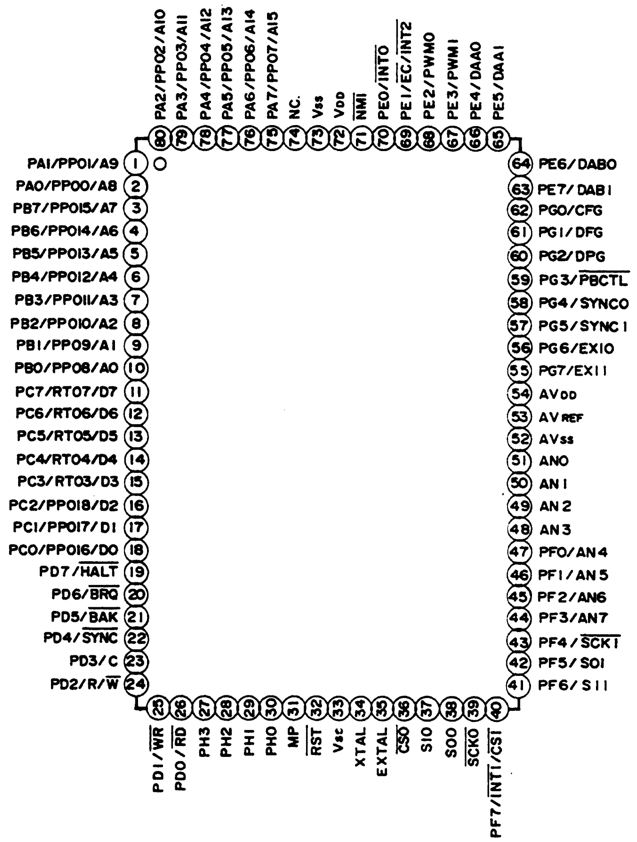
PAI/PPOI/A9 1
PA0/PP00/A8 2
PB7/PP015/A7 3
PB6/PP014/A6 4
PB5/PP013/A5 5
PB4/PP012/A4 6
PB3/PP011/A3 7
PB2/PP010/A2 8
PB1/PP09/A1 9
PB0/PP08/A0 10
PC7/RT07/D7 11
PC6/RT06/D6 12
PC5/RT05/D5 13
PC4/RT04/D4 14
PC3/RT03/D3 15
PC2/PP018/D2 16
PC1/PP017/D1 17
PC0/PP016/D0 18
PD7/HALT 19
PD6/BRQ 20
PD5/BAK 21
PD4/SYNC 22
PD3/C 23
PD2/R/W 24
PD1/WR 25
PD0/RD 26
PH3 27
PH2 28
PH1 29
PH0 30
MP 31
RST 32
Vss 33
XTAL 34
EXTAL 35
CS0 36
SI0 37
SO0 38
SCK0 39
PF7/INT1/CS1 40
PF6/SI1 41
PF5/SO1 42
PF4/SCK1 43
PF3/AN7 44
PF2/AN6 45
PF1/AN5 46
PF0/AN4 47
AN3 48
AN2 49
AN1 50
AN0 51
AVss 52
AVREF 53
AVDD 54
PG7/EXI1 55
PG6/EXI0 56
PG5/SYNC1 57
PG4/SYNCO 58
PG3/PBCTL 59
PG2/DPG 60
PG1/DFG 61
PG0/CFG 62
PE7/DAB1 63
PE6/DAB0 64
PE5/DAA1 65
PE4/DAA0 66
PE3/PWM1 67
PE2/PWM0 68
PE1/EC/INT2 69
PE0/INT0 70
NMI 71
VDD 72
Vss 73
NC 74
PA7/PP07/A15 75
PA6/PP06/A14 76
PA5/PP05/A13 77
PA4/PP04/A12 78
PA3/PP03/A11 79
PA2/PP02/A10 80

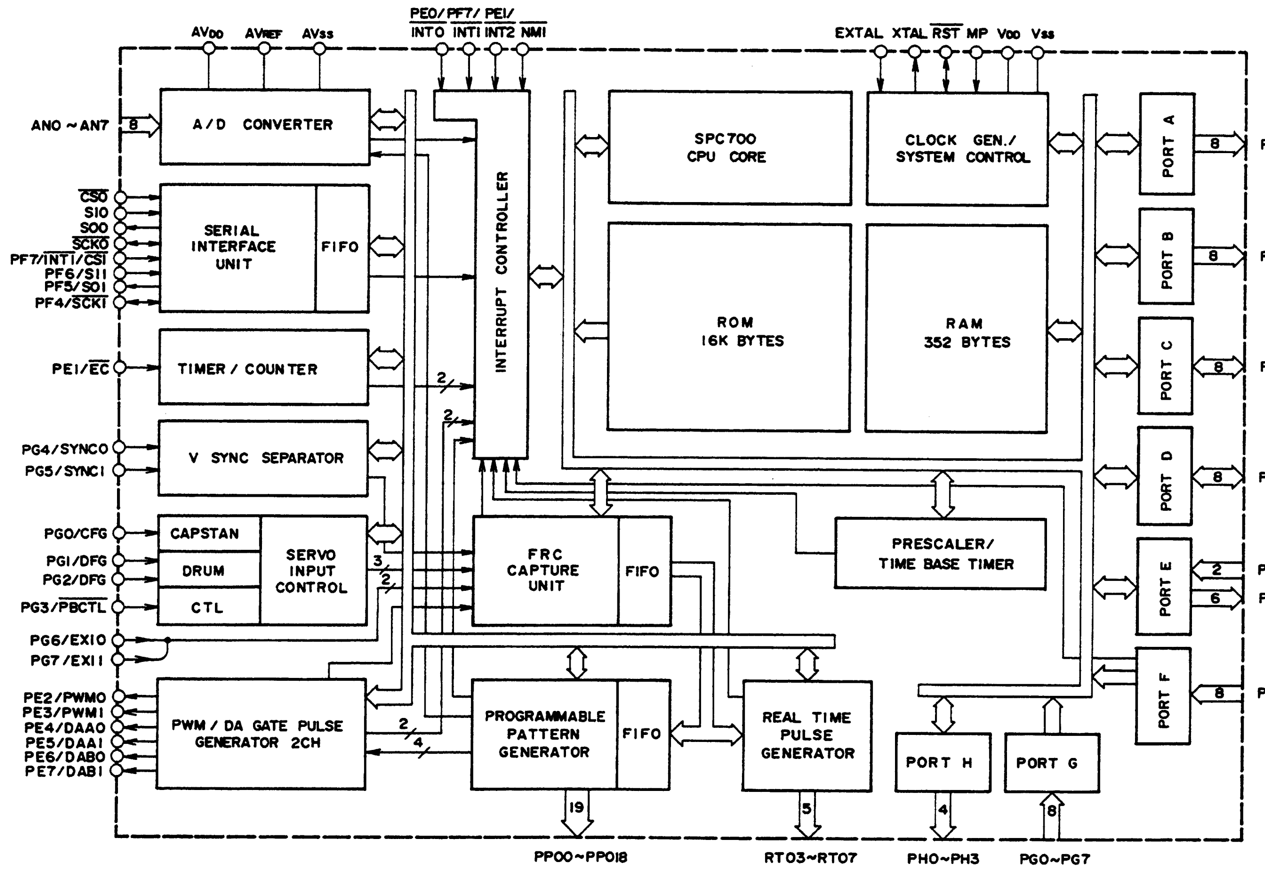
AVDD AVREF AVss
PE0/PF7/PE1/
INT0 INT1 INT2 NMI
EXTAL XTAL RST MP VDD Vss
AN0~AN7
8
A/D CONVERTER
CS0
SI0
SO0
SCK0
PF7/INT1/CS1
PF6/SI1
PF5/SO1
PF4/SCK1
SERIAL INTERFACE UNIT
FIFO
PE1/EC
TIMER / COUNTER
PG4/SYNCO
PG5/SYNC1
V SYNC SEPARATOR
PG0/CFG
PG1/DFG
PG2/DFG
PG3/PBCTL
CAPSTAN
DRUM
CTL
SERVO INPUT CONTROL
3
2
PG6/EXI0
PG7/EXI1
PE2/PWM0
PE3/PWM1
PE4/DAA0
PE5/DAA1
PE6/DAB0
PE7/DAB1
PWM / DA GATE PULSE GENERATOR 2CH
2
4
INTERRUPT CONTROLLER
SPC700 CPU CORE
CLOCK GEN./ SYSTEM CONTROL
ROM 16K BYTES
RAM 352 BYTES
FRC CAPTURE UNIT
FIFO
PRESCALER/ TIME BASE TIMER
PROGRAMMABLE PATTERN GENERATOR
FIFO
REAL TIME PULSE GENERATOR
PORT H
PORT G
19
5
4
8
PP00~PP018
RT03~RT07
PH0~PH3
PG0~PG7
PORT A
8
PA0~PA7
PORT B
8
PB0~PB7
PORT C
8
PC0~PC7
PORT D
8
PD0~PD7
PORT E
2
6
PE0~PE1
PE2~PE7
PORT F
8
PF0~PF7

— HD64180ZF8 —

8 Bit CMOS Microprocessor

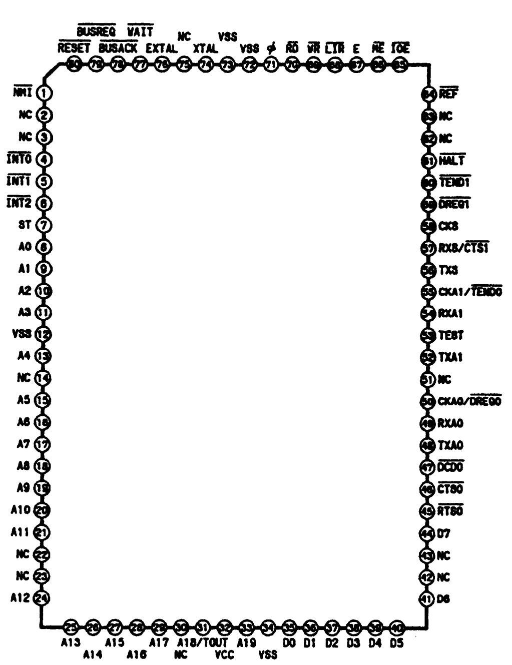
NMI 1
NC 2
NC 3
INT0 4
INT1 5
INT2 6
ST 7
A0 8
A1 9
A2 10
A3 11
VSS 12
A4 13
NC 14
A5 15
A6 16
A7 17
A8 18
A9 19
A10 20
A11 21
NC 22
NC 23
A12 24
A13 25
A14 26
A15 27
A16 28
A17 29
NC 30
A18/TOUT 31
VCC 32
A19 33
VSS 34
D0 35
D1 36
D2 37
D3 38
D4 39
D5 40
D6 41
NC 42
NC 43
D7 44
RTS0 45
CTS0 46
DCD0 47
TXA0 48
RXA0 49
CKA0/DREQ0 50
NC 51
TXA1 52
TEST 53
RXA1 54
CKA1/TEND0 55
TXS 56
RXS/CTS1 57
CKS 58
DREQ1 59
TEND1 60
HALT 61
NC 62
NC 63
REF 64
IOE 65
ME 66
E 67
LIR 68
WR 69
RD 70
φ 71
VSS 72
XTAL 73
NC 74
EXTAL 75
WAIT 76
BUSACK 77
BUSREQ 78
RESET 79

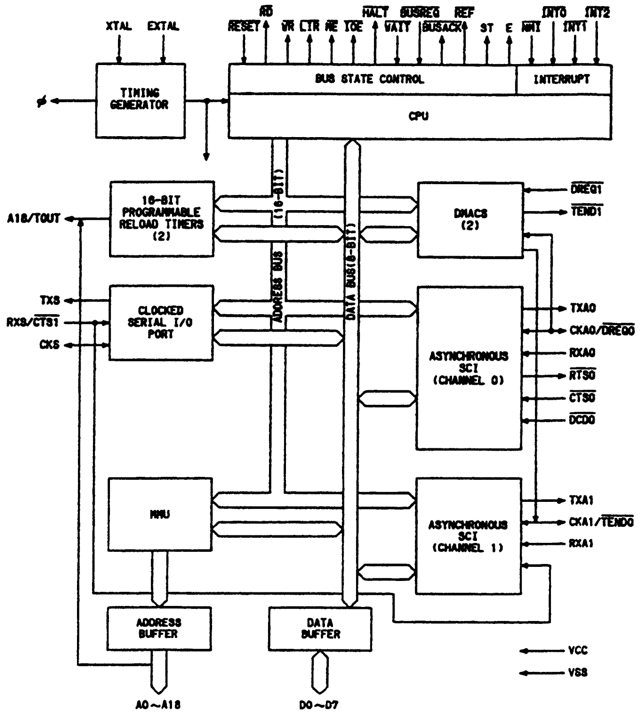
XTAL
EXTAL
TIMING GENERATOR
φ
RESET
RD
WR
LIR
ME
IOE
HALT
WAIT
BUSREQ
BUSACK
REF
ST
E
NMI
INT0
INT1
INT2
BUS STATE CONTROL
INTERRUPT
CPU
16-BIT PROGRAMMABLE RELOAD TIMERS (2)
A18/TOUT
(16-BIT)
ADDRESS BUS
DATA BUS(8-BIT)
DMACS (2)
DREQ1
TEND1
CLOCKED SERIAL I/O PORT
TXS
RXS/CTS1
CKS
ASYNCHRONOUS SCI (CHANNEL 0)
TXA0
CKA0/DREQ0
RXA0
RTS0
CTS0
DCD0
MMU
ASYNCHRONOUS SCI (CHANNEL 1)
TXA1
CKA1/TEND0
RXA1
ADDRESS BUFFER
DATA BUFFER
A0~A18
D0~D7
VCC
VSS

— LA7213 —

Sync Separator

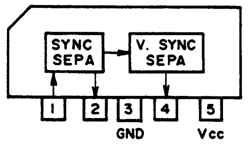
SYNC SEPA
V. SYNC SEPA
1
2
3
4
5
GND
Vcc

— LA7220 —

Electrical Switch

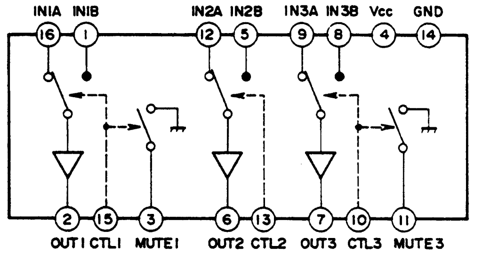
INIA
INIB
IN2A
IN2B
IN3A
IN3B
Vcc
GND
16
1
12
5
9
8
4
14
2
15
3
6
13
7
10
11
OUT1
CTL1
MUTE1
OUT2
CTL2
OUT3
CTL3
MUTE3

— LA7222 —

Dual 2 Input A/V Switch

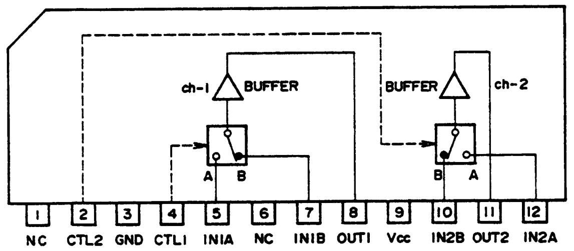
ch-1
BUFFER
BUFFER
ch-2
A
B
B
A
1
2
3
4
5
6
7
8
9
10
11
12
NC
CTL2
GND
CTL1
IN1A
NC
IN1B
OUT1
Vcc
IN2B
OUT2
IN2A

— LVA523SA —

Switch

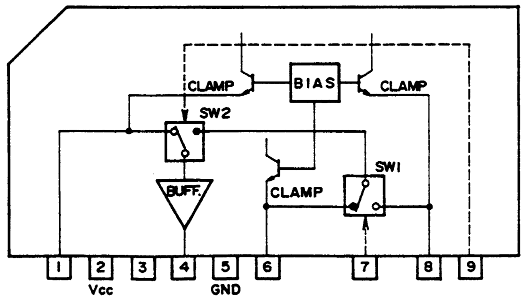
CLAMP
BIAS
CLAMP
SW2
BUFF.
CLAMP
SW1
1
2
3
4
5
6
7
8
9
Vcc
GND

— LM6361M/N —

Comparator

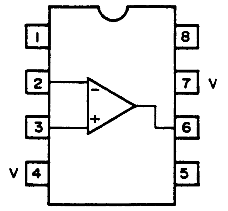
1
2
3
4
V
8
7
V
6
5
-
+

— MC10107 —

Triple 2-input Exclusive OR and Exclusive NOR

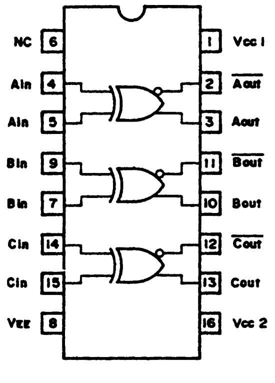
NC 6
Ain 4
Ain 5
Bin 9
Bin 7
Cin 14
Cin 15
VEE 8
1 Vcc 1
2 Aout
3 Aout
11 Bout
10 Bout
12 Cout
13 Cout
16 Vcc 2

— MC10116 —

Triple line Receiver

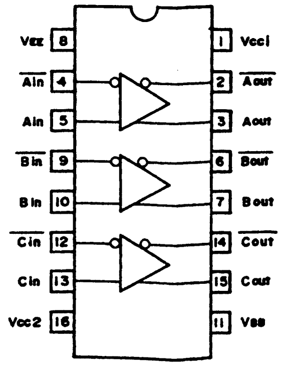
VEE 8
Ain 4
Ain 5
Bin 9
Bin 10
Cin 12
Cin 13
Vcc2 16
1 Vcc1
2 Aout
3 Aout
6 Bout
7 Bout
14 Cout
15 Cout
11 VBB

— MC34051P —

Dual RS-422/423 Transceiver

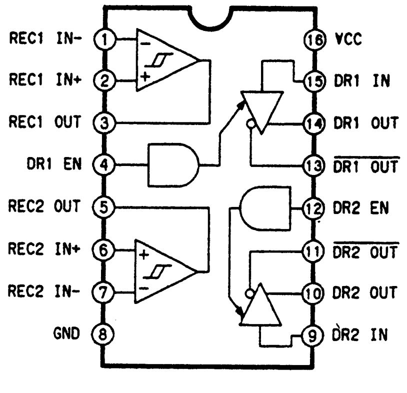
REC1 IN- 1
REC1 IN+ 2
REC1 OUT 3
DR1 EN 4
REC2 OUT 5
REC2 IN+ 6
REC2 IN- 7
GND 8
16 VCC
15 DR1 IN
14 DR1 OUT
13 DR1 OUT
12 DR2 EN
11 DR2 OUT
10 DR2 OUT
9 DR2 IN

— M50253P —

12 Bit Serial Data/Parallel converted IC

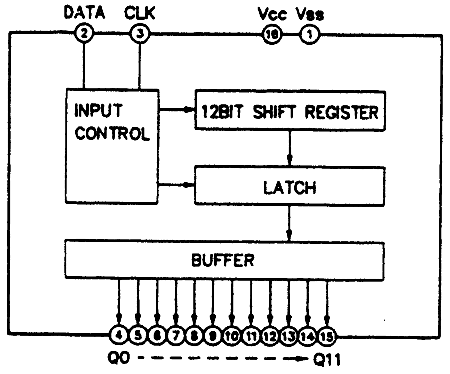
DATA
CLK
Vcc
Vss
INPUT CONTROL
12BIT SHIFT REGISTER
LATCH
BUFFER
Q0
Q11

— M50255P —

16 Bit Serial Data/Parallel Converted IC

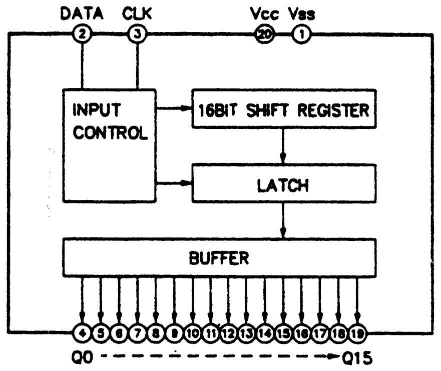
DATA
CLK
Vcc
Vss
INPUT CONTROL
16BIT SHIFT REGISTER
LATCH
BUFFER
Q0
Q15

— M50554-263SP —

Character Generator

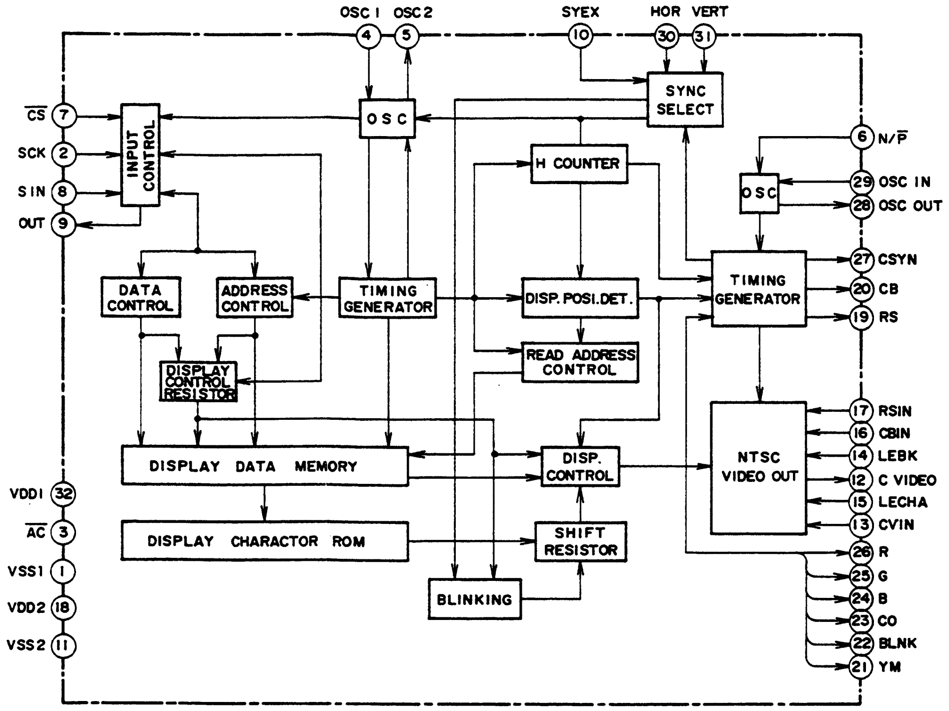
OSC 1
OSC 2
SYEX
HOR
VERT
CS
SCK
SIN
OUT
INPUT CONTROL
OSC
SYNC SELECT
N/P
H COUNTER
OSC IN
OSC OUT
DATA CONTROL
ADDRESS CONTROL
TIMING GENERATOR
DISP. POSI. DET.
TIMING GENERATOR
CSYN
CB
RS
READ ADDRESS CONTROL
DISPLAY CONTROL RESISTOR
RSIN
CBIN
LEBK
C VIDEO
LECHA
CVIN
DISPLAY DATA MEMORY
DISP. CONTROL
NTSC VIDEO OUT
VDD1
AC
DISPLAY CHARACTOR ROM
SHIFT RESISTOR
R
G
B
CO
BLNK
YM
VSS1
VDD2
VSS2
BLINKING

— M51957BL —

Voltage Detector/System Reset

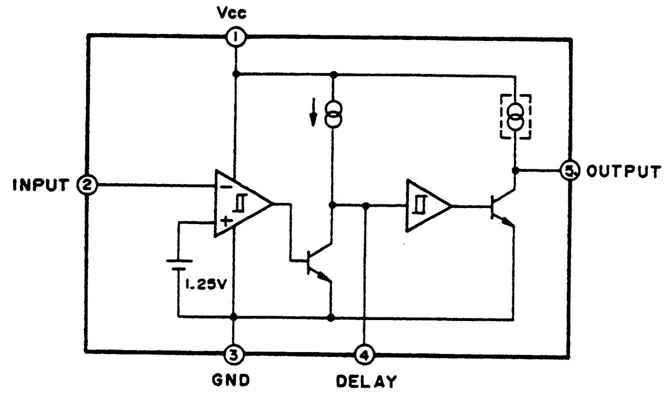
Vcc
INPUT
OUTPUT
1.25V
GND
DELAY

— M5201 —

2 Input Switch Opeamp

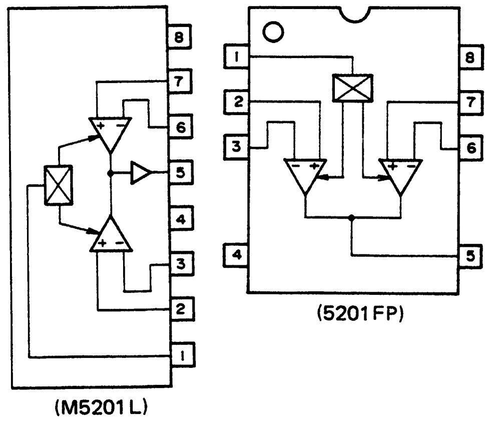
(5201FP)
(M5201L)

— M5216FP —

Reference
M5218FP

— M5218AL/AP —

Dual Opeamp

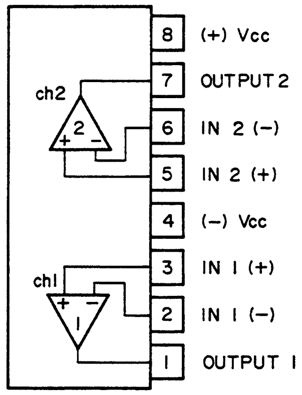
ch2
ch1
(+) Vcc
OUTPUT 2
IN 2 (−)
IN 2 (+)
(−) Vcc
IN 1 (+)
IN 1 (−)
OUTPUT 1

— M5218FP —

Dual Opeamp

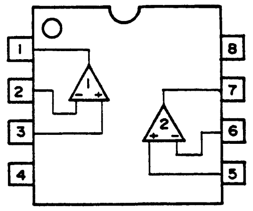

— M5220FP —

Reference
M5218FP

— M52684AP —

Sync sepa./H. AGC/H. VCO

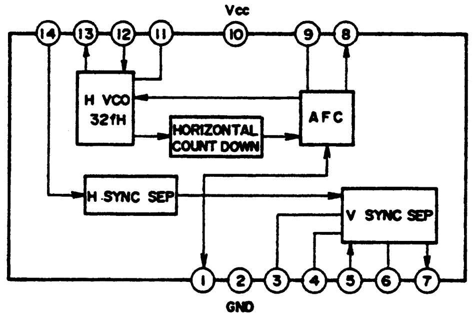
Vcc
H VCO 32fH
HORIZONTAL COUNT DOWN
AFC
H SYNC SEP
V SYNC SEP
GND

— M5278L05/09/12 —

Regulator

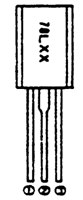

① OUT
② GND
③ IN

— M6M80011AP —

1024 bit (64 x 16 bit) CMOSEEP ROM

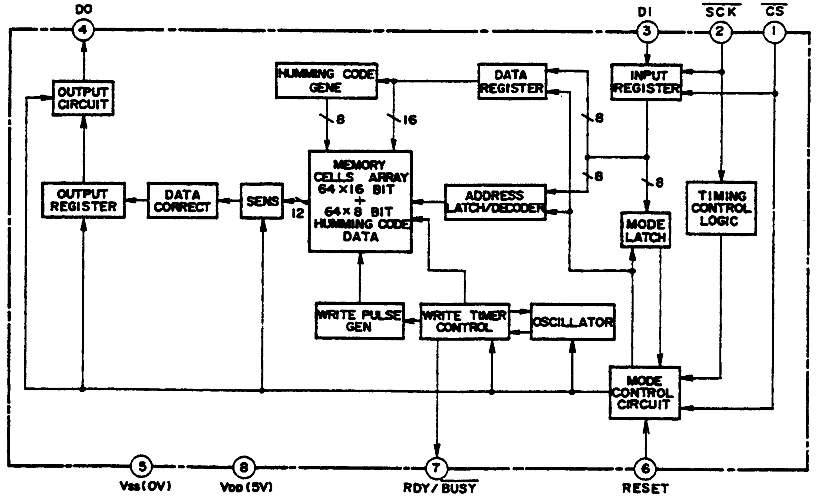
DO
DI
SCK
CS
OUTPUT CIRCUIT
HUMMING CODE GENE
DATA REGISTER
INPUT REGISTER
OUTPUT REGISTER
DATA CORRECT
SENS
MEMORY CELLS ARRAY 64×16 BIT + 64×6 BIT HUMMING CODE DATA
ADDRESS LATCH/DECODER
MODE LATCH
TIMING CONTROL LOGIC
WRITE PULSE GEN
WRITE TIMER CONTROL
OSCILLATOR
MODE CONTROL CIRCUIT
Vss (0V)
VDD (5V)
RDY/BUSY
RESET

— M5278L05M/09M/12M —

Regulator

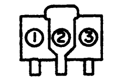

① IN
② GND
③ OUT

— M5278D05/09/12 —

Regulator

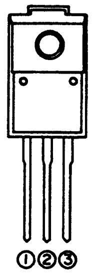

① IN
② GND
③ OUT

— M5279L12 —

Regulator

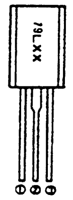

① GND
② IN
③ OUT

— M54519P —

7-Unit 400 mA Darlington
Transistor Array

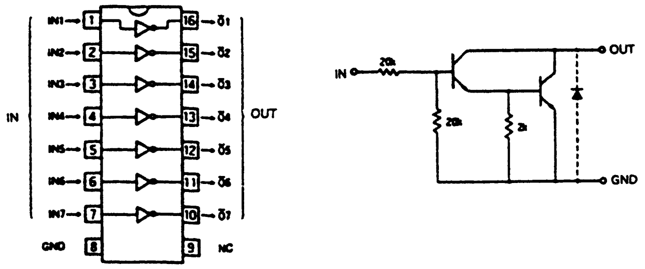
IN
OUT
GND
NC
IN
OUT
GND

— NJM567M/D —
Tone decorder/Phase locked loop

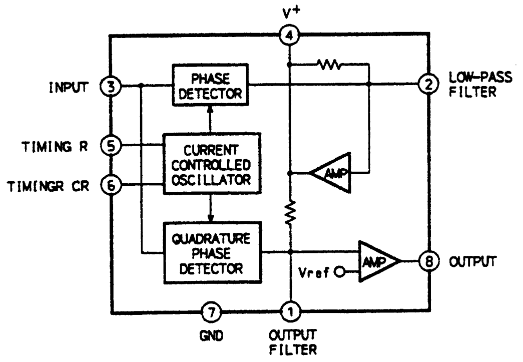
V+
4
INPUT 3
PHASE DETECTOR
2 LOW-PASS FILTER
TIMING R 5
TIMINGR CR 6
CURRENT CONTROLLED OSCILLATOR
AMP
QUADRATURE PHASE DETECTOR
Vref
AMP
8 OUTPUT
7
1
GND
OUTPUT FILTER

— NJM1496D —
Double Balanced Mod/Demodulator

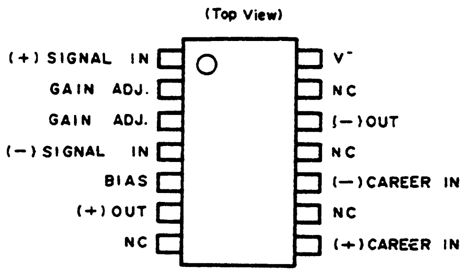
(Top View)
(+) SIGNAL IN
GAIN ADJ.
GAIN ADJ.
(−) SIGNAL IN
BIAS
(+) OUT
NC
V⁻
NC
(−) OUT
NC
(−) CAREER IN
NC
(+) CAREER IN

— NJM2068MD —
Dual Operation Amplifier

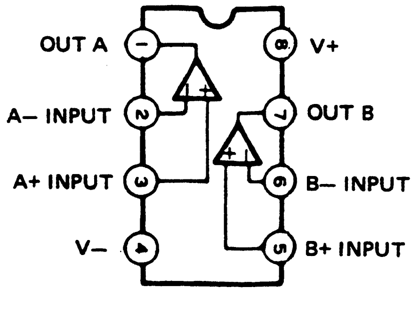
OUT A
A− INPUT
A+ INPUT
V−
V+
OUT B
B− INPUT
B+ INPUT

— NJM2068S-D —
Dual Operational Amplifier

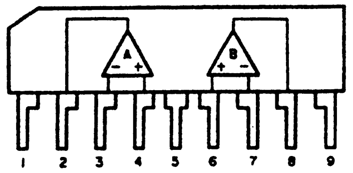
A
B
1
2
3
4
5
6
7
8
9

1. V⁺
2. A OUTPUT
3. A−INPUT
4. A+INPUT
5. V⁻
6. B+INPUT
7. B−INPUT
8. B OUTPUT
9. V⁺

— NJM2233BD —
Switching Bias Amp

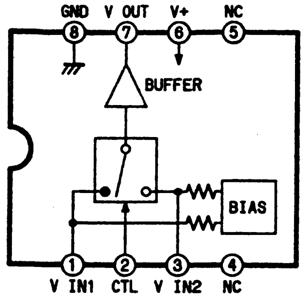
GND
V OUT
V+
NC
8
7
6
5
BUFFER
BIAS
1
2
3
4
V IN1
CTL
V IN2
NC

— NJM4556S —
Reference
NJM2068S-D

— PGD30241 —
CMOS One Time Programmable ROM

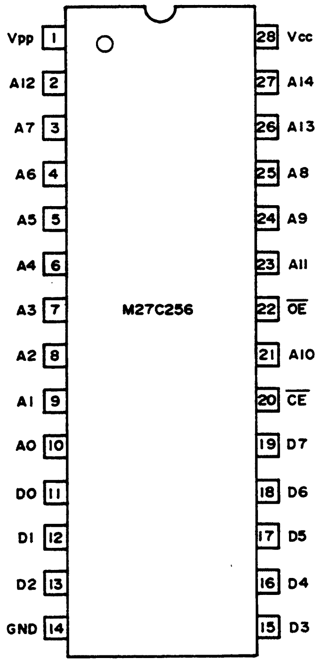
Vpp 1
A12 2
A7 3
A6 4
A5 5
A4 6
A3 7
A2 8
A1 9
A0 10
D0 11
D1 12
D2 13
GND 14
M27C256
28 Vcc
27 A14
26 A13
25 A8
24 A9
23 A11
22 OE
21 A10
20 CE
19 D7
18 D6
17 D5
16 D4
15 D3

— PGD30620 —
524288 Bit Programmed EPROM

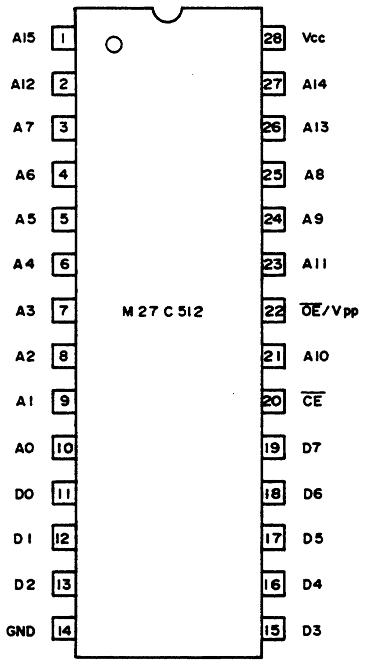
A15 1
A12 2
A7 3
A6 4
A5 5
A4 6
A3 7
A2 8
A1 9
A0 10
D0 11
D1 12
D2 13
GND 14
M 27 C 512
28 Vcc
27 A14
26 A13
25 A8
24 A9
23 A11
22 OE/Vpp
21 A10
20 CE
19 D7
18 D6
17 D5
16 D4
15 D3

— SN16913 —
Double Balanced Mixer

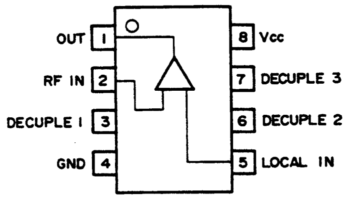
OUT 1
RF IN 2
DECUPLE I 3
GND 4
8 Vcc
7 DECUPLE 3
6 DECUPLE 2
5 LOCAL IN

— SM6430C —
Divider

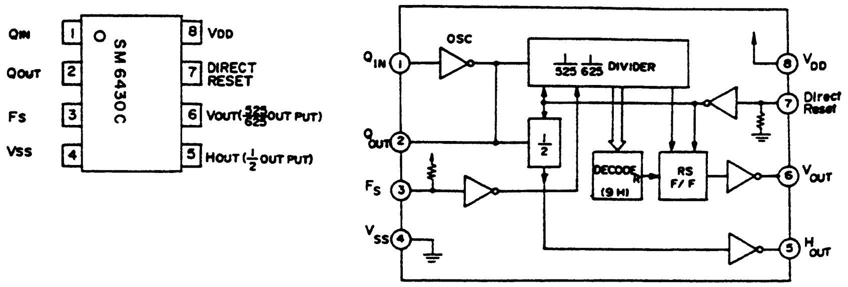
QIN 1
QOUT 2
Fs 3
VSS 4
SM 6430C
8 VDD
7 DIRECT RESET
6 VOUT(1/525 1/625 OUT PUT)
5 HOUT (1/2 OUT PUT)
OSC
QIN
1/525 1/625 DIVIDER
VDD
Direct Reset
QOUT
1/2
DECODE (9 H)
R
RS F/F
FS
VOUT
VSS
HOUT

— TA7347P —
2-Input Switch

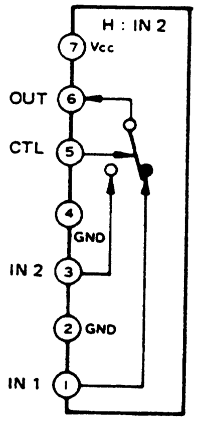
H : IN 2
7 Vcc
OUT 6
CTL 5
4 GND
IN 2 3
2 GND
IN 1 1

— TA7629P —
Dolby B Type Noise Reduction Processor

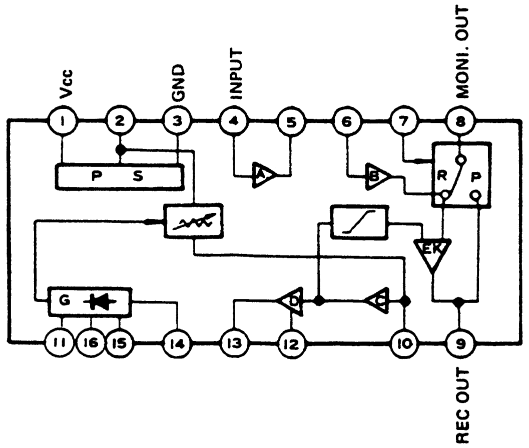
Vcc
GND
INPUT
MONI. OUT
1
2
3
4
5
6
7
8
P S
A
B
R
P
EK
G
D
C
11
16
15
14
13
12
10
9
REC OUT

— TA7742P —
2ch Preamp & Rec Amp

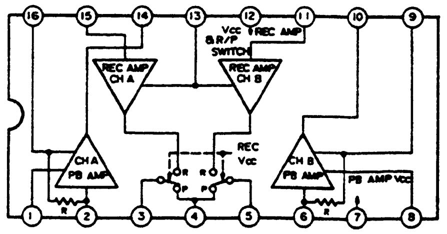
16
15
14
13
12
11
10
9
Vcc & R/P SWITCH
REC AMP
REC AMP CH A
REC AMP CH B
REC Vcc
CH A PB AMP
CH B PB AMP
PB AMP Vcc
R
P
R
1
2
3
4
5
6
7
8

[Terminal Description]

Pin No.	Description	Pin No.	Description
1	GND	9	DC FEEDBACK FILTER
2	PREAMP IN	10	PREAMP OUT
3	REC/PB SELECT SW	11	REC SIGNAL IN
4	GND	12	REC Vcc
5	REC/PB SELECT SW	13	GND
6	PREAMP IN	14	DFF IN (A/B)
7	PB Vcc	15	REC SIGNAL IN
8	GND	16	DC FEEDBACK FILTER

— TA78L009AP/012AP —
Regulator

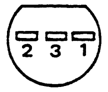

Pin1 IN
Pin2 OUT
Pin3 COMMON

— TA7348P —
3-Input Switch

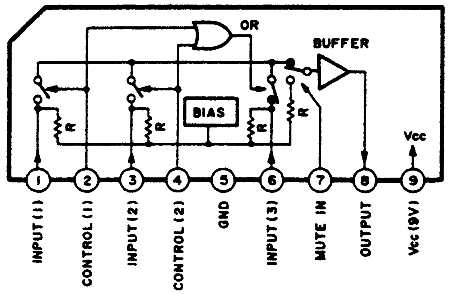
OR
BUFFER
BIAS
R
R
R
R
Vcc
1
2
3
4
5
6
7
8
9
INPUT (1)
CONTROL (1)
INPUT (2)
CONTROL (2)
GND
INPUT (3)
MUTE IN
OUTPUT
Vcc (9V)

Truth Table

CONTROL (1) 2 Pin	CONTROL (2) 4 Pin	MUTE INPUT 7 Pin	OUTPUT 8 Pin
H	L	L	INPUT(1)
L	H	L	INPUT(2)
L	L	L	INPUT(3)

— TA79L012P —
Regulator

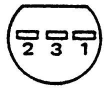

Pin1 OUT
Pin2 GND
Pin3 IN

— TA8405S —

DC Motor Drive

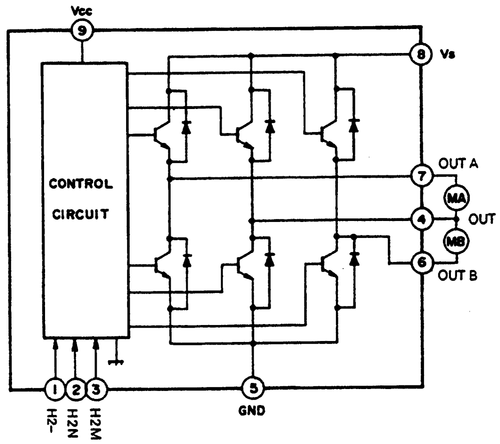
Vcc
9
8
Vs
CONTROL
CIRCUIT
OUT A
7
MA
4
OUT (C)
MB
6
OUT B
1
2
3
H2-
H2N
H2M
5
GND

TRUTH TABLE

INPUT			INPUT			MODE	
IN 1	IN 2	IN 3	OUT (C)	OUT A	OUT B	MA	MB
0	0	1/0	*	*	*	STOP	STOP
1	0	0	H	L	*	CW/CCW	STOP
1	0	1	L	H	*	CCW/CW	STOP
0	1	0	H	*	L	STOP	CW/CCW
0	1	1	L	*	H	STOP	CCW/CW
1	1	1/0	L	L	L	BRAKE	BRAKE

*: High Impedance

— TC4011BP/BF —

Quad 2 Input NAND Gate

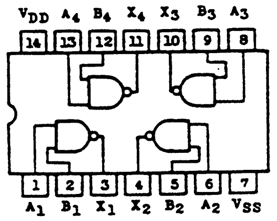
V_{DD} A_4 B_4 X_4 X_3 B_3 A_3
14 13 12 11 10 9 8
1 2 3 4 5 6 7
A_1 B_1 X_1 X_2 B_2 A_2 V_{SS}

— TC4013BP/BF —

Dual D-type Flip-Flop

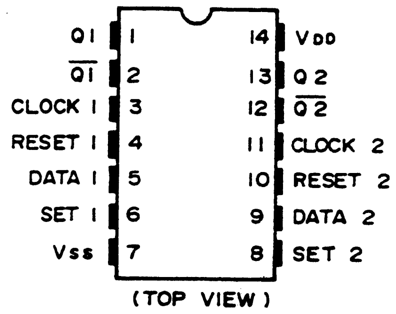
Q1 1
$\overline{Q1}$ 2
CLOCK 1 3
RESET 1 4
DATA 1 5
SET 1 6
Vss 7
14 VDD
13 Q2
12 $\overline{Q2}$
11 CLOCK 2
10 RESET 2
9 DATA 2
8 SET 2
(TOP VIEW)

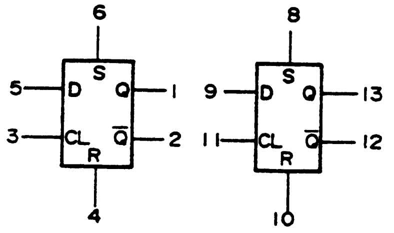
6
8
5
D
S
Q
1
9
13
3
CL
R
$\overline{Q}$
2
11
12
4
10

TRUTH TABLE

INPUTS				OUTPUTS	
RESET	SET	DATA	CLOCK △	Qn+1	$\overline{Q}$n+1
L	H	*	*	H	L
H	L	*	*	L	H
H	H	*	*	L	H
L	L	L	↑	L	H
L	L	H	↑	H	L
L	L	*	↓	Qn •	$\overline{Q}$n •

* : Don't Care

△ : Level Change

• : No Change

— TC4073BP/BF —

Triple 3 Input AND Gate

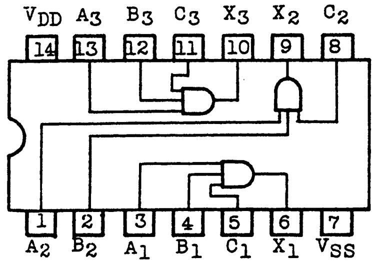
V_{DD} A_3 B_3 C_3 X_3 X_2 C_2
14 13 12 11 10 9 8
1 2 3 4 5 6 7
A_2 B_2 A_1 B_1 C_1 X_1 V_{SS}

— TC4526BF —

Programmable Divide-by-N

4-Bit Counter

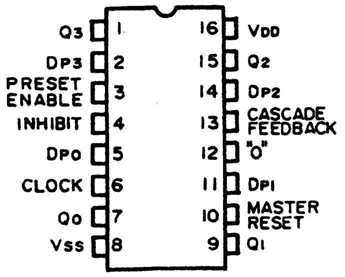
Q3 1
DP3 2
PRESET ENABLE 3
INHIBIT 4
DP0 5
CLOCK 6
Q0 7
Vss 8
16 VDD
15 Q2
14 DP2
13 CASCADE FEEDBACK
12 "0"
11 DP1
10 MASTER RESET
9 Q1

TRUTH TABLE

CLOCK	INHIBIT	PRESET ENABLE	MASTER RESET	ACTION
L	*	L	L	NO COUNT
↑	L	L	L	COUNT
*	H	L	L	NO COUNT
H	↓	L	L	COUNT
*	*	H	L	PRESET
*	*	*	H	RESET

* Don't Care

— TA8644FN —

Color Signal Processing Circuit

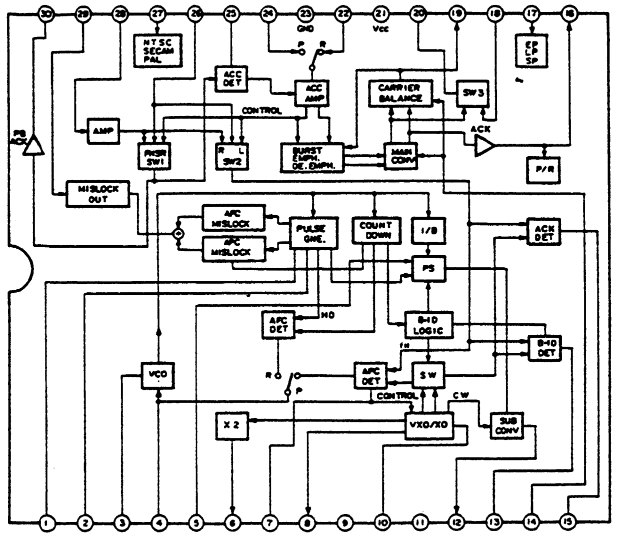
30 29 28 27 26 25 24 23 22 21 20 19 18 17 16
GND
Vcc
AMP
ACK
P/R
MISLOCK OUT
VCO
X 2
SW
1 2 3 4 5 6 7 8 9 10 11 12 13 14 15

[Terminal Description]

Pin No.	Description	Pin No.	Description
1	COMP. SYNC IN	16	PB(H)/REC(L)
2	BURST GATE PULSE OUT	17	EP(H)/LP(M)/SP(L)
3	VCO TIME CONSTANT	18	REC VIDEO IN
4	VCO CTL FILTER	19	DC FEEDBACK FILTER
5	SW PULSE IN	20	BPF DRIVE
6	2fsc OUT	21	Vcc (2)
7	VXO CTL FILTER	22	REC COLOR IN
8	VXO OUT	23	GND (2)
9	Vcc (1)	24	PB COLOR IN
10	VXO IN	25	ACC FILTER
11	GND (1)	26	COLOR IN (1)
12	SUB CONV OUT	27	NTSC(H)/SECAM(M)/PAL(L)
13	B. ID FILTER	28	COLOR IN (2)
14	CONV CARRIER IN	29	MISLOCK FILTER
15	ACK FILTER	30	COLOR OUT

— TC4051BP/BF —

Signal 8-channel

Multiplexer/Demultiplexer

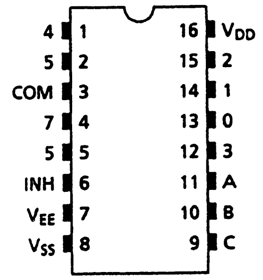
4 1
5 2
COM 3
7 4
5 5
INH 6
V_{EE} 7
V_{SS} 8
16 V_{DD}
15 2
14 1
13 0
12 3
11 A
10 B
9 C

— TC4052BP/BF —

Differential 4-channel

Multiplexer/Demultiplexer

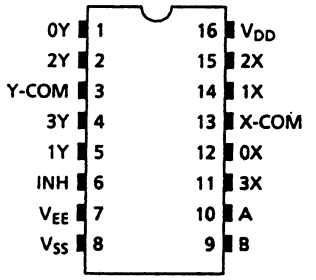
0Y 1
2Y 2
Y-COM 3
3Y 4
1Y 5
INH 6
V_{EE} 7
V_{SS} 8
16 V_{DD}
15 2X
14 1X
13 X-COM
12 0X
11 3X
10 A
9 B

— TC4053BP/BF —

Triple 2-channel

Multiplexer/Demultiplexer

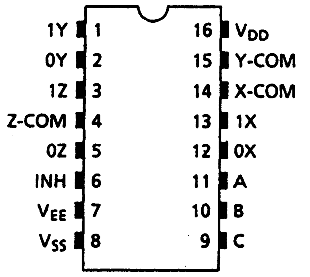
1Y 1
0Y 2
1Z 3
Z-COM 4
0Z 5
INH 6
V_{EE} 7
V_{SS} 8
16 V_{DD}
15 Y-COM
14 X-COM
13 1X
12 0X
11 A
10 B
9 C

TRUTH TABLE

CONTROL INPUTS				"ON" CHANNEL		
INHIBIT	C△	B	A	TC4051BP TC4051BF	TC4052BP TC4052BF	TC4053BP TC4053BF
L	L	L	L	0	0X, 0Y	0X, 0Y, 0Z
L	L	L	H	1	1X, 1Y	1X, 0Y,0Z
L	L	H	L	2	2X, 2Y	0X, 1Y, 0Z
L	L	H	H	3	3X, 3Y	1X, 1Y, 0Z
L	H	L	L	4	–	0X, 0Y, 1Z
L	H	L	H	5	–	1X, 0Y, 1Z
L	H	H	L	6	–	0X, 1Y, 1Z
L	H	H	H	7	–	1X, 1Y, 1Z
H	*	*	*	NONE	NONE	NOTE
* Don't Care, △Except TC4052						

— TC4066BP/BF —

Quad Bilateral Switch

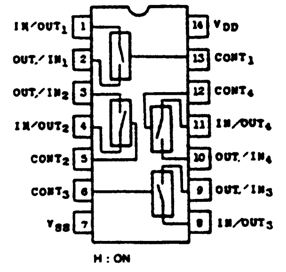
IN/OUT1 1
OUT./IN1 2
OUT./IN2 3
IN/OUT2 4
CONT2 5
CONT3 6
VSS 7
14 VDD
13 CONT1
12 CONT4
11 IN/OUT4
10 OUT./IN4
9 OUT./IN3
8 IN/OUT3
H : ON

(1/4 TC4066BP/BF)

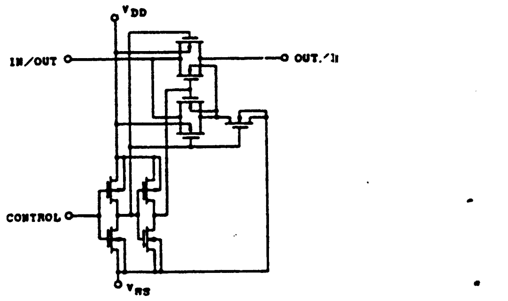
VDD
IN/OUT
OUT./I
CONTROL
VSS

— TC4538BP/BF —

Dual Precision Retriggerable/Resettable
Monostable Multivibrator

TRUTH TABLE

INPUT			OUTPUT		NOTE
AIN	BIN	CD	Q	Q̄	
↑	H	H	⊓	⊔	OUTPUT ENABLE
↑	L	H	L	H	INHIBIT
H	↓	H	L	H	INHIBIT
L	↓	H	⊓	⊔	OUTPUT ENABLE
※	※	L	L	H	INHIBIT

※ Don't Care

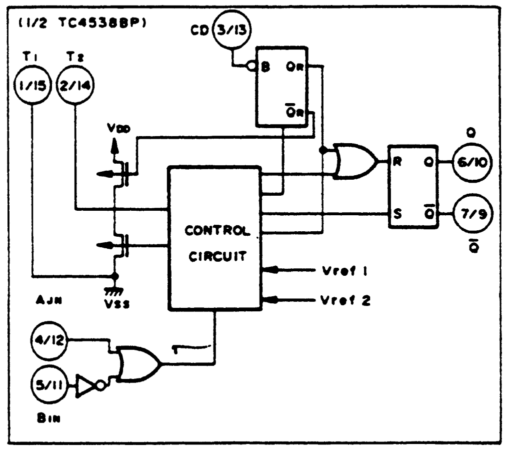
(1/2 TC4538BP)
CD
3/13
T1
T2
1/15
2/14
VDD
B
QR
Q̄R
Q
R
Q
6/10
S
Q̄
7/9
Q̄
CONTROL
CIRCUIT
Vref 1
Vref 2
AIN
VSS
4/12
5/11
BIN

— TC4572BP/BF —

Quad INV. plus, NOR plus NAND Gate

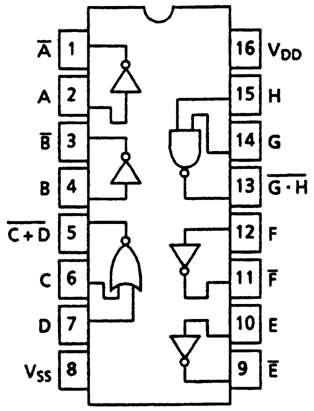
Ā 1
A 2
B̄ 3
B 4
C+D 5
C 6
D 7
VSS 8
16 VDD
15 H
14 G
13 G·H
12 F
11 F̄
10 E
9 Ē

(TOP VIEW)

— TC5068BP/TC5069BP —

BCD to 7-Segment Latch/Decoder/Driver

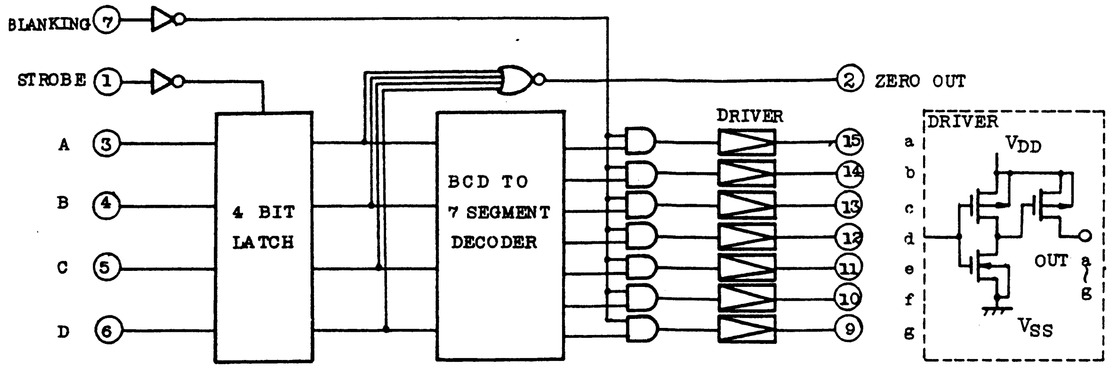
BLANKING 7
STROBE 1
A 3
B 4
C 5
D 6
4 BIT
LATCH
BCD TO
7 SEGMENT
DECODER
2 ZERO OUT
DRIVER
15
14
13
12
11
10
9
a
b
c
d
e
f
g
DRIVER
VDD
OUT a ~ g
VSS

TRUTH TABLE

INPUTS						OUTPUTS														
						TC5068BP △							TC5069BP △							ZERO OUT
ST	BL	D	C	B	A	a	b	c	d	e	f	g	a	b	c	d	e	f	g	
※	H	※	※	※	※	L	L	L	L	L	L	L	L	L	L	L	L	L	L	☆
H	L	L	L	L	L	H	H	H	H	H	H	L	H	H	H	H	H	H	L	H
H	L	L	L	L	H	L	H	H	L	L	L	L	L	H	H	L	L	L	L	L
H	L	L	L	H	L	H	H	L	H	H	L	H	H	H	L	H	H	L	H	L
H	L	L	L	H	H	H	H	H	H	L	L	H	H	H	H	H	L	L	H	L
H	L	L	H	L	L	L	H	H	L	L	H	H	L	H	H	L	L	H	H	L
H	L	L	H	L	H	H	L	H	H	L	H	H	H	L	H	H	L	H	H	L
H	L	L	H	H	L	H	L	H	H	H	H	H	H	L	H	H	H	H	H	L
H	L	L	H	H	H	H	H	H	L	L	H	L	H	H	H	L	L	H	L	L
H	L	H	L	L	L	H	H	H	H	H	H	H	H	H	H	H	H	H	H	L
H	L	H	L	L	H	H	H	H	H	L	H	H	H	H	H	H	L	H	H	L
H	L	H	L	H	L	H	H	H	L	H	H	H	L	L	L	H	H	H	L	L
H	L	H	L	H	H	L	L	H	H	H	H	H	L	H	H	L	H	H	H	L
H	L	H	H	L	L	H	L	L	H	H	H	L	H	H	H	L	H	H	H	L
H	L	H	H	L	H	L	H	H	H	H	L	H	H	H	L	L	H	H	H	L
H	L	H	H	H	L	H	L	L	H	H	H	H	L	L	L	L	L	L	H	L
H	L	H	H	H	H	H	L	L	L	H	H	H	L	L	L	L	L	L	L	L
L	L	※	※	※	※	△△														

※ ; Don't care
☆ ; Undetermined
△△ ; Depends Upon the BCD Code Previously applied when ST = "H"
△ ; Required pull down resister "R_L"

— TC5564APL-15 —

8192 Word x8 Bit CMOS RAM

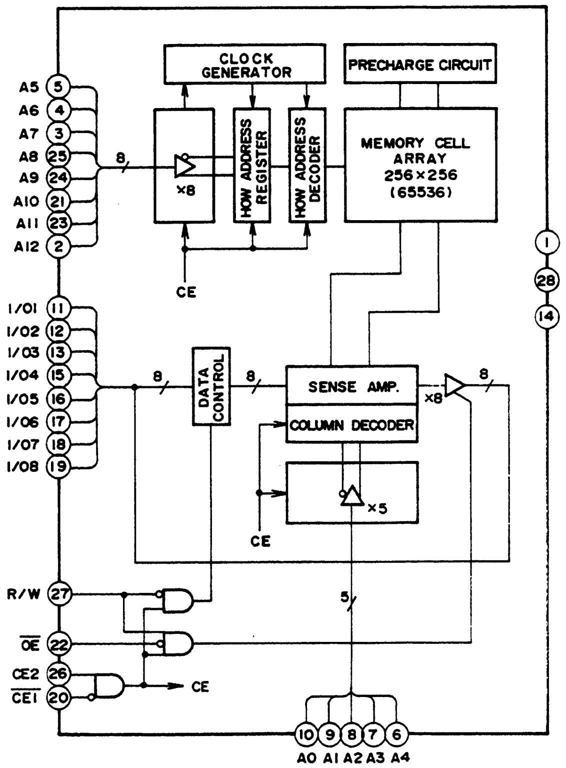
CLOCK
GENERATOR
PRECHARGE CIRCUIT
A5 5
A6 4
A7 3
A8 25
A9 24
A10 21
A11 23
A12 2
8
×8
HOW ADDRESS REGISTER
HOW ADDRESS DECODER
MEMORY CELL
ARRAY
256×256
(65536)
CE
1 NC
28 VDD
14 GND
I/O1 11
I/O2 12
I/O3 13
I/O4 15
I/O5 16
I/O6 17
I/O7 18
I/O8 19
8
DATA CONTROL
8
SENSE AMP.
COLUMN DECODER
×8
8
×5
CE
R/W 27
OE 22
CE2 26
CE1 20
CE
5
10 9 8 7 6
A0 A1 A2 A3 A4

— TC4W53F —

2 Channel Multi Plexer/Demulti Plexer

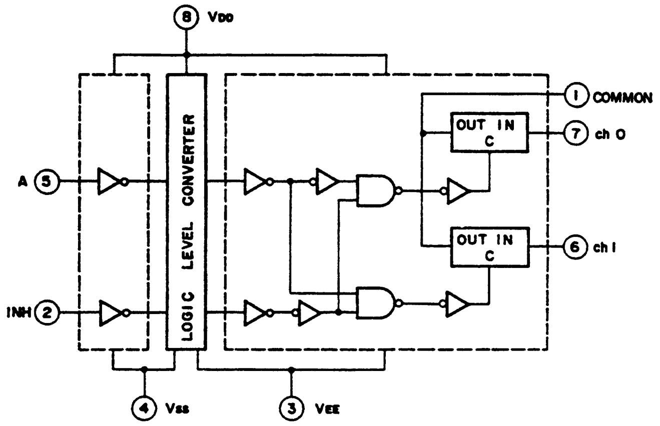
8 VDD
A 5
INH 2
LOGIC LEVEL CONVERTER
1 COMMON
OUT IN
C
7 ch 0
OUT IN
C
6 ch 1
4 VSS
3 VEE

TRUTH TABLE

CONTROL INH	INPUT A	ON CHANNEL
L	L	ch 0
L	H	ch 1
H	*	NONE

*Don't Care

— TC4S30F —

Exclusive-OR Gate

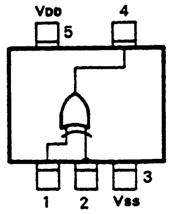
VDD
5
4
3
1
2
VSS

— TC7W04F —

Triple Inverter

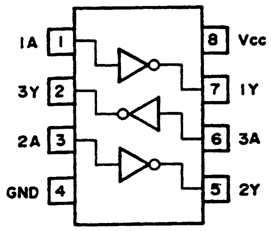
1A 1
3Y 2
2A 3
GND 4
8 Vcc
7 1Y
6 3A
5 2Y

— TC7W08F —

Dual AND Gate

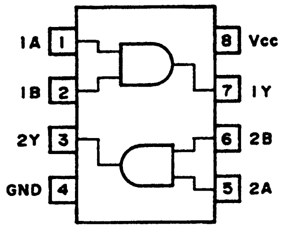
1A 1
1B 2
2Y 3
GND 4
8 Vcc
7 1Y
6 2B
5 2A

— TC74HC00AF/AP —

Quad 2-Input NAND Gate

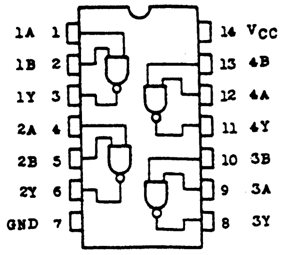
1A 1
1B 2
1Y 3
2A 4
2B 5
2Y 6
GND 7
14 VCC
13 4B
12 4A
11 4Y
10 3B
9 3A
8 3Y

(TOP VIEW)

— TC74HC04AF/AP —

Hex Inverter

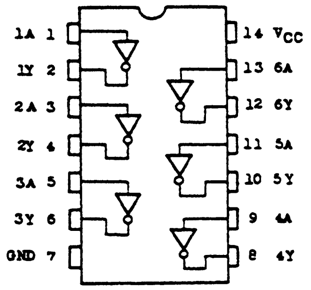
1A 1
1Y 2
2A 3
2Y 4
3A 5
3Y 6
GND 7
14 VCC
13 6A
12 6Y
11 5A
10 5Y
9 4A
8 4Y

(Top View)

— TC74HC08AF/AP —

Quad 2-Input AND Gate

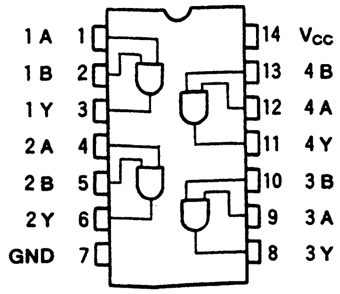
1A 1
1B 2
1Y 3
2A 4
2B 5
2Y 6
GND 7
14 Vcc
13 4B
12 4A
11 4Y
10 3B
9 3A
8 3Y

(TOP VIEW)

— TC74HC11AP/AF —

Triple 3-Input AND Gate

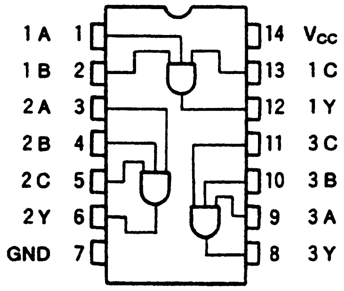
1A 1
1B 2
2A 3
2B 4
2C 5
2Y 6
GND 7
14 Vcc
13 1C
12 1Y
11 3C
10 3B
9 3A
8 3Y

(TOP VIEW)

— TC74HC14AP/AF —
Hex Schmitt Inverter

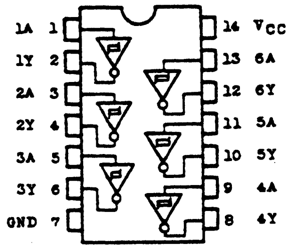
1A 1
1Y 2
2A 3
2Y 4
3A 5
3Y 6
GND 7
14 Vcc
13 6A
12 6Y
11 5A
10 5Y
9 4A
8 4Y

(Top View)

— TC74HC32AP/AF—
Quad 2-Input OR Gate

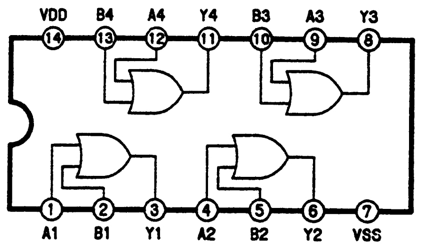
VDD
B4
A4
Y4
B3
A3
Y3
14
13
12
11
10
9
8
1
2
3
4
5
6
7
A1
B1
Y1
A2
B2
Y2
VSS

— TC74HC74AP/AF —
Dual D Flip-Flop with Preset and Clear

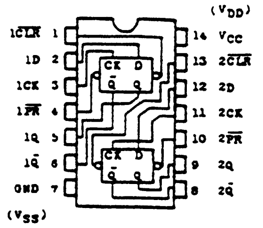
(VDD)
1CLR 1
1D 2
1CK 3
1PR 4
1Q 5
1Q 6
GND 7
(VSS)
14 Vcc
13 2CLR
12 2D
11 2CK
10 2PR
9 2Q
8 2Q
CK
D
Q
Q

TRUTH TABLE

INPUTS				OUTPUTS		FUNCTION
$\overline{CLR}$	$\overline{PR}$	D	CK	Q	$\bar{Q}$	
L	H	●	●	L	H	CLEAR
H	L	●	●	H	L	PRESET
L	L	●	●	H	H	—
H	H	L	↑	L	H	—
H	H	H	↑	H	L	—
H	H	●	↓	Qn	$\bar{Q}$n	NO CHANGE

● Don't care

— TC74HC86AP/AF —
Quad Exclusive OR Gate

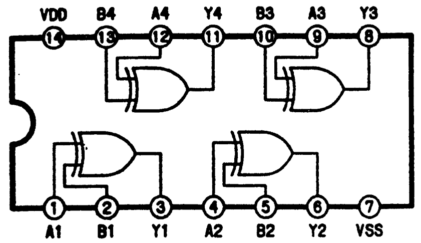
VDD
B4
A4
Y4
B3
A3
Y3
14
13
12
11
10
9
8
1
2
3
4
5
6
7
A1
B1
Y1
A2
B2
Y2
VSS

$Y = A \oplus B = \bar{A}B + A\bar{B}$

TRUTH TABLE

INPUTS		OUTPUTS
A	B	Y
L	L	L
L	H	H
H	L	H
H	H	L

— TC74HC126AP/AF —
Quad Bus Buffer

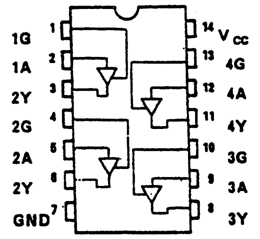
1G 1
1A 2
2Y 3
2G 4
2A 5
2Y 6
GND 7
14 Vcc
13 4G
12 4A
11 4Y
10 3G
9 3A
8 3Y

(TOP VIEW)

TRUTH TABLE

INPUTS		OUTPUTS
G	A	Y
L	X	Z
H	L	L
H	H	H

X:Don't Cate
Z: High impedance

— TC74HC151AF —
8-channel multiplexer

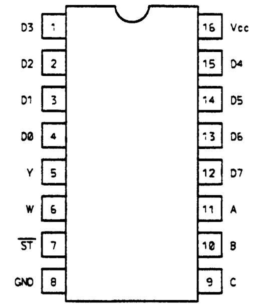
D3 1
D2 2
D1 3
D0 4
Y 5
W 6
ST 7
GND 8
16 Vcc
15 D4
14 D5
13 D6
12 D7
11 A
10 B
9 C

INPUTS				OUTPUTS	
SELECT			STOROBE	Y	W
C	B	A	$\overline{ST}$		
X	X	X	H	L	H
L	L	L	L	D0	$\overline{D0}$
L	L	H	L	D1	$\overline{D1}$
L	H	L	L	D2	$\overline{D2}$
L	H	H	L	D3	$\overline{D3}$
H	L	L	L	D4	$\overline{D4}$
H	L	H	L	D5	$\overline{D5}$
H	H	L	L	D6	$\overline{D6}$
H	H	H	L	D7	$\overline{D7}$

X·Don't care

— TC74HC138AP/AF —
3 To 8 Line Decoder

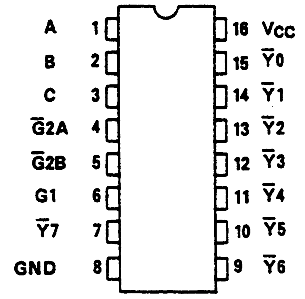
A 1
B 2
C 3
G2A 4
G2B 5
G1 6
Y7 7
GND 8
16 Vcc
15 Y0
14 Y1
13 Y2
12 Y3
11 Y4
10 Y5
9 Y6

(TOP VIEW)

TRUTH TABLE

INPUTS						OUTPUTS								SELECTED OUTPUT
ENABLE			SELECT											
G1	$\overline{G2A}$	$\overline{G2B}$	C	B	A	$\overline{Y0}$	$\overline{Y1}$	$\overline{Y2}$	$\overline{Y3}$	$\overline{Y4}$	$\overline{Y5}$	$\overline{Y6}$	$\overline{Y7}$	
L	X	X	X	X	X	H	H	H	H	H	H	H	H	NONE
X	H	X	X	X	X	H	H	H	H	H	H	H	H	NONE
X	X	H	X	X	X	H	H	H	H	H	H	H	H	NONE
H	L	L	L	L	L	L	H	H	H	H	H	H	H	$\overline{Y0}$
H	L	L	L	L	H	H	L	H	H	H	H	H	H	$\overline{Y1}$
H	L	L	L	H	L	H	H	L	H	H	H	H	H	$\overline{Y2}$
H	L	L	L	H	H	H	H	H	L	H	H	H	H	$\overline{Y3}$
H	L	L	H	L	L	H	H	H	H	L	H	H	H	$\overline{Y4}$
H	L	L	H	L	H	H	H	H	H	H	L	H	H	$\overline{Y5}$
H	L	L	H	H	L	H	H	H	H	H	H	L	H	$\overline{Y6}$
H	L	L	H	H	H	H	H	H	H	H	H	H	L	$\overline{Y7}$

X : Don't Care

— TC74HC244AP/AF —
Octal 3-State Outputs

(TOP VIEW)

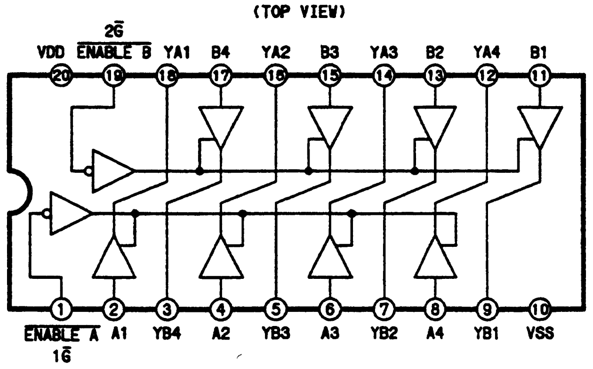
2G
VDD
ENABLE B
YA1
B4
YA2
B3
YA3
B2
YA4
B1
20
19
18
17
16
15
14
13
12
11
1
2
3
4
5
6
7
8
9
10
ENABLE A
1G
A1
YB4
A2
YB3
A3
YB2
A4
YB1
VSS

TRUTH TABLE

$1\bar{G}$	1A	1Y	$2\bar{G}$	2A	2Y
L	L	L	L	L	L
L	H	H	L	H	H
H	L	Z	H	L	Z
H	H	Z	H	H	Z

— TC74HC245AP/AF —
3 State Non-Inverting

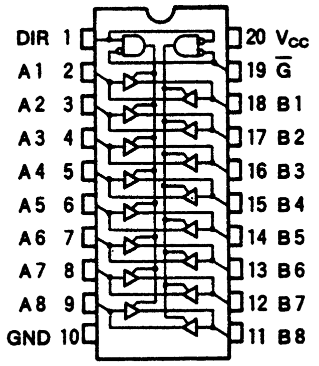
DIR 1
A1 2
A2 3
A3 4
A4 5
A5 6
A6 7
A7 8
A8 9
GND 10
20 Vcc
19 G
18 B1
17 B2
16 B3
15 B4
14 B5
13 B6
12 B7
11 B8

— TC74HC393AP/AF —
Dual Binary Counter

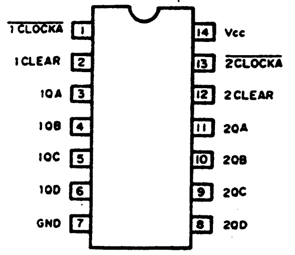
1CLOCKA 1
1CLEAR 2
1QA 3
1QB 4
1QC 5
1QD 6
GND 7
14 Vcc
13 2CLOCKA
12 2CLEAR
11 2QA
10 2QB
9 2QC
8 2QD

DUAL BINARY COUNTER

TRUTH TABLE

INPUTS		OUTPUTS
$\overline{CK}$	CLR	Q0 — Q3
X	H	L
↓	L	COUNT UP
↑	L	NO CHANGE

— TC74HC4053AF —
Reference
TC4053BP/BF

— TC74HC541AP/AF —
Non-Inverted, 3 State Outputs

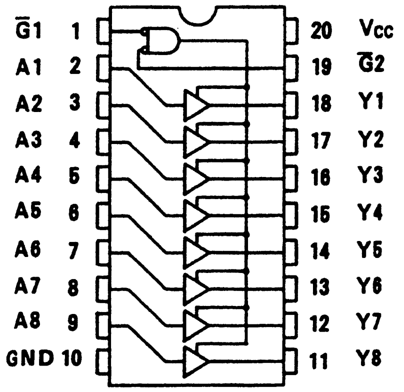
G1 1
A1 2
A2 3
A3 4
A4 5
A5 6
A6 7
A7 8
A8 9
GND 10
20 Vcc
19 G2
18 Y1
17 Y2
16 Y3
15 Y4
14 Y5
13 Y6
12 Y7
11 Y8

— TC74HC4020AP/AF —
14-Stage Binary Counter

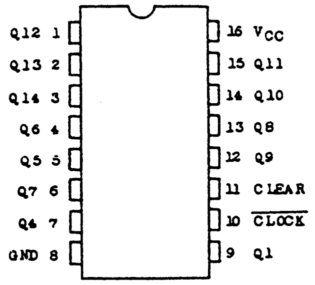
Q12 1
Q13 2
Q14 3
Q6 4
Q5 5
Q7 6
Q4 7
GND 8
16 Vcc
15 Q11
14 Q10
13 Q8
12 Q9
11 CLEAR
10 CLOCK
9 Q1

TRUTH TABLE

$\overline{CLOCK}$	CLEAR	OUTPUT STATE
X	H	ALL OUTPUTS = 'L'
↑	L	NO CHANGE
↓	L	ADVANCE TO NEXT STATE

X : DON'T CARE

— TC74HC4028AP/AF —
BCD -to- Decimal Decoder

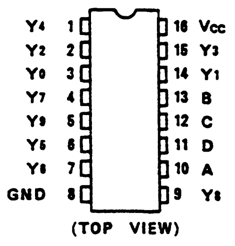
Y4 1
Y2 2
Y0 3
Y7 4
Y9 5
Y5 6
Y6 7
GND 8
16 Vcc
15 Y3
14 Y1
13 B
12 C
11 D
10 A
9 Y8

(TOP VIEW)

TRUTH TABLE

INPUTS				OUTPUTS										SELECTED OUTPUT
D	C	B	A	Y0	Y1	Y2	Y3	Y4	Y5	Y6	Y7	Y8	Y9	
L	L	L	L	H	L	L	L	L	L	L	L	L	L	Y0
L	L	L	H	L	H	L	L	L	L	L	L	L	L	Y1
L	L	H	L	L	L	H	L	L	L	L	L	L	L	Y2
L	L	H	H	L	L	L	H	L	L	L	L	L	L	Y3
L	H	L	L	L	L	L	L	H	L	L	L	L	L	Y4
L	H	L	H	L	L	L	L	L	H	L	L	L	L	Y5
L	H	H	L	L	L	L	L	L	L	H	L	L	L	Y6
L	H	H	H	L	L	L	L	L	L	L	H	L	L	Y7
H	L	L	L	L	L	L	L	L	L	L	L	H	L	Y8
H	L	L	H	L	L	L	L	L	L	L	L	L	H	Y9
H	X	H	X	L	L	L	L	L	L	L	L	L	L	NONE
H	H	X	X	L	L	L	L	L	L	L	L	L	L	NONE

X:Don't care

— TC74HC4066AP —
Reference
TC4066BP/BF

— TC74HC4538AF/AP —
Reference
TC4538BP

4-86

— TD62583AP —

8-single Driver

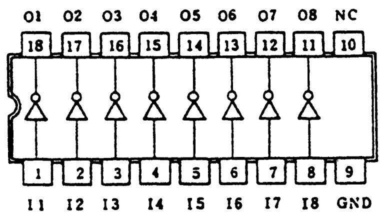
O1 O2 O3 O4 O5 O6 O7 O8 NC
18 17 16 15 14 13 12 11 10
1 2 3 4 5 6 7 8 9
I1 I2 I3 I4 I5 I6 I7 I8 GND

— TMPZ84C30AP-6 —

Counter Timer Circuit

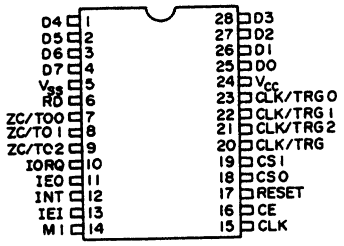
D4 1
D5 2
D6 3
D7 4
Vss 5
RD 6
ZC/TO0 7
ZC/TO1 8
ZC/TC2 9
IORQ 10
IEO 11
INT 12
IEI 13
M1 14
28 D3
27 D2
26 D1
25 D0
24 Vcc
23 CLK/TRG0
22 CLK/TRG1
21 CLK/TRG2
20 CLK/TRG
19 CS1
18 CS0
17 RESET
16 CE
15 CLK

— TMP82C255AN-2 —

Programmable Peripheral Interface

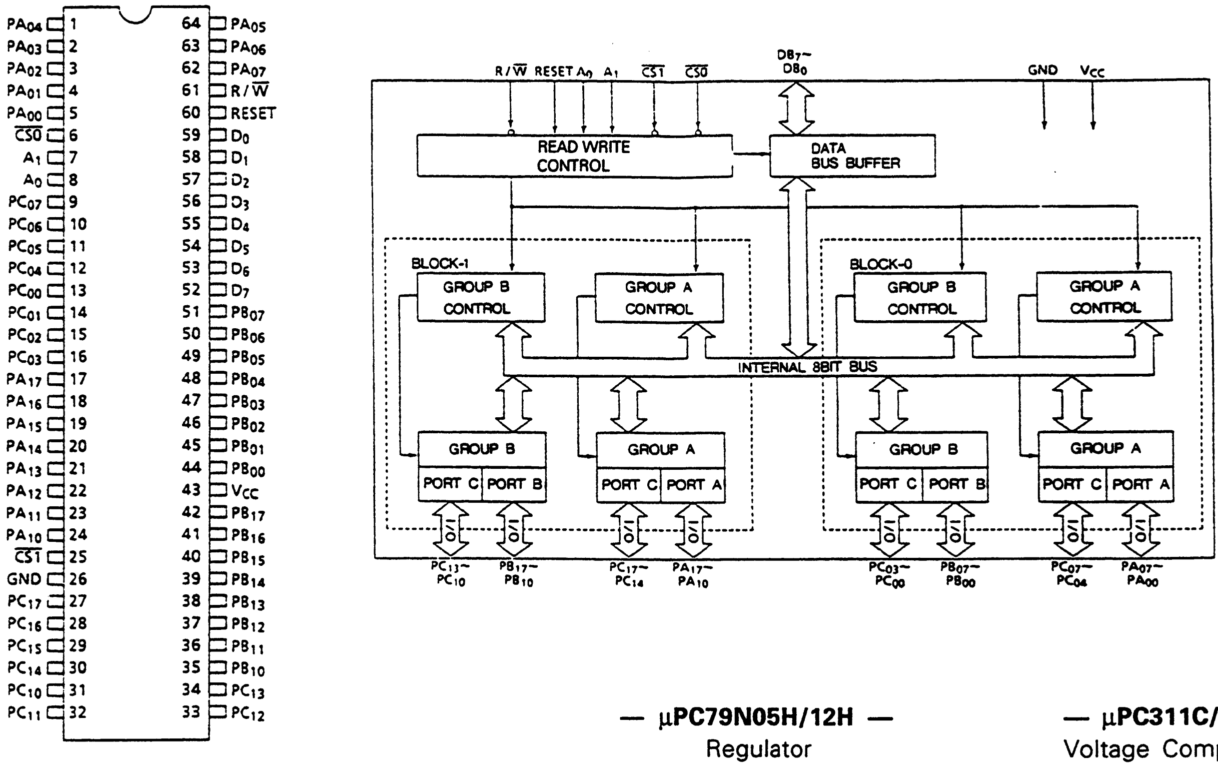
PA04 1
PA03 2
PA02 3
PA01 4
PA00 5
CS0 6
A1 7
A0 8
PC07 9
PC06 10
PC05 11
PC04 12
PC00 13
PC01 14
PC02 15
PC03 16
PA17 17
PA16 18
PA15 19
PA14 20
PA13 21
PA12 22
PA11 23
PA10 24
CS1 25
GND 26
PC17 27
PC16 28
PC15 29
PC14 30
PC10 31
PC11 32
64 PA05
63 PA06
62 PA07
61 R/W
60 RESET
59 D0
58 D1
57 D2
56 D3
55 D4
54 D5
53 D6
52 D7
51 PB07
50 PB06
49 PB05
48 PB04
47 PB03
46 PB02
45 PB01
44 PB00
43 Vcc
42 PB17
41 PB16
40 PB15
39 PB14
38 PB13
37 PB12
36 PB11
35 PB10
34 PC13
33 PC12
R/W RESET A0 A1 CS1 CS0
DB7~DB0
GND Vcc
READ WRITE CONTROL
DATA BUS BUFFER
BLOCK-1
BLOCK-0
GROUP B CONTROL
GROUP A CONTROL
INTERNAL 8BIT BUS
GROUP B
GROUP A
PORT C
PORT B
PORT A
I/O
PC13~PC10
PB17~PB10
PC17~PC14
PA17~PA10
PC03~PC00
PB07~PB00
PC07~PC04
PA07~PA00

— TMP82C55AF-2 —

CMOS Programmablf Peripheral Interface

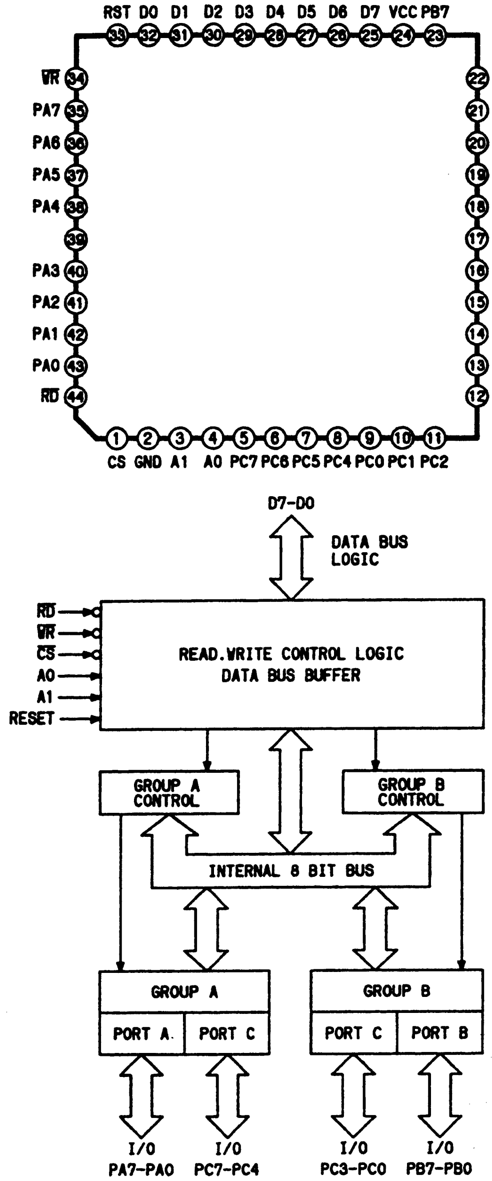
RST D0 D1 D2 D3 D4 D5 D6 D7 VCC PB7
33 32 31 30 29 28 27 26 25 24 23
WR 34
PA7 35
PA6 36
PA5 37
PA4 38
39
PA3 40
PA2 41
PA1 42
PA0 43
RD 44
22
21 PB6
20 PB5
19 PB4
18 PB3
17 VCC
16 PB2
15 PB1
14 PB0
13 PC3
12
1 2 3 4 5 6 7 8 9 10 11
CS GND A1 A0 PC7 PC6 PC5 PC4 PC0 PC1 PC2
D7-D0
DATA BUS LOGIC
RD
WR
CS
A0
A1
RESET
READ.WRITE CONTROL LOGIC
DATA BUS BUFFER
GROUP A CONTROL
GROUP B CONTROL
INTERNAL 8 BIT BUS
GROUP A
GROUP B
PORT A
PORT C
PORT B
I/O
PA7-PA0
PC7-PC4
PC3-PC0
PB7-PB0

— µPC79N05H/12H —

Regulator

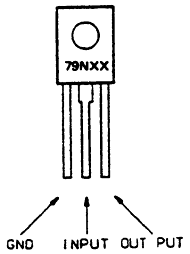
79NXX
GND
INPUT
OUT PUT

— µPC311C/G2 —

Voltage Comparator

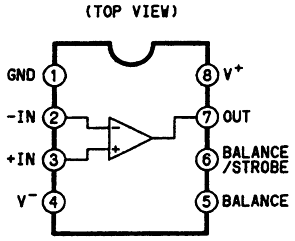
(TOP VIEW)
GND 1
-IN 2
+IN 3
V- 4
8 V+
7 OUT
6 BALANCE /STROBE
5 BALANCE

— TL431CLP —

Regulator

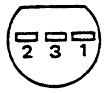

Pin1 REF
Pin2 CATHODE
Pin3 ANODE

— TMP91C640N —

One Time Micro Computer

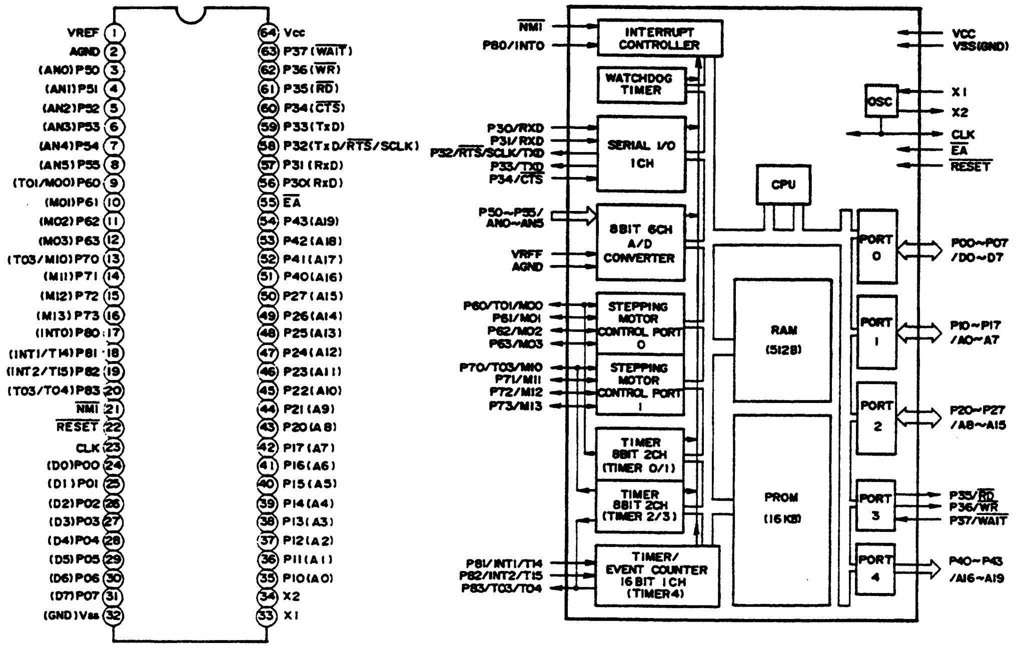
VREF 1
AGND 2
(AN0)P50 3
(AN1)P51 4
(AN2)P52 5
(AN3)P53 6
(AN4)P54 7
(AN5)P55 8
(TO1/MO0)P60 9
(MO1)P61 10
(MO2)P62 11
(MO3)P63 12
(TO3/MI0)P70 13
(MI1)P71 14
(MI2)P72 15
(MI3)P73 16
(INT0)P80 17
(INT1/TI4)P81 18
(INT2/TI5)P82 19
(TO3/TO4)P83 20
NMI 21
RESET 22
CLK 23
(D0)P00 24
(D1)P01 25
(D2)P02 26
(D3)P03 27
(D4)P04 28
(D5)P05 29
(D6)P06 30
(D7)P07 31
(GND)Vss 32
64 Vcc
63 P37(WAIT)
62 P36(WR)
61 P35(RD)
60 P34(CTS)
59 P33(TxD)
58 P32(TxD/RTS/SCLK)
57 P31(RxD)
56 P30(RxD)
55 EA
54 P43(A19)
53 P42(A18)
52 P41(A17)
51 P40(A16)
50 P27(A15)
49 P26(A14)
48 P25(A13)
47 P24(A12)
46 P23(A11)
45 P22(A10)
44 P21(A9)
43 P20(A8)
42 P17(A7)
41 P16(A6)
40 P15(A5)
39 P14(A4)
38 P13(A3)
37 P12(A2)
36 P11(A1)
35 P10(A0)
34 X2
33 X1
NMI
P80/INT0
INTERRUPT CONTROLLER
WATCHDOG TIMER
P30/RXD
P31/RXD
P32/RTS/SCLK/TXD
P33/TXD
P34/CTS
SERIAL I/O 1CH
P50~P55/AN0~AN5
VRFF
AGND
8BIT 6CH A/D CONVERTER
P60/TO1/MO0
P61/MO1
P62/MO2
P63/MO3
STEPPING MOTOR CONTROL PORT 0
P70/TO3/MI0
P71/MI1
P72/MI2
P73/MI3
STEPPING MOTOR CONTROL PORT 1
TIMER 8BIT 2CH (TIMER 0/1)
TIMER 8BIT 2CH (TIMER 2/3)
P81/INT1/TI4
P82/INT2/TI5
P83/TO3/TO4
TIMER/ EVENT COUNTER 16BIT 1CH (TIMER4)
CPU
RAM (512B)
PROM (16KB)
OSC
VCC
VSS(GND)
X1
X2
CLK
EA
RESET
PORT 0
PORT 1
PORT 2
PORT 3
PORT 4
P00~P07 /D0~D7
P10~P17 /A0~A7
P20~P27 /A8~A15
P35/RD
P36/WR
P37/WAIT
P40~P43 /A16~A19

— µPC78N05H/12H —

Regulator

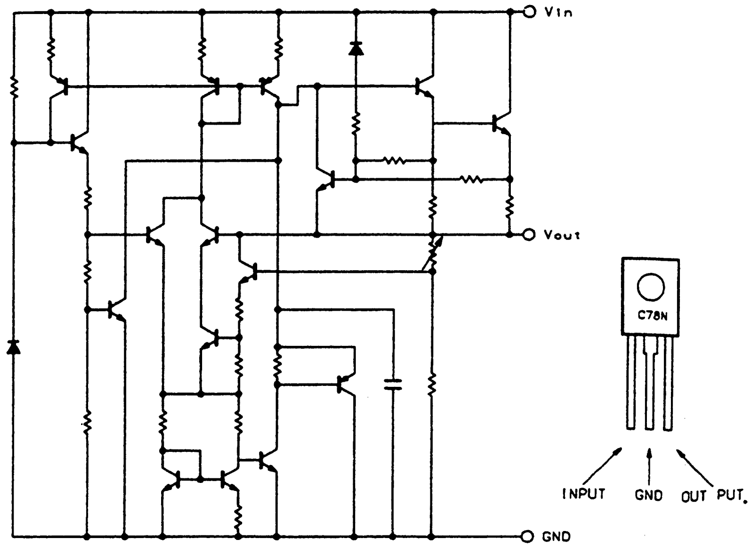
Vin
Vout
GND
C78N
INPUT
GND
OUT PUT

— µPC319C/G2 —

Dual comparator

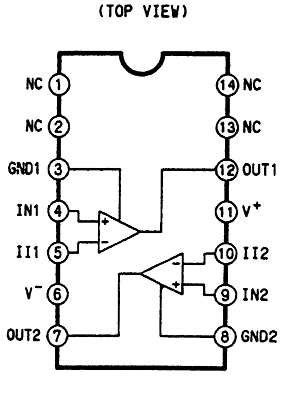
(TOP VIEW)
NC 1
NC 2
GND1 3
IN1 4
II1 5
V- 6
OUT2 7
14 NC
13 NC
12 OUT1
11 V+
10 II2
9 IN2
8 GND2

— µPC393C —

Reference
AN1082S

— µPC4082G2 —

Reference
AN1082S

— µPD74HC04G —

Hex Inverter

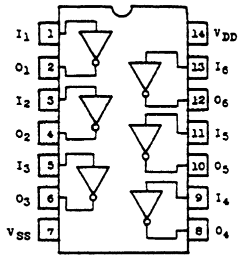
I1
O1
I2
O2
I3
O3
VSS
VDD
I6
O6
I5
O5
I4
O4
1
2
3
4
5
6
7
14
13
12
11
10
9
8

(TOP VIEW)

— µPD75P116CW —

8 Bit Micro Computer

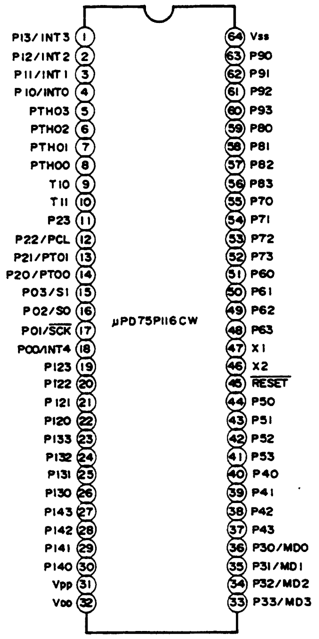
P13/INT3 1
P12/INT2 2
P11/INT1 3
P10/INT0 4
PTH03 5
PTH02 6
PTH01 7
PTH00 8
TI0 9
TI1 10
P23 11
P22/PCL 12
P21/PTO1 13
P20/PTO0 14
P03/SI 15
P02/SO 16
P01/SCK 17
P00/INT4 18
P123 19
P122 20
P121 21
P120 22
P133 23
P132 24
P131 25
P130 26
P143 27
P142 28
P141 29
P140 30
Vpp 31
VDD 32
64 Vss
63 P90
62 P91
61 P92
60 P93
59 P80
58 P81
57 P82
56 P83
55 P70
54 P71
53 P72
52 P73
51 P60
50 P61
49 P62
48 P63
47 X1
46 X2
45 RESET
44 P50
43 P51
42 P52
41 P53
40 P40
39 P41
38 P42
37 P43
36 P30/MD0
35 P31/MD1
34 P32/MD2
33 P33/MD3
µPD75P116CW

— µPD78P138GF —

8 Bit Micro Computer

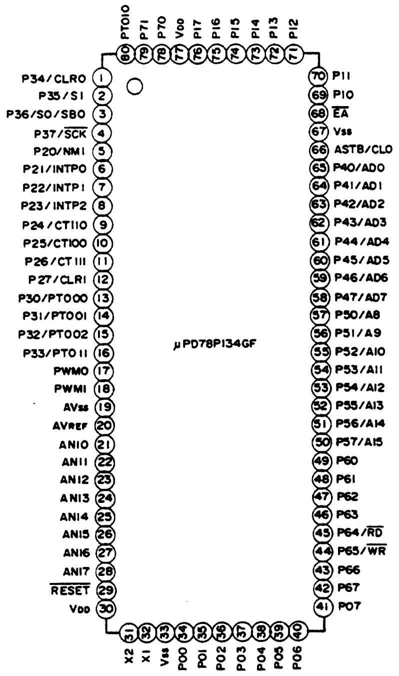
PTO10 80
P71 79
P70 78
VDD 77
P17 76
P16 75
P15 74
P14 73
P13 72
P12 71
P34/CLR0 1
P35/SI 2
P36/SO/SB0 3
P37/SCK 4
P20/NMI 5
P21/INTP0 6
P22/INTP1 7
P23/INTP2 8
P24/CTI10 9
P25/CTI00 10
P26/CTI11 11
P27/CLR1 12
P30/PTO00 13
P31/PTO01 14
P32/PTO02 15
P33/PTO11 16
PWM0 17
PWM1 18
AVss 19
AVREF 20
ANI0 21
ANI1 22
ANI2 23
ANI3 24
ANI4 25
ANI5 26
ANI6 27
ANI7 28
RESET 29
VDD 30
70 P11
69 P10
68 EA
67 Vss
66 ASTB/CLO
65 P40/AD0
64 P41/AD1
63 P42/AD2
62 P43/AD3
61 P44/AD4
60 P45/AD5
59 P46/AD6
58 P47/AD7
57 P50/A8
56 P51/A9
55 P52/A10
54 P53/A11
53 P54/A12
52 P55/A13
51 P56/A14
50 P57/A15
49 P60
48 P61
47 P62
46 P63
45 P64/RD
44 P65/WR
43 P66
42 P67
41 P07
31 X2
32 X1
33 Vss
34 P00
35 P01
36 P02
37 P03
38 P04
39 P05
40 P06
µPD78P134GF

— µPD78P214CW —

8 Bit Micro Computer

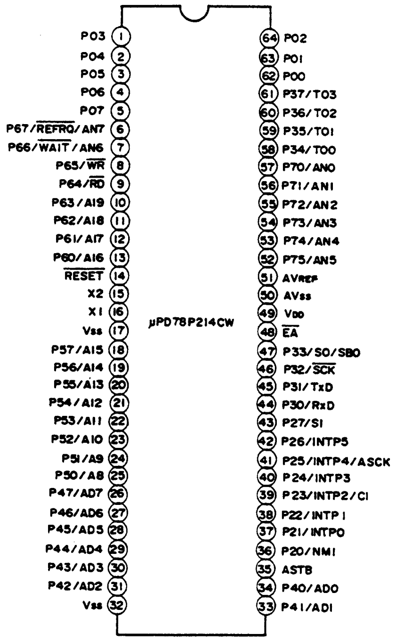
P03 1
P04 2
P05 3
P06 4
P07 5
P67/REFRQ/AN7 6
P66/WAIT/AN6 7
P65/WR 8
P64/RD 9
P63/A19 10
P62/A18 11
P61/A17 12
P60/A16 13
RESET 14
X2 15
X1 16
Vss 17
P57/A15 18
P56/A14 19
P55/A13 20
P54/A12 21
P53/A11 22
P52/A10 23
P51/A9 24
P50/A8 25
P47/AD7 26
P46/AD6 27
P45/AD5 28
P44/AD4 29
P43/AD3 30
P42/AD2 31
Vss 32
64 P02
63 P01
62 P00
61 P37/TO3
60 P36/TO2
59 P35/TO1
58 P34/TO0
57 P70/AN0
56 P71/AN1
55 P72/AN2
54 P73/AN3
53 P74/AN4
52 P75/AN5
51 AVREF
50 AVss
49 VDD
48 EA
47 P33/SO/SB0
46 P32/SCK
45 P31/TxD
44 P30/RxD
43 P27/SI
42 P26/INTP5
41 P25/INTP4/ASCK
40 P24/INTP3
39 P23/INTP2/CI
38 P22/INTP1
37 P21/INTP0
36 P20/NMI
35 ASTB
34 P40/AD0
33 P41/AD1
µPD78P214CW

— µPD4001BG —

Quad 2 Input NOR Gate

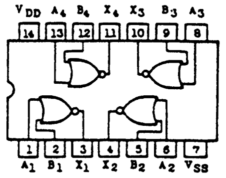
VDD
A4
B4
X4
X3
B3
A3
14
13
12
11
10
9
8
1
2
3
4
5
6
7
A1
B1
X1
X2
B2
A2
VSS

— µPD4053BG —

Reference
TC4053BP/BF

— µPD4013BG —

Dual D-type Flip-Flop

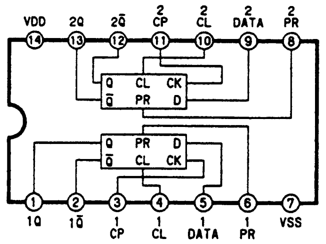
VDD
2Q
2Q̄
2 CP
2 CL
2 DATA
2 PR
14
13
12
11
10
9
8
Q
CL
CK
Q̄
PR
D
Q
PR
D
Q̄
CL
CK
1
2
3
4
5
6
7
1Q
1Q̄
1 CP
1 CL
1 DATA
1 PR
VSS

TRUTH TABLE

INPUTS				OUTPUTS	
CLOCK$^{\tau}$	DATA	RESET	SET	Q	Q̄
↑	0	0	0	0	1
↑	1	0	0	1	0
↓	×	0	0	Q	Q̄
×	×	1	0	0	1
×	×	0	1	1	0
×	×	1	1	1	1

NO CHANGE

X-DON'T CARE
τ-LEVEL CHANGE

— VC2520 —

Chroma Enhancer

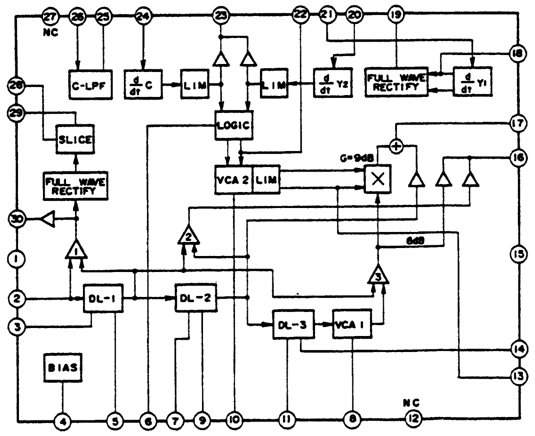
27
NC
26
25
24
23
22
21
20
19
18
28
29
C-LPF
d/dt C
LIM
LIM
d/dt Y2
FULL WAVE RECTIFY
d/dt Y1
LOGIC
SLICE
17
16
FULL WAVE RECTIFY
VCA 2
LIM
G=9dB
30
2
6dB
1
15
1
3
DL-1
DL-2
2
3
DL-3
VCA 1
14
13
BIAS
NC
4
5
6
7
9
10
11
8
12

— VC2054 —

Real time Counter

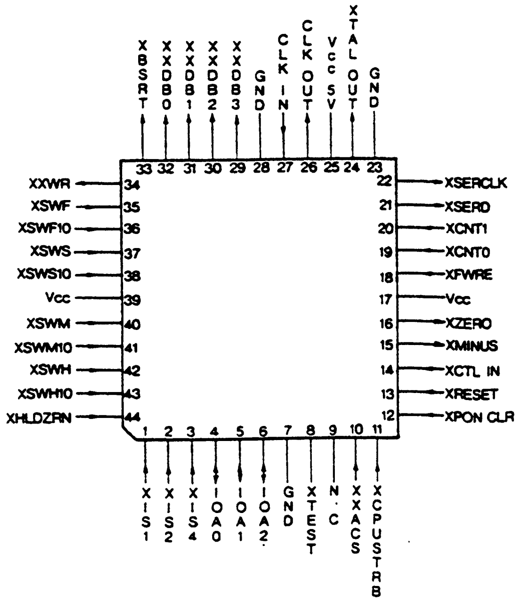
XBSRT
XXDB0
XXDB1
XXDB2
XXDB3
GND
CLK IN
CLK OUT
Vcc 5V
XTAL OUT
GND
33
32
31
30
29
28
27
26
25
24
23
XXWR 34
XSWF 35
XSWF10 36
XSWS 37
XSWS10 38
Vcc 39
XSWM 40
XSWM10 41
XSWH 42
XSWH10 43
XHLDZRN 44
22 XSERCLK
21 XSERD
20 XCNT1
19 XCNT0
18 XFWRE
17 Vcc
16 XZERO
15 XMINUS
14 XCTL IN
13 XRESET
12 XPON CLR
1
2
3
4
5
6
7
8
9
10
11
XIS1
XIS2
XIS4
IOA0
IOA1
IOA2
GND
XTEST
N.C
XXACS
XCPUSTRB

PIN NO.	IN/OUT	PIN NAME	DESCRIPTION
1. CLOCK SIGNAL			
27	I	CKIN	CLOCK IN
26	O	XCKO	CLOCK OUT
24	O	XTALO	X'TAL OUT
2. SYSTEM CONTROL SIGNAL			
12	I	PCLR	POWER ON CLR
1	I	IS1	SIGNAL FORMAT SELECT S1
2	I	IS2	SIGNAL FORMAT SELECT S2
3	I	IS4	SIGNAL FORMAT SELECT S4

S1	S2	S4	SIGNAL NAME	SYSTEM
H	H	H	NTSC DROP FRAME	525/60
L	H	H	NTSC NON DROP FRAME	525/60
L	L	H	PAL, SECAM	625/50
L	L	L	FILM	655/48

PIN NO.	IN/OUT	PIN NAME	DESCRIPTION
44	I	RUHO	RUN OR HOLD MODE SELECT IN
35	I	SWFR	FRAME PRESET SW
36	I	SWFT	10 FRAME PRESET SW
37	I	SWSC	SECOND PRESET SW
38	I	SWST	10 SECOND PRESET SW
40	I	SWMN	MINUTE PRESET SW
41	I	SWMT	10 MINUTE PRESET SW
42	I	SWHR	HOUR PRESET SW
43	I	SWHT	10 HOUR PRESET SW
19	I	CNT0	COUNTER MIDE SELECT 0
20	I	CNT1	COUNTER MIDE SELECT 1

CNT0	CNT1	MODE
H	H	24H COUNT
H	L	10H COUNT
L	L	WATCH

Specifications other than the above are not defined.

PIN NO.	IN/OUT	PIN NAME	DESCRIPTION
3. CTL SIGNAL			
14	I	CTLI	CTL SIGNAL IN
18	I	FRE	CTL DIRECTION SIGNAL IN
13	I	RESET	CTL RESET IN
4. DATA OUTPUT & OUTPUT CONTROL SIGNAL			
4	I, O	AD0	ADRESS DATA IN/OUT
5	I, O	AD1	
6	I, O	AD2	
10	I	XACS	ADRESS LINE OUTPUT ENABLE
32	O	XDO0	DATA OUT
31	O	XDO1	
30	O	XDO2	
29	O	XDO3	
34	O	XWR	WRITE SIGNAL OUT (NEGATIVE LOGIC)
11	I	CPURDZ	CPU READ SIGNAL IN (NEGATIVE LOGIC)
33	O	BSRT	BUSY REAL TIME COUNTER
21	O	RTSDTO	REAL TIME DATA OUT
22	O	RTSCKO	REAL TIME SERIAL CLOCK OUT
16	O	ZFLG	ZERO FLAG OUT
15	O	MFLG	MINUS FLAG OUT

SECTION 5
EXPLODED VIEWS AND PARTS LIST

SAFETY PRECAUTION

Parts identified by the ⚠ symbol are critical for safety. Replace only with specified part numbers.

NOTE: "X " indicates quantity per set.

5.1 EXPLODED VIEWS AND PARTS LIST

5.1.1 Packing assembly <M1> 5-2
5.1.2 Cabinet assembly <M2> 5-4
5.1.3 Chassis assembly <M3> 5-6
5.1.4 Frame assembly <M4> 5-8
5.1.5 Rear frame assembly <M5> 5-10
5.1.6 Mechanism-1 assembly <M6> 5-12
5.1.7 Mechanism-2 assembly <M7> 5-14
5.1.8 Cassette housing assembly <M8> 5-16
5.1.9 Drum assembly <M9> 5-18
5.1.10 Front panel assembly <MA> <MB> 5-18

5.1 EXPLODED VIEWS AND PARTS LIST

5.1.1 Packing assembly <M1>

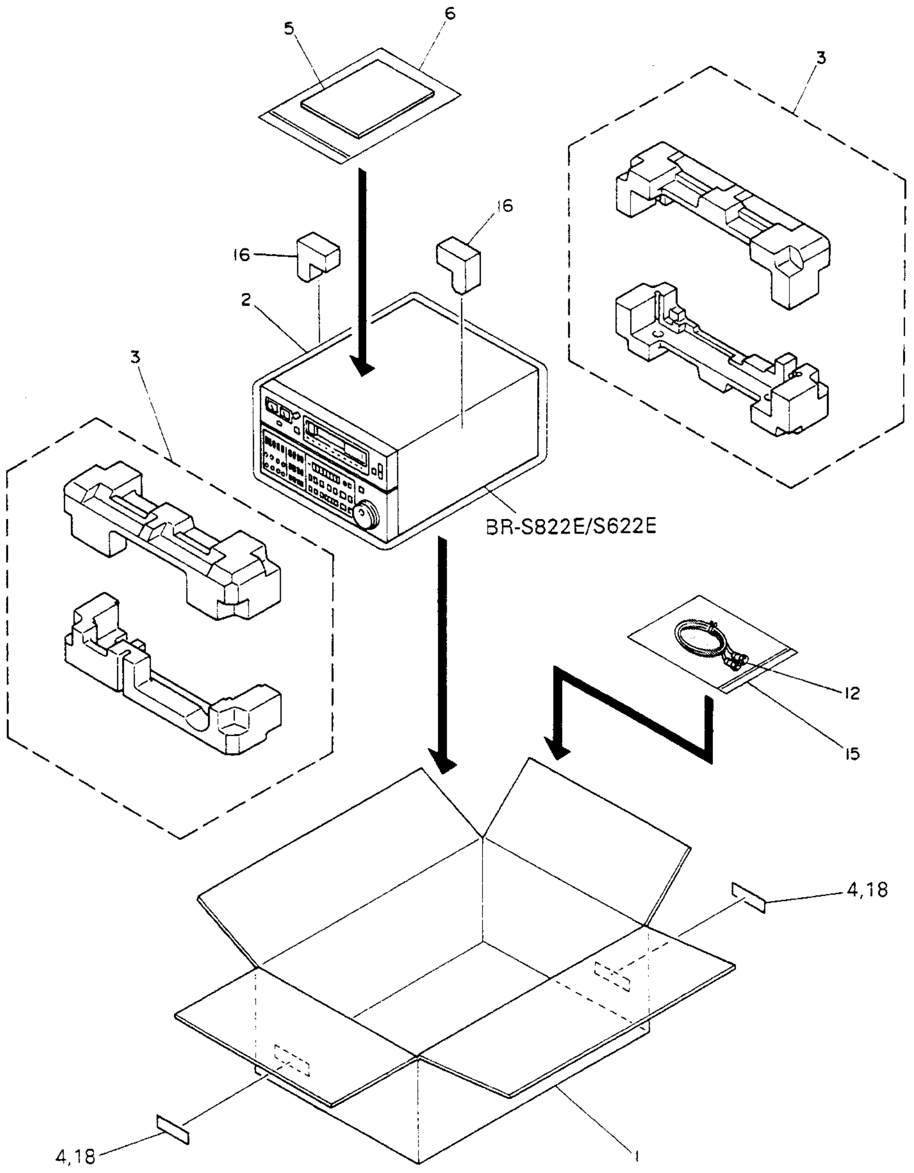

PACKING ASSEMBLY M1

M 1 M M ☐☐☐☐

⚠ REF No.	PART No.	PART NAME, DESCRIPTION
1	PRD20370-09	PACKING CASE, BR-S822E
	PRD20370-10	PACKING CASE, BR-S622E
2	PGD30005-05	PE BAG
3	PRD10251A-02	CUSHION ASSY
4	PUP40619	SERIAL NO.STICKER, ×2
⚠ 5	PGD30002-283-01	INSTRUCTIONS, BR-S822E
⚠	PGD30002-284	INSTRUCTIONS, BR-S622E
6	QPGB024-03404	POLY BAG
12	PGZ00793-006	CABLE ASSY, BR-S822E
15	QPGB020-02804	POLY BAG
16	PRD30848	SPACER CUSHION, ×2
18	PRD43892-04	PACKING LABEL, ×2

•Initial setting of front and rear panel switches at shipment

— FRONT PANEL —

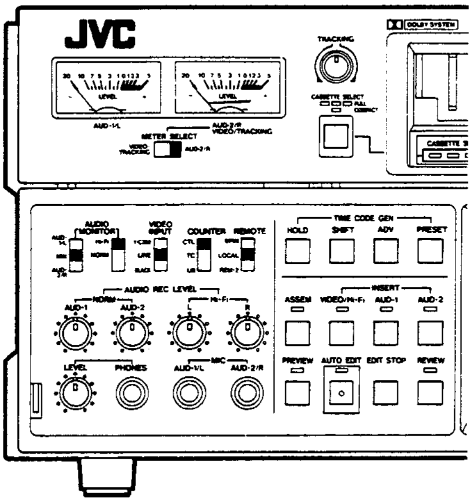
JVC
DOLBY SYSTEM
TRACKING
20 10 7 5 3 1 0 1 2 3 5
LEVEL
AUD-1/L
AUD-2/R
VIDEO/TRACKING
METER SELECT
VIDEO TRACKING
AUD-2/R
CASSETTE SELECT
FULL
COMPACT
CASSETTE S
AUDIO MONITOR
AUD-1/L
MIX
AUD-2/R
Hi-Fi
NORM
VIDEO INPUT
Y/C358
LINE
BLACK
COUNTER
CTL
TC
UB
REMOTE
9PIN
LOCAL
REM-2
TIME CODE GEN
HOLD
SHIFT
ADV
PRESET
AUDIO REC LEVEL
NORM
AUD-1
AUD-2
Hi-Fi
L
R
INSERT
ASSEM
VIDEO/Hi-Fi
AUD-1
AUD-2
LEVEL
PHONES
MIC
AUD-1/L
AUD-2/R
PREVIEW
AUTO EDIT
EDIT STOP
REVIEW

— FRONT SUB PANEL —

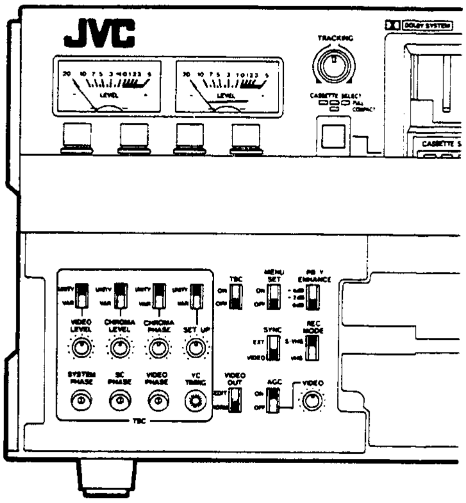
JVC
DOLBY SYSTEM
TRACKING
20 10 7 5 3 1 0 1 2 3 5
LEVEL
CASSETTE SELECT
FULL
COMPACT
CASSETTE S
UNITY
VAR
VIDEO LEVEL
CHROMA LEVEL
CHROMA PHASE
SET UP
SYSTEM PHASE
SC PHASE
VIDEO PHASE
YC TIMING
TBC
ON
OFF
MENU SET
PB Y ENHANCE
-6dB
-3dB
0dB
SYNC
EXT
VIDEO
REC MODE
S-VHS
VHS
VIDEO OUT
EDIT
NORM
AGC
VIDEO

— REAR PANEL —

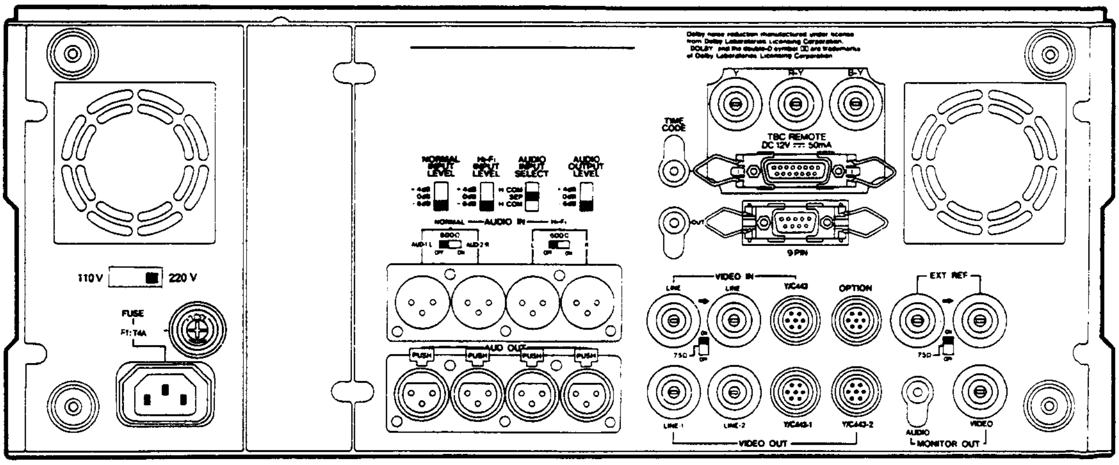
110V
220V
FUSE
F1: T4A
NORMAL INPUT LEVEL
Hi-Fi INPUT LEVEL
AUDIO INPUT SELECT
AUDIO OUTPUT LEVEL
+4dB
0dB
-6dB
H COM
SEP
H COM
NORMAL
AUDIO IN
Hi-Fi
600Ω
AUD-1 L
AUD-2 R
OFF
ON
AUD OUT
PUSH
Dolby noise reduction manufactured under license from Dolby Laboratories Licensing Corporation.
DOLBY and the double-D symbol are trademarks of Dolby Laboratories Licensing Corporation.
Y
R-Y
B-Y
TIME CODE
TBC REMOTE
DC 12V ⎓ 50mA
OUT
9 PIN
VIDEO IN
LINE
Y/C443
OPTION
EXT REF
75Ω
ON
OFF
LINE-1
LINE-2
Y/C443-1
Y/C443-2
VIDEO OUT
AUDIO
VIDEO
MONITOR OUT

5.1.2 Cabinet assembly <M2>

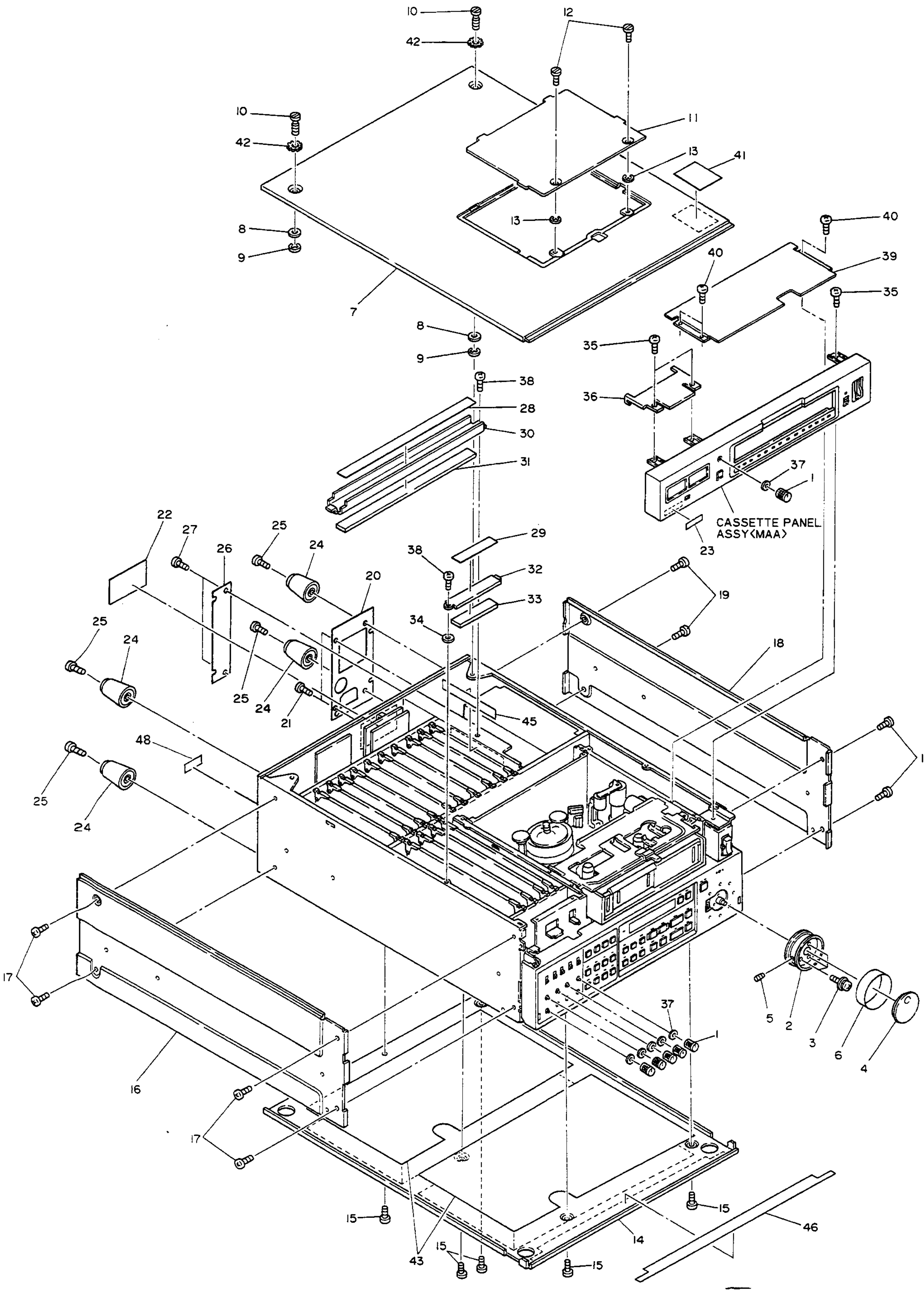
10
12
42
10
42
11
13
41
13
8
9
7
40
39
40
35
8
9
35
38
28
36
30
31
37
1
CASSETTE PANEL
ASSY<MAA>
23
22
27
25
26
24
29
38
32
20
33
25
34
24
19
18
25
24
25
24
21
45
48
19
25
24
17
16
37
1
5
2
3
6
4
17
15
15
46
14
43
15
15

CABINET ASSEMBLY M 2

M 2 M M ☐ ☐ ☐ ☐

⚠	REF No.	PART No.	PART NAME, DESCRIPTION
	1	PRD43431A	VR KNOB ASSY, ×6
	2	PRD30196-03	SEARCH KNOB
	3	DPSP2006Z	SCREW, ×3
	4	PRD41819B	JOG KNOB ASSY
	5	YWS3004B	SET SCREW
	6	PRD41818	TIRE
	7	PRD10247A-02	TOP COVER ASSY
	8	PGD40255-02	SPACER, ×2
	9	REE3000	"E" RING, ×2
	10	PRD30088-02	COIN SCREW, ×2
	11	PRD30841	COVER
	12	PRD30088	COIN SCREW, ×2
	13	REE2500	"E" RING, ×2
⚠	14	PRD10232-01-03	BOTTOM COVER
	15	SDST3008Z	SCREW, ×5
⚠	16	PRD10233-01-02	LEFT SIDE COVER
	17	SDSP4008R	SCREW, ×4
⚠	18	PRD10234-01-02	RIGHT SIDE COVER
	19	SDSP4008R	SCREW, ×4
⚠	20	PRD30730-03	REAR PANEL(B)
	21	SDSP3006M	SCREW, ×2
⚠	22	PRD30085-05	RATING LABEL, BR-S822E
⚠		PRD30085-06	RATING LABEL, BR-S622E
	23	PQ40111-1-5	SERIAL NO PLATE
	24	QZF2319-001	FOOT, ×4
	25	SDSP4018M	SCREW, ×4
⚠	26	PRD43423-01-02	REAR PANEL(C)
	27	SDSP3006M	SCREW, ×2
	28	PRD30802-02	BOARD LABEL(A)
	29	PRD43611-02	BOARD LABEL(B)
	30	PRD30840-01-02	BOARD HOLDER(A)
	31	PRD30030-64	PAD
	32	PRD43460	BOARD HOLDER(B)
	33	PRD30030-54	PAD
	34	PQM30017-23	SLIT WASHER
	35	SDST3008Z	SCREW, ×3
	36	PRD30835	TOP PLATE(L)
	37	PGD40292	FELT WASHER, ×6
	38	SBST3006Z	SCREW, ×2
	39	PRD20412	HOUSING COVER
	40	SBST3006Z	SCREW, ×4
	41	PGD41496-05	LABEL
	42	WBS4000N	WASHER, ×2
	43	PRD30858	SHEET, ×2
	46	PRD30861	SPACER
⚠	48	PGD41228	CAUTION LABEL

5.1.3 Chassis assembly <M3>

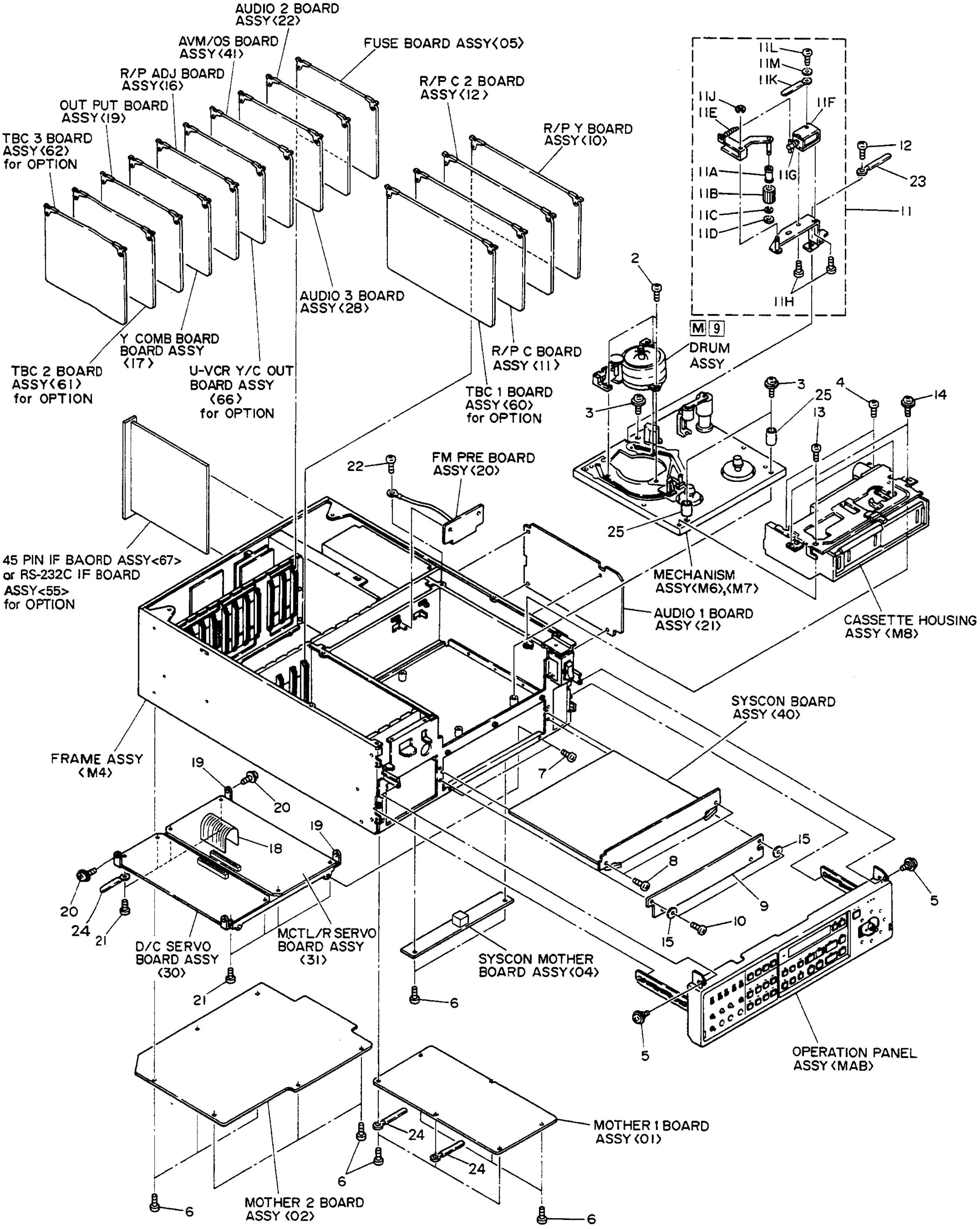

AUDIO 2 BOARD ASSY<22>
AVM/OS BOARD ASSY<41>
FUSE BOARD ASSY<05>
R/P ADJ BOARD ASSY<16>
OUT PUT BOARD ASSY<19>
TBC 3 BOARD ASSY<62> for OPTION
R/P C 2 BOARD ASSY<12>
R/P Y BOARD ASSY<10>
11L
11M
11K
11J
11E
11F
12
23
11A
11G
11B
11C
11D
11
11H
2
M 9
DRUM ASSY
AUDIO 3 BOARD ASSY<28>
Y COMB BOARD BOARD ASSY <17>
TBC 2 BOARD ASSY<61> for OPTION
U-VCR Y/C OUT BOARD ASSY <66> for OPTION
R/P C BOARD ASSY<11>
TBC 1 BOARD ASSY<60> for OPTION
3
3
4
25
14
13
22
FM PRE BOARD ASSY<20>
25
45 PIN IF BAORD ASSY<67> or RS-232C IF BOARD ASSY<55> for OPTION
MECHANISM ASSY<M6>,<M7>
AUDIO 1 BOARD ASSY<21>
CASSETTE HOUSING ASSY<M8>
SYSCON BOARD ASSY<40>
FRAME ASSY <M4>
19
20
7
19
18
15
8
9
5
20
24
21
10
15
D/C SERVO BOARD ASSY <30>
MCTL/R SERVO BOARD ASSY <31>
SYSCON MOTHER BOARD ASSY<04>
21
6
5
OPERATION PANEL ASSY<MAB>
24
MOTHER 1 BOARD ASSY<01>
24
6
6
MOTHER 2 BOARD ASSY<02>
6

CHASSIS ASSEMBLY M3

M 3 M M ☐ ☐ ☐ ☐

⚠ REF No.	PART No.	PART NAME, DESCRIPTION
2	LPSP2612Z	SCREW, ×3
3	LPSP4016Z	SCREW, ×3
4	SDSP2604M	SCREW, ×2
5	PRD30082	FLANGE SCREW, ×2
6	GBST3006Z	SCREW, ×14
7	SDSP3006M	SCREW, ×2
8	SDSP3006M	SCREW, ×2
9	PRD30767	COVER
10	PRD43457-01-01	SPECIAL SCREW, ×2
11	PRD30797A-03	HEAD CLEANER ASSY
11A	PRD42664	CLEANER HOLDER
11B	PRD40510-01-02	CLEANER
11C	Q03093-829	WASHER
11D	PQM30017	SLIT WASHER
11E	PRD30024-62	TENSION SPRING
⚠ 11F	PU59401-2	SOLENOID
11G	PRD30023-36	COMPRESSION SPRING
11H	SPSP2003Z	SCREW, ×2
11J	REE2500	"E" RING
11K	PU49485-3	WIRE CLAMP
11L	SPSP2003Z	SCREW
12	PRD30027-04	SCREW
13	SDSP2608Z	SCREW, ×2
14	GBST3008Z	FLANGE SCREW, ×2
15	Q03093-517	WASHER, ×2
18	PGW0205-030100	FLAT WIRE
19	PRD30762-01-01	BOARD BRACKET, ×2
20	PRD30082	FLANGE SCREW, ×2
21	GBST3006Z	SCREW, ×8
22	SBST3006Z	SCREW
23	PU49485-4	WIRE CLAMP
24	PU49486	WIRE CLAMP, ×2
25	PRD44048	COLLAR, ×2

5.1.4 Frame assembly <M4>

M4MM☐☐☐☐

⚠	REF No.	PART No.	PART NAME, DESCRIPTION
	1	PRD20354A-06	MECHA HOLDER ASSY
	1A	PU49485-4	WIRE CLAMP
	1B	SBST3006Z	SCREW
	2	PRD20374A-05	LEFT STAY ASSY
	2A	PGZ00493-03	GUIDE RAIL
	2B	PU49881	EDGE COVER
	2C	PU43147-3	WIRE SADDLE, ×2
	2D	PRD30030-70	PAD
	3	PRD20375A-06	RIGHT STAY ASSY
	3A	PGZ00493-03	GUIDE RAIL
	3B	PU49881	EDGE COVER
	3C	PGZ00605	BOARD SPACER, ×2
	3D	PGZ00606	BOARD HOLDER, ×2
	3E	PU43147-3	WIRE SADDLE, ×2
	4	PRD20378A-01	CENTER BRACKET ASSY
	4A	PU55353-2	W.LOCKING SPACE, ×2
	5	PRD20366A-06	CENTER FRAME ASSY
	5A	PU43172-9-120	NYLON GROMMET
	5B	PGZ00452-02	WIRE CLAMP, ×4
	5C	PU43172-9-65	NYLON GROMMET
	5D	PGZ00493-02	GUIDE RAIL, ×14
	6	SBST3006Z	SCREW, ×62
	7	PRD20376A-01	GUIDE FRAME ASSY
	7A	PGZ00493-03	GUIDE RAIL
	8	PRD20377A-03	POWER FRAME ASSY
	8A	PGZ00493-03	GUIDE RAIL
	8B	PU43135-1-100	NYLON EDGGING
	9	PRD20367A-03	REAR FRAME(C)ASSY
	9A	PGZ00493-02	GUIDE RAIL, ×10
	10	PRD10237-01-03	LEFT SIDE FRAME
	11	PRD10273A-01	RIGHT SIDE FRAME ASSY
	11A	PU43153-1-200	NYLON EDGGING
	12	PRD10248A-04	FRONT FRAME ASSY
	12A	PU43172-9-89	NYLON GROMMET
	13	SPST3006M	SCREW, ×4
	14	PRD30736-03-03	SUB PANEL(A)
	15	PRD43433	SUB PANEL(B)
	16	PRD30739-01-04	POWER SW BRACKET
	17	PRD43708	TOP PLATE(R)
	18	PRD30743A-01	FRONT BRACKET ASSY
	18A	PGZ00493-02	GUIDE RAIL, ×4
	19	PRD43816	FOOT, ×4
	20	SBST3010Z	SCREW, ×4
⚠	21	PGZ01652	SWITCHING REGURATOR
	22	DPSP4008Z	ASSY SCREW, ×2
	23	LPSP3006Z	ASSY SCREW, ×2
	24	GBST3006Z	SCREW, ×3
⚠	25	QSE2A21-L01	POWER SWITCH
⚠	26	PRD42023	SW COVER
	27	PRD30836	CONNECTOR STAY
	28	PRD43700	CORNER BRACKET, ×3
	29	PRD43709-02	BRACKET
	30	PRD43709	BRACKET
⚠	31	PRD30857	INSULATOR
	33	PU49486	WIRE CLAMP
	34	PU59311	WIRE CLAMP, ×3(Incl. by 21)
	35	PU49485-2	WIRE CLAMP
⚠	37	PU54551	CAUTION LABEL
	38	PGZ01726	CAP

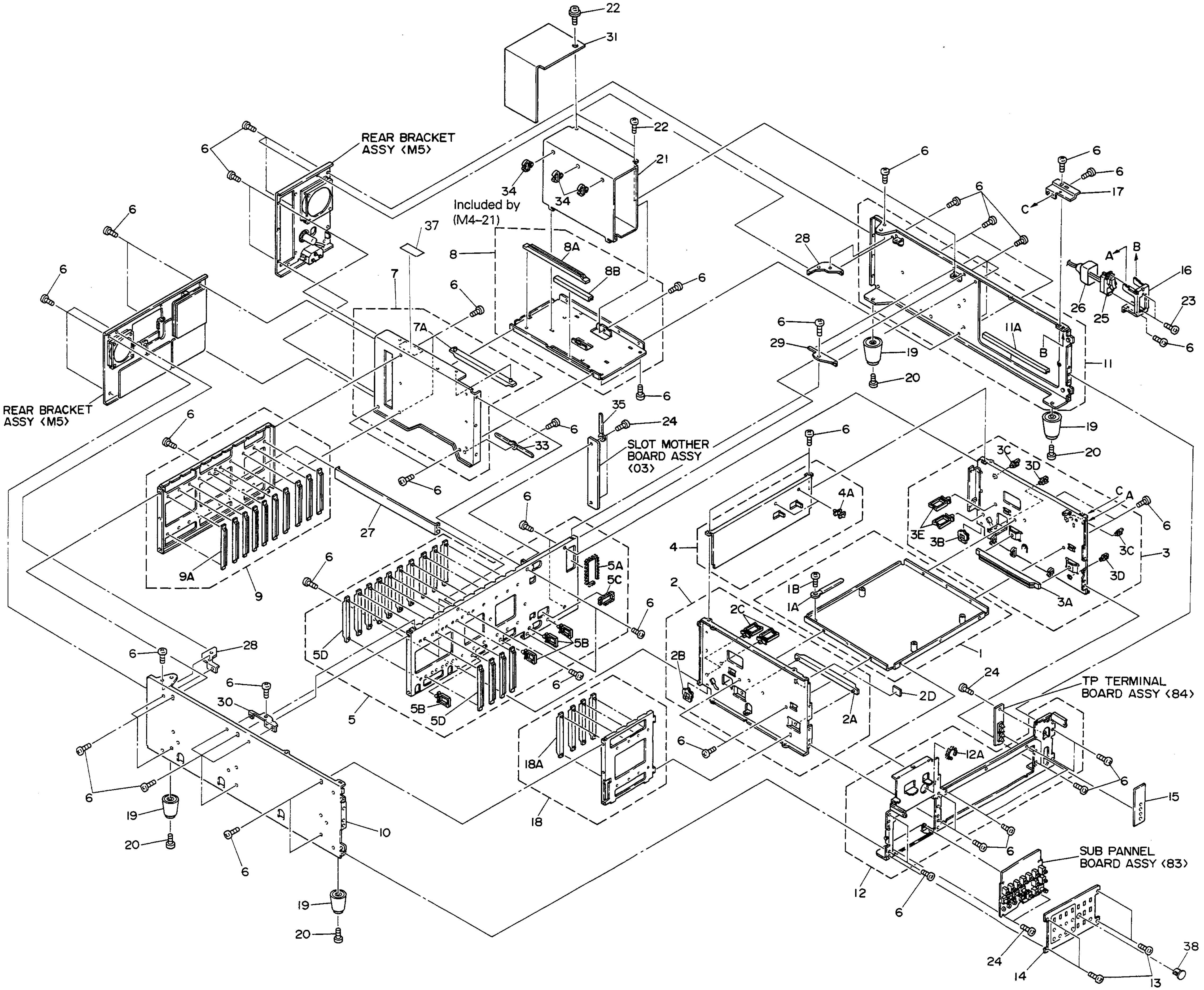
22
31
22
21
34
34
REAR BRACKET
ASSY <M5>
6
37
Included by
(M4-21)
8
8A
8B
7
7A
6
REAR BRACKET
ASSY <M5>
33
35
24
SLOT MOTHER
BOARD ASSY
<03>
27
9
9A
5
5A
5B
5C
5D
28
29
19
20
17
16
23
25
26
A
B
C
11
11A
3
3A
3B
3C
3D
3E
4
4A
2
2A
2B
2C
2D
1
1A
1B
18
18A
10
30
12
12A
TP TERMINAL
BOARD ASSY <84>
15
SUB PANNEL
BOARD ASSY <83>
13
14
38

5.1.5 Rear frame assembly <M5>

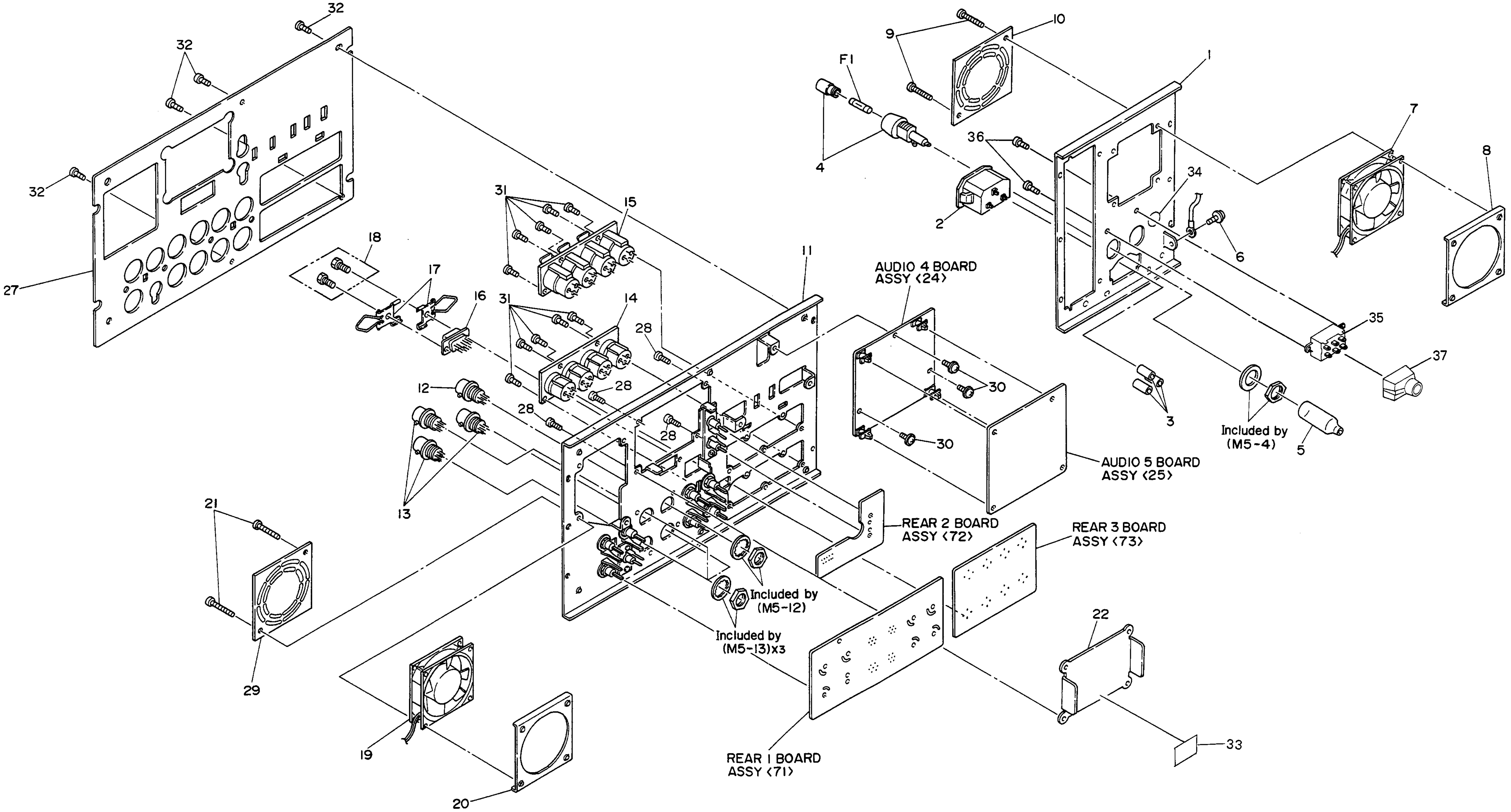
32
32
32
27
18
17
16
31
15
31
14
28
28
28
28
12
13
11
21
29
19
20
9
10
F1
4
36
2
1
34
6
7
8
35
37
3
Included by
(M5-4)
5
AUDIO 4 BOARD
ASSY <24>
30
30
30
AUDIO 5 BOARD
ASSY <25>
REAR 2 BOARD
ASSY <72>
REAR 3 BOARD
ASSY <73>
Included by
(M5-12)
Included by
(M5-13)x3
22
33
REAR 1 BOARD
ASSY <71>

REAR FRAME ASSEMBLY M5

M 5 M M ☐ ☐ ☐ ☐

⚠ REF No.	PART No.	PART NAME, DESCRIPTION	
1	PRD20365-01-04	REAR FRAME(B)	
⚠ 2	PGZ00760	AC INLET	
3	QXT695H-025	NYLON TUBE	
⚠ 4	QMG0301-004	FUSE HOLDER	
⚠ 5	PU50316	FUSE COVER	
⚠ 6	DPSP4008N	SCREW	
⚠ 7	PGZ01137	FAN MOTOR	
8	PRD43419-01-01	FAN MOTOR BRACKET	
9	SDSP3025M	SCREW, ×2	
10	PRD43465-01-01	FAN GUARD	
11	PGZ01822	REAR FRAME(A) ASSY	
12	PGZ00592	7P CONNECTOR(IN),	Incl. by 11
13	PGZ00593	7P CONNECTOR(OUT),X3	Incl. by 11
14	PGZ01208	XLR CONNECTOR(MALE)	
15	PGZ01209	XLR CONNECTOR(FEMALE)	
16	PGZ00915	9P CONNECTOR(REMOTE)	Incl. by 11
17	PGZ00924	SPRING LOCK, ×2	Incl. by 11
18	PGZ00925	SCREW(2 IN 1)	Incl. by 11
⚠ 19	PGZ01137	FAN MOTOR	
20	PRD43419-01-01	FAN MOTOR BRACKET	
21	SDSP3025M	SCREW, ×2	
⚠ 22	PRD43424-01-03	REAR PANEL(D)	
⚠ 27	PRD30729-05	REAR PANEL(A)	
28	SDSP3006M	SCREW, ×8	
29	PRD43465-01-01	FAN GUARD	
30	GBST3006Z	SCREW, ×3	
31	SDSP2605N	SCREW, ×10	
32	SDSP3008M	SCREW, ×4	
33	PGZ01086	FLAT CABLE CLIP	
⚠ 34	PU44457	STICKER	
⚠ 35	PGZ01701	VOLTAGE SELECTOR	
36	SDSF2608M	SCREW, ×2	
37	PRD42023	SW COVER	
⚠ F1	QMF51E2-4R0	FUSE	T4.0A

5.1.6 Mechanism-1 assembly <M6>

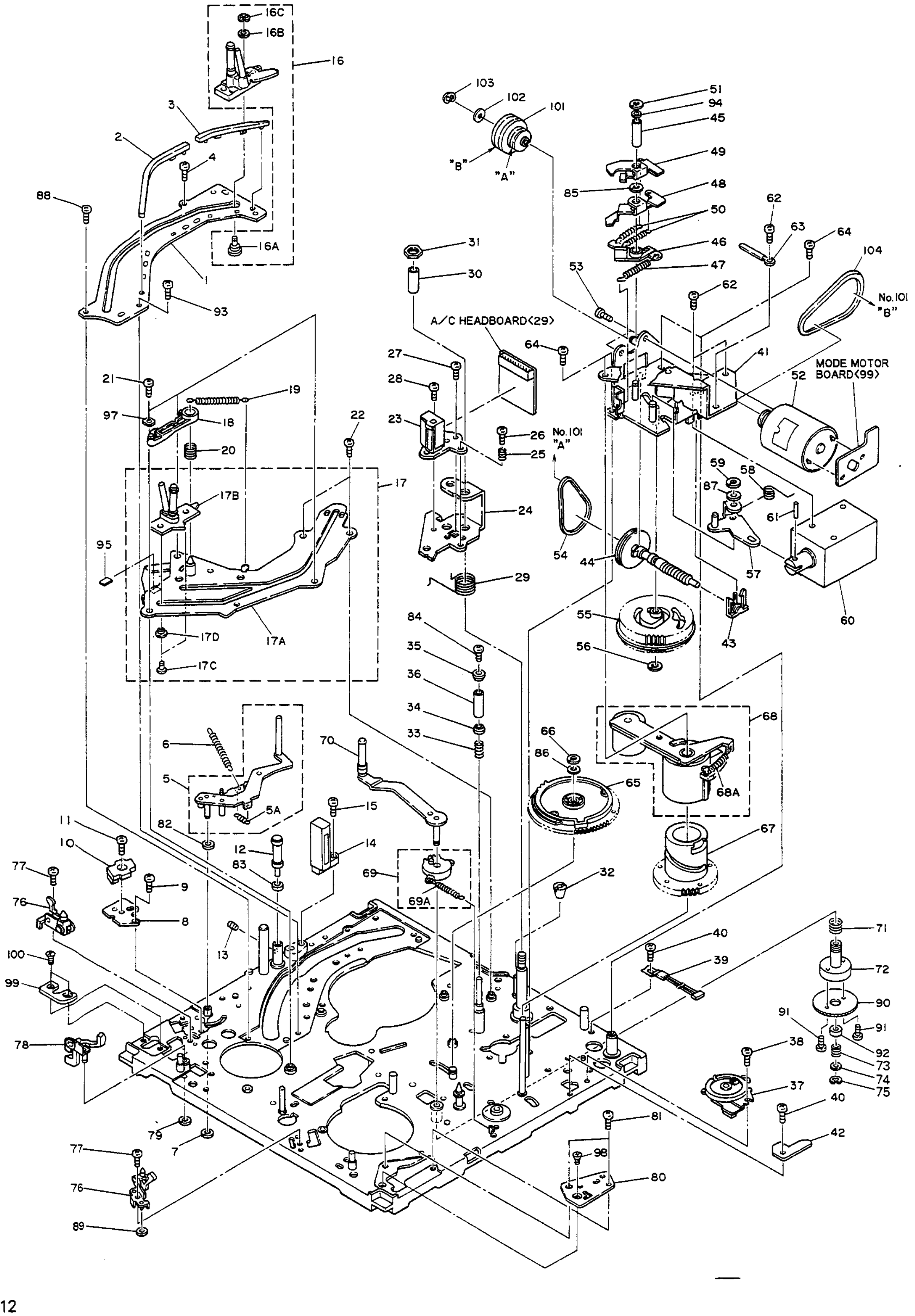
16C
16B
16
3
2
4
88
16A
1
93
103
102
101
"B"
"A"
51
94
45
49
85
48
50
62
63
64
104
46
47
53
62
No.101 "B"
31
30
A/C HEADBOARD<29>
64
41
MODE MOTOR BOARD<99>
52
27
28
23
26
25
No.101 "A"
21
19
97
18
20
22
17
17B
24
59
58
87
61
95
54
44
57
60
29
17A
17D
17C
84
55
43
35
56
36
34
68
33
66
6
70
86
65
5
5A
68A
11
82
15
10
12
14
67
77
83
9
69
32
76
8
69A
13
71
40
100
39
72
99
90
91
91
38
78
92
73
37
74
75
40
79
7
81
42
77
98
76
80
89

MECHANISM 1 ASSEMBLY M 6

M 6 M M □□□□

⚠ REF No.	PART No.	PART NAME, DESCRIPTION
1	PRD30764-01-05	SUB DECK, SUPPLY
2	PQ33995	GUIDE RAIL 2, SUPPLY
3	PQ33994	GUIDE RAIL 1, SUPPLY
4	SDSP2604Z	SCREW
5	PRD44024A	TENSION ARM ASSY
5A	PRD30024-65	TENSION SPRING
6	PRD43714	TENSION SPRING
7	PQM30017	SLIT WASHER
8	PRD43466-01-02	TENSION SENSOR BASE
9	SDSP2003Z	SCREW
10	PU61338	TENSION SENSOR
11	SDSP2604Z	SCREW
12	PRD43721A	GUIDE ROLLER ASSY
13	YFS2603B	SET SCREW
14	PU60616	FULL ERASE HEAD
15	SDSP2608Z	SCREW
16	PRD30821B	POLE BASE ASSY, SUPPLY
16A	PRD43671-01-02	STOPPER(S2)
16B	Q03093-829	WASHER
16C	REE1500	"E" RING
17	PRD43747A-05	LOADING ASSY, TAKE-UP
17A	PRD43746A-03	GUIDE RAIL ASSY, TAKE-UP
17B	PRD30864A-01	POLE BASE ASSY, TAKE-UP
17C	PRD43819	STOPPER(T), ×2
17D	PRD43875	COLLAR
18	PQ34000	C.GUIDE ARM
19	PQM30001-317	TENSION SPRING
20	PQM30002-207	COMPRESSION SPRING
21	SDSP2604Z	SCREW, ×3
22	SDSP2608M	SCREW, ×2
23	PGZ01536A	AUDIO／CONTROL HEAD
24	PQ34008	HEAD ARM
25	PQM30002-197	COMPRESSION SPRING
26	SDSP2612Z	SCREW
27	PQ44621	SPECIAL SCREW
28	PQ43687B	SPECIAL SCREW
29	PQ44119	TORSION SPRING
30	PQ44541	SPACER
31	PQ44630	NYLON NUT
32	PQ45181	TAPER NUT
33	PRD30023-45	COMPRESSION SPRING
34	PRD43670-01-01	TAPE GUARD
35	PRD43732	GUIDE FLANGE
36	PRD43733	TAPE GUIDE
37	PU61339	ROTARY ENCORDER
38	SDSP2004Z	SCREW
39	PU61357	DEW SENSOR
40	SDSP2604Z	SCREW
41	PRD43380B	MOTOR BRACKET ASSY
42	PRD43745	SPACER
43	PQ44129	WORM BEARING 2
44	PRD44015A	WORM GEAR ASSY
45	PQ45278	COLLAR
46	PQ33992-1-1	LOCK LEVER 1
47	PQM30001-313	TENSION SPRING
48	PQ45279	LOCK LEVER 2
49	PQ33993-1-2	LOCK LEVER 3
50	PQM30001-314	TENSION SPRING, ×2
51	PQM30017-6	SLIT WASHER
52	PRD44016A	MODE MOTOR ASSY
53	SPSP3003Z	SCREW, ×2
54	PRD30022-16	BELT
55	PQ21313	CAM GEAR
56	PQM30017-12	SLIT WASHER
57	PRD43383A-02	SOLENOID LEVER ASSY
58	PRD43386	TORSION SPRING
59	PQM30017-12	SLIT WASHER
⚠ 60	PGZ01590	SOLENOID
61	PSE3010	SPRING PIN
62	DPSP3005Z	SCREW, ×3
63	PU49485-4	WIRE CLAMP
64	SDSP2604Z	SCREW, ×4
65	PQ21315-1-2	CONTROL CAM
66	PQM30017-28	SLIT WASHER
67	PQ21312	PINCH ROLLER CAM
68	PRD43387A-01	PINCH ROLLER ARM ASSY
	or PRD43387B-01	PINCH ROLLER ARM ASSY
68A	PRD30024-60	TENSION SPRING
69	PRD43791A-01	GUIDE ARM GEAR ASSY
69A	PRD30024-64	TENSION SPRING
70	PRD43404D	GUIDE ARM ROLLER ASSY
71	PRD30023-48	COMPRESSION SPRING
72	PRD43800	BUSHING
73	PRD30023-49	COMPRESSION SPRING
74	WSS3000Z	WASHER
75	REE2500	"E" RING
76	PRD43783B	GUIDE PIN ASSY, ×2
77	SDSP2604Z	SCREW, ×2
78	PQ45332A	REC SAFETY ASSY
79	PQM30017-6	SLIT WASHER
80	PRD43889	F-S.SW BASE
81	SDSP2604Z	SCREW, ×2
82	Q03093-838	WASHER
83	PQ45294	"O" RING
84	PRD43165	SPECIAL SCREW
85	Q03093-819	WASHER
86	Q03093-849	WASHER
87	Q03093-818	WASHER
88	SDSP2608M	SCREW
89	Q03093-831	WASHER
90	PRD43802	ADJUST GEAR
91	SPSP2004Z	SCREW, ×2
92	PRD43804	COLLAR
93	SPSH2635M	MINI SCREW
94	Q03093-819	WASHER
95	PRD43826	SPACER
97	PRD44013-02	STOPPER PLATE
98	SSSP2606Z	SCREW
99	PRD43890	SOCKET L
100	SSSP2606Z	SCREW, ×2
101	PRD43968	CONNECT PULLEY
102	Q03093-829	WASHER
103	REE1200	"E"RING
104	PRD30022-12	BELT

5.1.7 Mechanism-2 assembly <M7>

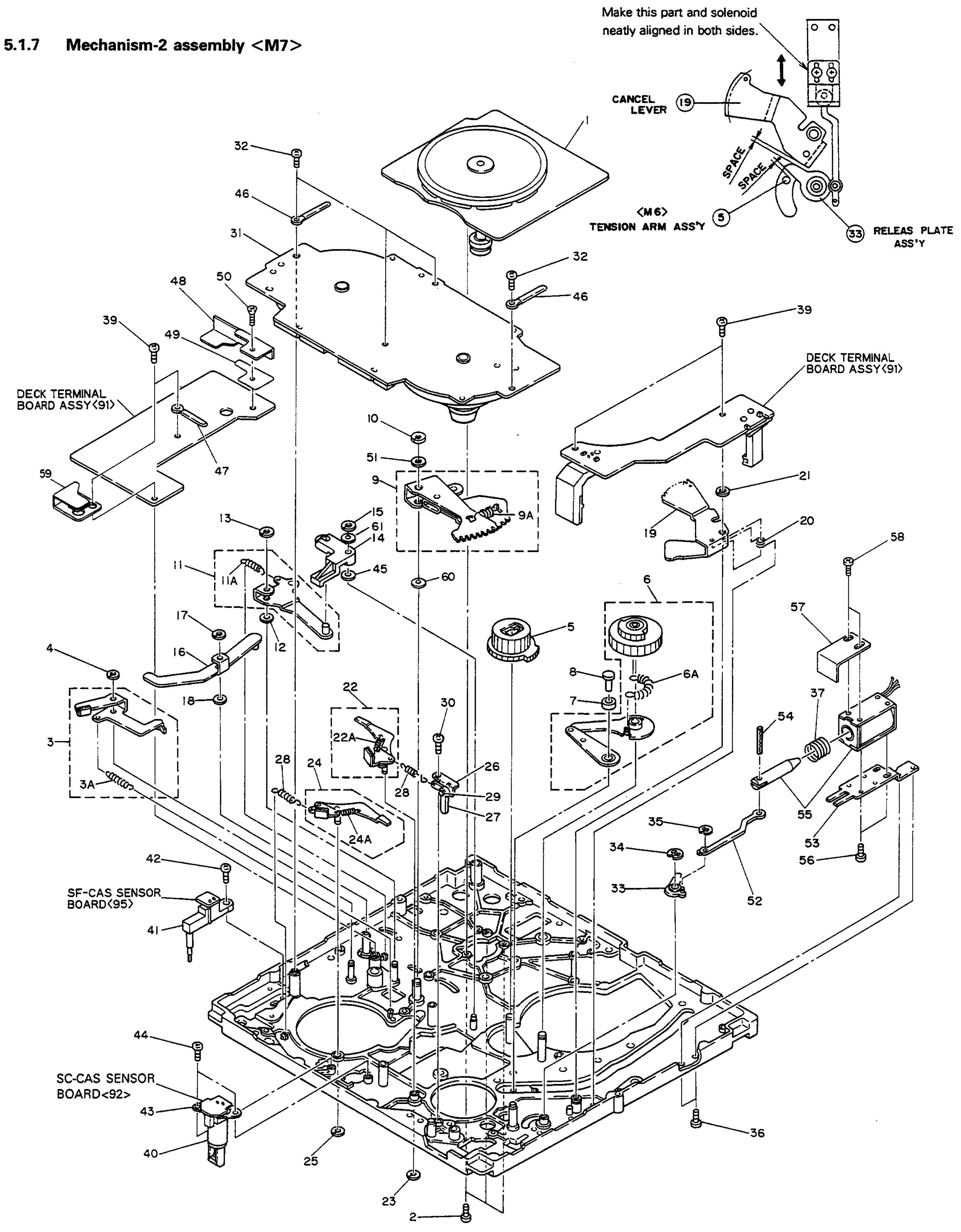
Make this part and solenoid neatly aligned in both sides.
CANCEL LEVER
19
SPACE
SPACE
<M6> TENSION ARM ASS'Y
5
33
RELEAS PLATE ASS'Y
1
32
46
31
48
50
39
49
DECK TERMINAL BOARD ASSY<91>
47
59
32
46
39
DECK TERMINAL BOARD ASSY<91>
10
51
9
9A
15
61
14
45
60
13
11
11A
12
17
16
4
18
3
3A
21
19
20
58
6
5
8
6A
7
57
37
54
55
53
56
22
22A
30
26
29
27
28
24
24A
28
35
34
33
52
42
SF-CAS SENSOR BOARD<95>
41
44
SC-CAS SENSOR BOARD<92>
43
40
25
23
2
36

MECHANISM 2 ASSEMBLY M7

M7MM☐☐☐☐

⚠ REF No.	PART No.	PART NAME, DESCRIPTION
⚠ 1	PGZ01535-01-01	CAPSTAN MOTOR
2	SDSP2608Z	SCREW, ×3
3	PRD43479A	REEL BRAKE ASSY
3A	PRD30024-58	TENSION SPRING
4	PQM30017-6	SLIT WASHER
5	PQ34033	LOADING GEAR, TAKE-UP
6	PRD43473A	LOADING GEAR ASSY, SUPPLY
6A	PQM30001-318	TENSION SPRING
7	PRD44019	COLLAR
8	PRD43818	STOPPER(S1)
9	PQ45306B-2	ARM GEAR ASSY
9A	PQM30001-320	TENSION SPRING
10	REE3000	"E" RING
11	PQ45304A	F.LOCK LEVER ASSY
11A	PQM30001-319	TENSION SPRING
12	Q03093-825	WASHER
13	PQM30017-6	SLIT WASHER
14	PQ34005-1-1	LOCK ARM
15	REE2500	"E" RING
16	PRD43464A	HOUSING LEVER ASSY
17	PQM30017-6	SLIT WASHER
18	Q03093-825	WASHER
19	PQ34007	CANCEL LEVER
20	PQ45313	TORSION SPRING
21	PQM30017-12	SLIT WASHER
22	PRD43388A	BRAKE LEVER(L)ASSY, SUPPLY
22A	PRD30024-53	TENSION SPRING
23	PQM30017-6	SLIT WASHER
24	PRD43395A	BRAKE LEVER(R) ASSY
24A	PRD30024-53	TENSION SPRING
25	PQM30017-6	SLIT WASHER
26	PRD43397A-01	LEVER BASE ASSY
27	PRD43400	F/C LEVER
28	PRD43401	TENSION SPRING, ×2
29	PQM30017-25	SLIT WASHER
30	SDSP2604Z	SCREW
⚠ 31	PGZ01541A-04	REEL MOTOR
32	SDSP2604Z	SCREW, ×4
33	PRD43485A	RELEASE PLATE ASSY
34	REE3000	"E" RING
35	REE1500	"E" RING
36	SDSP2608Z	SCREW, ×2
37	PRD30023-35	COMPRESSION SPRING
39	SDSP2604Z	SCREW, ×4
40	PU61174	CASSETTE SWITCH, (C-S)
41	PU61008	CASSETTE SWITCH, (F-S)
42	SDSP2605Z	SCREW
43	PRD43467-01-01	C.S.SW BASE
44	SDSP2603Z	SCREW, ×2
45	Q03093-825	WASHER
46	PU49485-4	WIRE CLAMP, ×2

⚠ REF No.	PART No.	PART NAME, DESCRIPTION
47	PU49485-4	WIRE CLAMP
48	PRD43982	PLATE
49	PRD43984	SHEET
50	SDSP2606Z	SCREW
51	Q03093-833	WASHER
52	PRD43487-01-01	CONNECTING PLATE
53	PRD43486	PLATE
54	PSE2516	SPRING PIN
⚠ 55	PGZ01623	SOLENOID
56	SPSP2603Z	SCREW, ×2
57	PRD43824	STOPPER
58	SPSH2628Z	MINI SCREW, ×2
59	PRD44006A	STOPPER ASSY
60	Q03093-832	WASHER
61	Q03093-831	WASHER

5.1.8 Cassette housing assembly <M8>

M8MM☐☐☐☐

⚠ REF No.	PART No.	PART NAME, DESCRIPTION
	PGS20745C-08	CASSETTE HOUSING ASSY
1	PQ34092A-02	CASSETTE HOLDER ASSY
2	PQ11278-01-01	SIDE HOLDER(R)
3	PQ45459	LID OPENER
4	PQ43596A-5	LOCK LEVER(R) ASSY
4A	PQ43597-1-5	TENSION SPRING
5	PQ11279	SIDE HOLDER(L)
6	PQ45539A	LOCK LEVER(L)ASSY
6A	PQ43597-2	TENSION SPRING
7	PQ21327A-09	HOLDER STAY ASSY
8	PQ11281-01-04	HOUSING STAY(R)
9	PQ34096	DOOR SENSOR
10	PQ34097	LID GUIDE
11	PQ45477	FC CHENGE LEVER
12	PQ34098	SENSOR LEVER
13	PQ34099	C INSERT LEVER
14	PQ45478	TORSION SPRING
15	PQ11282-01-05	HOUSING STAY(L)
16	PQ45479-01-01	DOOR STOPPER
17	PQ34100	DOOR OPENER
18	PQ11283-01-02	FRONT BRACKET
19	PQ45480A-02	DOOR LOCK(R)ASSY
19A	PQM30001-340	TENSION SPRING
20	PQ45481A-03	DOOR LOCK(L)ASSY
20A	PQM30001-340	TENSION SPRING
21	PQ45482	C DOOR LOCK
22	PQM30015-93	SHAFT
23	PQ45483-01-01	TORSION SPRING
24	PQ34103A-03	MAIN ARM ASSY
24A	PRD43806	TORSION SPRING
24B	PQ43605	TORSION SPRING
25	PQ34107A-02	DRIVE UNIT ASSY
25A	PQ45489A	MOTOR ASSY
25B	PQ45474	WORM GEAR
25C	PQ34109	CONNECT GEAR
25D	PQ34110-01-01	IDLER CAM
25E	SPSP3003Z	SCREW, ×2
26	PQ34111A-05	TOP FRAME ASSY
27	PQ34112A-01	HOLD PLATE ASSY
28	PQ45464	PIN
29	PQM30017-25	SLIT WASHER
30	PQ45493A	HOLD LEVER ASSY
31	PQ34128A-02	FC PLATE ASSY
31A	PQM30001-341	TENSION SPRING
32	PQ34114B-06	DOOR ASSY
32A	PQ45496-01-02	DOOR SHAFT
33	PRD44021	TORSION SPRING
34	SDSA2606Z	SCREW, ×3
35	SDSF2608Z	SCREW
36	SDSF2612Z	SCREW
37	PRD43729	BASE BRACKET
38	PRD43730	GEAR BRACKET
40	SDSP2603Z	SCREW
41	PRD43776-01-01	TEPHRON SHEET
42	PRD43776-02-01	TEPHRON SHEET
43	PRD30030-34	PAD
44	PRD30030-87	PAD
45	Q03093-828	WASHER
46	PRD30030-71	PAD
47	Q03093-826	WASHER
48	PRD30030-72	PAD
50	PRD30030-68	PAD, ×2

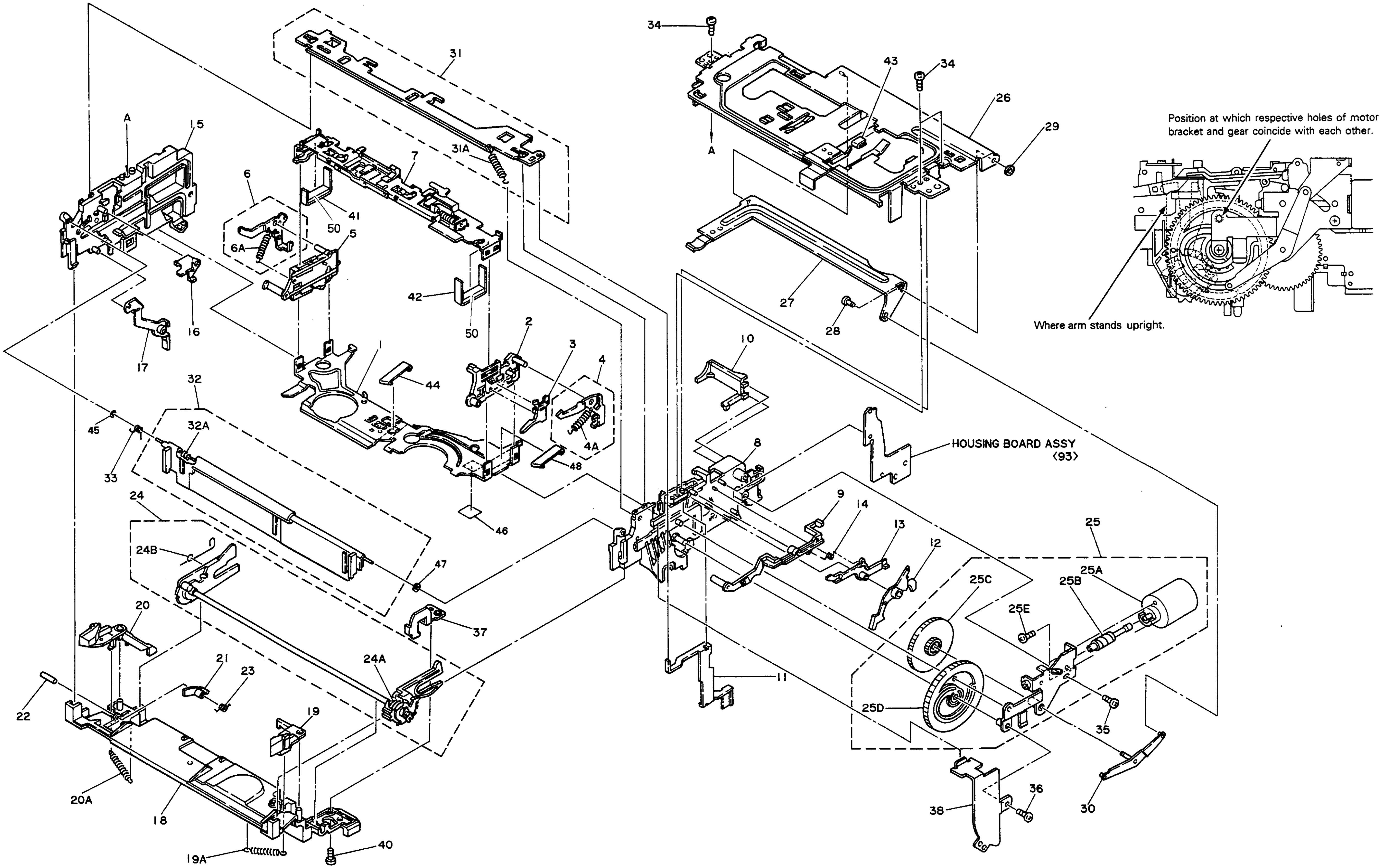
34
31
43
34
26
29
A
15
31A
A
7
6
41
50
5
6A
42
50
27
28
16
17
2
3
4
1
44
10
32
32A
45
33
4A
48
8
HOUSING BOARD ASSY
<93>
46
9
14
13
12
24
24B
47
25
25A
25B
25C
25E
20
37
21
23
24A
19
22
11
25D
35
20A
18
38
36
30
19A
40

Position at which respective holes of motor bracket and gear coincide with each other.

Where arm stands upright.

5.1.9 Drum assembly <M9>

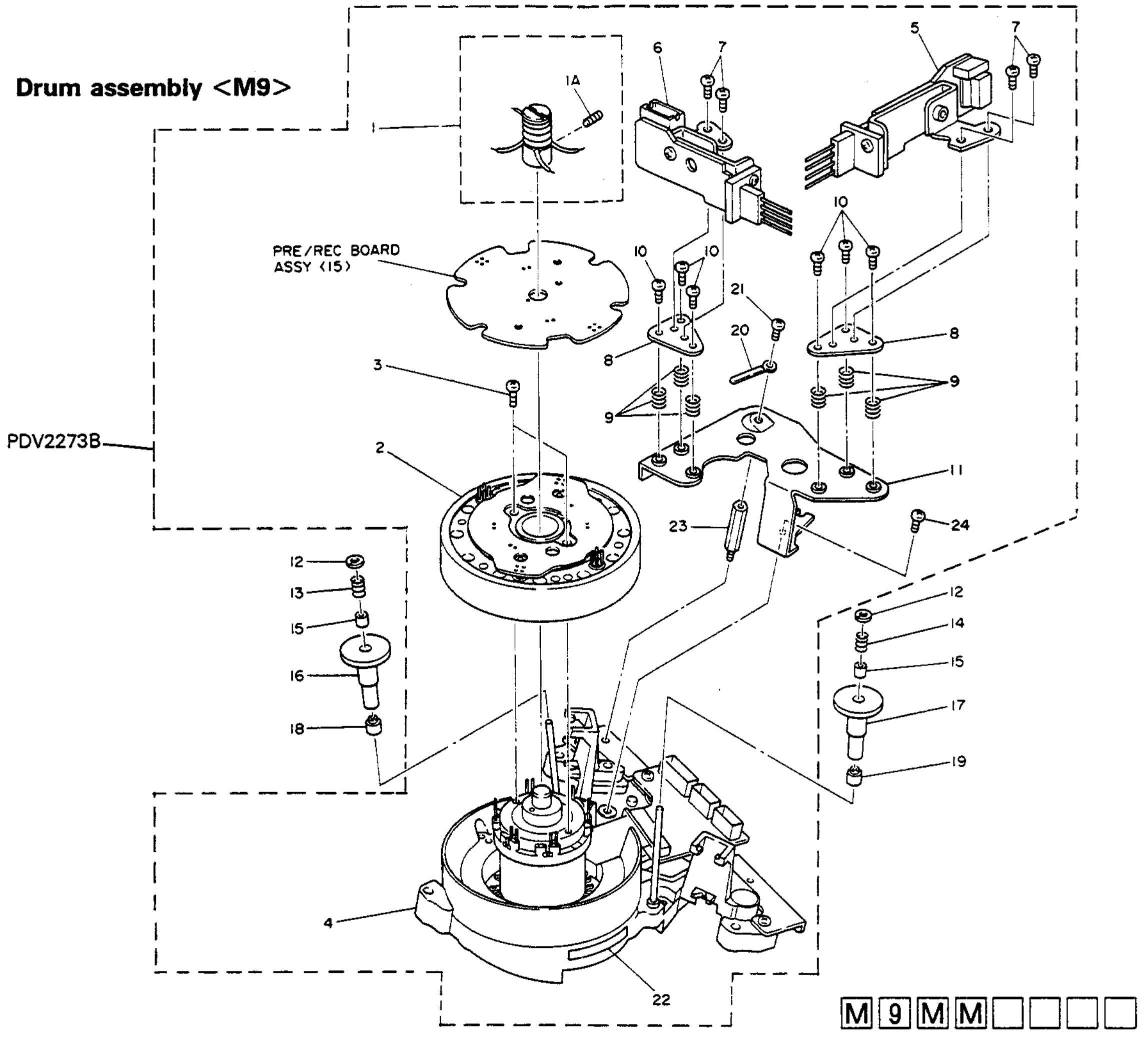
1A
6
7
5
7
PRE/REC BOARD ASSY <15>
10
10
10
10
21
20
8
8
9
9
3
2
PDV2273B
11
23
24
12
13
15
16
18
12
14
15
17
19
4
22
M 9 M M

⚠ REF No.	PART No.	PART NAME, DESCRIPTION	
⚠	PDV2273B	DRUM ASSY	
1	PGZ01630	SLIP RING ASSY	
1A	YFS2603B	SET SCREW	
2	PRD20380C-1	UPPER DRUM ASSY	
3	PDM4264A	DRUM SCREW ASSY, ×2	
4	PRD20382E-7	LOWER DRUM MOTOR ASSY	
5	PRD43986A	BRUSH ASSY(A)	
6	PRD43986B	BRUSH ASSY(B)	
7	BYS2605FS	S.BOLT, ×4	
8	PRD43978	MOUNT PLATE, ×2	
9	PRD30023-51	COMPRESSION SPRING, ×6	
10	BYS2606FS	S.BOLT, ×6	
11	PRD30921	BRUSH BASE	
12	PQM30017-25	SLIT WASHER, ×2	Not incl.
13	PRD30023-42	COMPRESSION SPRING(S),	Not incl.
14	PRD30023-43	COMPRESSION SPRING(T),	Not incl.
15	PRD43675	COLLAR, ×2	Not incl.
16	PGZ01667	INERTIA ROLLER ASSY(S),	Not incl.
17	PGZ01667-02	INERTIA ROLLER ASSY(T),	Not incl.
18	PRD43675-02	COLLAR(S),	Not incl.
19	PRD43675-03-01	COLLAR(T),	Not incl.
20	PU49485-3	WIRE CLAMP	
21	PRD30027-04	SPECIAL SCREW	
22	PDM4067	PART NO.LABEL	
23	PRD43979	STUD	
24	PRD30027-04	SPECIAL SCREW	

5.1.10 Front panel assembly

— CASSETTE PANEL ASSEMBLY MA —

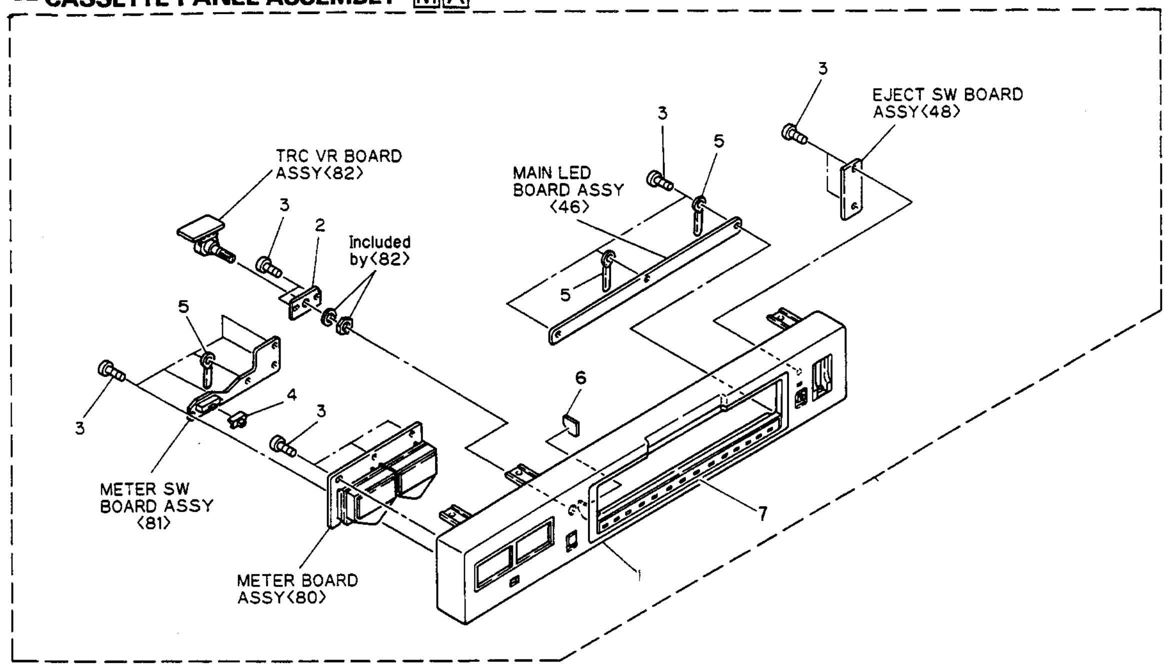
3
EJECT SW BOARD ASSY<48>
3
5
MAIN LED BOARD ASSY <46>
TRC VR BOARD ASSY<82>
3
2
Included by<82>
5
5
6
4
3
3
METER SW BOARD ASSY <81>
METER BOARD ASSY<80>
7
1

— OPERATION PANEL ASSEMBLY MB —

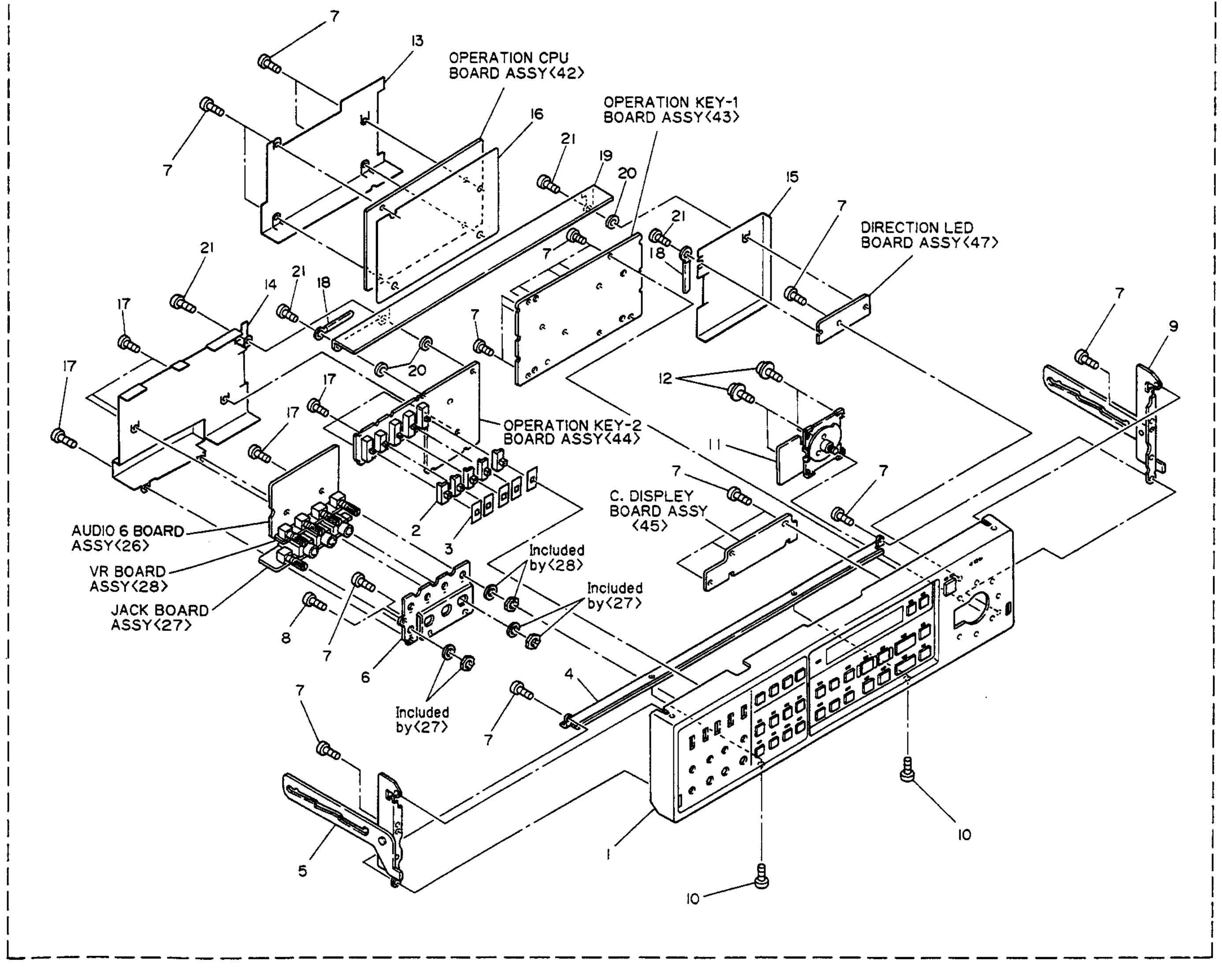
7
13
OPERATION CPU BOARD ASSY<42>
OPERATION KEY-1 BOARD ASSY<43>
7
16
21
19
20
15
7
DIRECTION LED BOARD ASSY<47>
21
21
18
21
14
18
17
7
17
20
7
12
7
9
17
17
17
OPERATION KEY-2 BOARD ASSY<44>
11
7
C. DISPLEY BOARD ASSY <45>
7
AUDIO 6 BOARD ASSY<26>
VR BOARD ASSY<28>
JACK BOARD ASSY<27>
2
3
Included by<28>
Included by<27>
8
7
6
4
Included by<27>
7
7
10
5
1
10

CASSETTE PANEL ASSEMBLY MA

MAMM☐☐☐☐

⚠ REF No.	PART No.	PART NAME, DESCRIPTION
1	PRD10229G-01	CASSETTE PANEL ASSY, BR-S822E
	PRD10229H-01	CASSETTE PANEL ASSY, BR-S622E
2	PRD43427	VR BRACKET
3	SBSF2606Z	SCREW, ×15
4	PRD42927A	SLIDE KNOB ASSY
5	PU49485-4	WIRE CLAMP, ×2
6	PRD43813	PAD
7	PRD30726-03	WINDOW

OPERATION PANEL ASSEMBLY MB

MBMM☐☐☐☐

⚠ REF No.	PART No.	PART NAME, DESCRIPTION
1	PRD10230B	OPERATION PANEL ASSY, BR-S822E
	PRD10259C	OPERATION PANEL ASSY, BR-S622E
2	PRD42830	SLIDE KNOB, ×5
3	PRD43146	KNOB PLATE, ×5
4	PRD20379	OPERATION BRACKET
5	PRD30732A-01	SIDE BRACKET(L) ASSY
6	PRD43428	VR & JACK BRACKET
7	SBSF2606Z	SCREW, ×31
8	LPSP3006Z	ASSY SCREW
9	PRD30733A-01	SIDE BRACKET(R) ASSY
10	PRD43194	SPECIAL SCREW, ×2
11	PGS20128H-02	SEARCH/JOG CONTROL ASSY
12	DPSP3010Z	SCREW, ×4
13	PRD30774-01-01	PROTECTOR(A)
14	PRD30775-01-02	PROTECTOR(B)
15	PRD43477-01-01	PROTECTOR(C)
16	PRD43478	INSULATOR
17	GBST3006Z	SCREW, ×2
18	PU49485-4	WIRE CLAMP, ×2
19	PRD30850	OPERATION BRACKET
20	PRD30084	WASHER, ×3
21	SDSF2610Z	SCREW, ×4

SECTION 6
ELECTRICAL PARTS LIST

SAFETY PRECAUTION

Parts identified by the ⚠ symbol are critical for safety. Replace only with specified part numbers.

<01><02>

MOTHER 1 BOARD ASSEMBLY<01>

#⚠REF No.	PART No.	PART NAME, DESCRIPTION
PWBA	PRK10113A	MOTHER 1 BOARD ASSY
CL1	PEME0802	CLAMP, ×7
CN1	PGZ00420-44	CONNECTOR
CN2	PGZ00420-44	CONNECTOR
CN3	PGZ00420-44	CONNECTOR
CN4	PGZ00420-44	CONNECTOR
CN5	PGZ01297-44	CONNECTOR
CN6	PGZ01297-44	CONNECTOR
CN7	PGZ01297-44	FEMALE CONNECTOR
CN8	PGZ01297-44	FEMALE CONNECTOR
CN9	PU59513-8	CONNECTOR
CN10	PU59513-2	CONNECTOR
CN11	PU59513-8	CONNECTOR
CN12	PU59513-5	CONNECTOR
CN13	PU59513-6	CONNECTOR
CN14	PU59513-7	CONNECTOR
CN15	PU59513-4Y	CONNECTOR
CN16	PU59513-2Y	CONNECTOR
CN17	PU59513-5	CONNECTOR
CN18	PU59513-8	CONNECTOR
CN19	PU59513-7	CONNECTOR
CN20	PU59513-2	CONNECTOR
CN21	PU60329-120	CONNECTOR
CN22	PU60329-120	CONNECTOR
CN23	PU59513-2R	CONNECTOR
CN24	PU59513-6	CONNECTOR
CN25	PU59513-2Y	CONNECTOR
CN26	PU59513-2R	CONNECTOR
CN27	PU59513-4	CONNECTOR
CN28	PU59513-2R	CONNECTOR
CN29	PU59513-2	CONNECTOR
CN30	PU59513-4R	CONNECTOR
CN31	PU59513-2	CONNECTOR
CN32	PU59513-5	CONNECTOR
CN33	PU59513-2	CONNECTOR
CN34	PU59513-2R	CONNECTOR
CN35	PU59513-5R	CONNECTOR
CN36	PU59513-2	CONNECTOR
CN37	PU59513-2R	CONNECTOR
CN38	PU59513-2	CONNECTOR
CN39	PU59513-2R	CONNECTOR
CN40	PU59513-2Y	CONNECTOR

MOTHER 2 BOARD ASSEMBLY<02>

#⚠REF No.	PART No.	PART NAME, DESCRIPTION
PWBA	PRK10111A	MOTHER 2 BOARD ASSY
CL1	PEME0802	CLAMP, ×8
CL2	PGZ01377-03	STYLE PIN, ×3
SPC1	PRD42222	INSULATOR
SPC2	PRD30030-59	PAD
WR1	PGW0205-050200	FLAT WIRE
WR2	PGW0201-050201	FLAT WIRE
CN1	PGZ00420-64	FEMALE CONNECTOR
CN2	PGZ01297-64	FEMALE CONNECTOR
CN3	PGZ01297-64	FEMALE CONNECTOR
CN4	PGZ00420-64	FEMALE CONNECTOR
CN5	PGZ00420-64	FEMALE CONNECTOR
CN6	PGZ01297-64	FEMALE CONNECTOR
CN7	PGZ00420-64	FEMALE CONNECTOR
CN8	PGZ00420-64	FEMALE CONNECTOR
CN9	PGZ01297-64	FEMALE CONNECTOR
CN10	PGZ01297-64	FEMALE CONNECTOR
CN11	PU60329-120	CONNECTOR
CN12	PU59513-2	CONNECTOR
CN13	PU60329-120	CONNECTOR
CN14	PU59513-2Y	CONNECTOR
CN15	PU59513-7	CONNECTOR
CN16	PU59513-4	CONNECTOR
CN17	PU58844-6	CONNECTOR
CN18	PU59513-3	CONNECTOR
CN19	PU59513-2	CONNECTOR
CN20	PU58844-10	CONNECTOR
CN21	PU59513-8	CONNECTOR
CN22	PU59513-2	CONNECTOR
CN23	PU58844-9	CONNECTOR
CN24	PU59513-2	CONNECTOR
CN25	PU59513-2R	CONNECTOR
CN26	PU59513-2Y	CONNECTOR
CN27	PU59513-5	CONNECTOR
CN28	PU59513-4	CONNECTOR
CN29	PU59513-4	CONNECTOR
CN30	PU59513-6	CONNECTOR
CN31	PU59513-4	CONNECTOR
CN32	PU59513-4R	CONNECTOR
CN33	PU59513-4R	CONNECTOR
CN34	PU59513-4Y	CONNECTOR
CN35	PU59513-2R	CONNECTOR
CN36	PU59513-7	CONNECTOR
CN37	PU59513-5R	CONNECTOR
CN38	PU59513-8	CONNECTOR
CN39	PU59513-4	CONNECTOR
CN40	PU59513-6	CONNECTOR
CN41	PU59513-2R	CONNECTOR
CN42	PU59513-4Y	CONNECTOR
CN43	PU59513-3	CONNECTOR
CN44	PU59513-4Y	CONNECTOR
CN45	PU59513-4Y	CONNECTOR
CN46	PU59513-4	CONNECTOR
CN47	PU59513-5	CONNECTOR
CN48	PU59513-3	CONNECTOR
CN49	PU59513-3R	CONNECTOR
CN50	PU59513-8	CONNECTOR
CN51	PU58844-5	CONNECTOR
CN52	PU59513-6	CONNECTOR
CN53	PU59513-4R	CONNECTOR
CN54	PU59513-5R	CONNECTOR
CN55	PU59513-5	CONNECTOR
CN56	PU58844-4R	CONNECTOR
CN57	PU58844-4Y	CONNECTOR
CN58	PU58844-3	CONNECTOR
CN59	PU58844-4	CONNECTOR
CN60	PU58844-2	CONNECTOR
CN61	PU58844-4	CONNECTOR
CN62	PU58844-4R	CONNECTOR
CN63	PU58844-6	CONNECTOR
CN64	PEMC0769-004	CONNECTOR
CN65	PEMC0769-002	CONNECTOR
CN66	PU59513-2R	CONNECTOR
CN67	PU59513-2	CONNECTOR

#⚠	REF No.	PART No.	PART NAME, DESCRIPTION	
	CN68	PU59513-4R	CONNECTOR	
	CN69	PU59513-2	CONNECTOR	
	CN70	PU59513-6	CONNECTOR	
	CN71	PU59513-5	CONNECTOR	
	CN72	PU59513-7	CONNECTOR	
	CN73	PU59513-2	CONNECTOR	
	CN74	PU60251-4	CONNECTOR	
	CN76	PU59513-2Y	CONNECTOR	
	CN77	PU59513-2	CONNECTOR	

SLOT MOTHER BOARD ASSEMBLY<03>

#⚠	REF No.	PART No.	PART NAME, DESCRIPTION	
	PWBA	PRK20091A-01	SLOT MOTHER BOARD ASSY	
	Q1	DTC144EF	TRANSISTOR	
	R1	QRD167J-103	RESISTOR	10kΩ,1/6W
	CN1	PGZ00506-32	MALE CONNECTOR	
	CN2	PU58844-2	CONNECTOR	
	CN3	PU58844-7	CONNECTOR	
	CN4	PU58844-4R	CONNECTOR	

SYSCON MOTHER BOARD ASSEMBLY<04>

#⚠	REF No.	PART No.	PART NAME, DESCRIPTION	
	PWBA	PGE20348A-01	SYSCON MOTHER BOARD ASSY	
	SCW1	SPSP2608Z	SCREW, ×4 NOT INCLUDED	
	SCW2	NNS2600N	NUT, ×4 NOT INCLUDED	
	SPC1	PRD30083-02	SPACER, NOT INCLUDED	
	CN1	PGZ00506-44	MALE CONNECTOR	
	CN2	PGZ00506-44	MALE CONNECTOR	
	CN3	PU58844-105R	CONNECTOR	
	CN4	PU58844-105	CONNECTOR	
	CN5	PU58844-107	CONNECTOR	
	CN6	PU58844-104	CONNECTOR	
	CN7	PU58844-104R	CONNECTOR	
	CN8	PU58844-106	CONNECTOR	
	CN9	PU58844-104R	CONNECTOR	
	CN10	PU58844-107	CONNECTOR	
	CN11	PU58844-102	CONNECTOR	
	CN12	PU58844-102	CONNECTOR	
	CN13	PU58844-107	CONNECTOR	
	CN14	PU58844-102	CONNECTOR	
	CN15	PU58844-104	CONNECTOR	

FUSE BOARD ASSEMBLY<05>

#⚠	REF No.	PART No.	PART NAME, DESCRIPTION	
	PWBA	PRK20177A	FUSE BOARD ASSY	
	STK1	PRD30072-60	STICKER	
	C1	QETA1EM-477	E CAPACITOR	470μF,25V
	C2	QETA1EM-477	E CAPACITOR	470μF,25V
	C3	QETA1EM-478	E CAPACITOR	4700μF,25V
	C4	QETA1EM-477	E CAPACITOR	470μF,25V
	C5	QETA1EM-477	E CAPACITOR	470μF,25V
	C6	QETA1CM-478	E CAPACITOR	4700μF,16V
	C7	QETA1EM-228	E CAPACITOR	2200μF,25V
	C8	QETA1EM-477	E CAPACITOR	470μF,25V
	C9	QETA1EM-477	E CAPACITOR	470μF,25V
⚠	K1	PGZ00354	FERRATE BEADS	
⚠	K2	PGZ00354	FERRATE BEADS	
⚠	K3	PGZ00354	FERRATE BEADS	
⚠	K4	PGZ00354	FERRATE BEADS	
⚠	K5	PGZ00354	FERRATE BEADS	
⚠	K6	PGZ00354	FERRATE BEADS	
⚠	K7	PGZ00354	FERRATE BEADS	
⚠	K8	PGZ00354	FERRATE BEADS	
⚠	K9	PGZ00354	FERRATE BEADS	
	EJ1	PGZ00582	EJECTOR, ×2	
	SPC1	PRD30083-03	SPACER	
	SPC2	PRD30083-03	SPACER	
	SPC3	PRD30083-03	SPACER	
	CN1	PGZ00421-64	MALE CONNECTOR	
⚠	F11	PU51212	FUSE CLIP, ×6	
⚠	F11	QMF51E2-2R5	FUSE, NOT INCLUDED	T2.5A
⚠	F12	QMF51E2-1R0	FUSE, NOT INCLUDED	T1.0A
⚠	F13	QMF51E2-3R15	FUSE, NOT INCLUDED	T3.1A

R/P Y BOARD ASSEMBLY<10>

#⚠	REF No.	PART No.	PART NAME, DESCRIPTION	
	PWBA	PRK20120C	R/P Y BOARD ASSY	
	STK1	PRD30072-53	STICKER	
	IC1	M5278L12	IC	
	IC2	M5278L12	IC	
	IC3	M5278L12	IC	
	IC4	M5278L05	IC	
	IC5	M5278L12	IC	
	IC6	M5278L12	IC	
	IC7	M5278L05	IC	
	IC8	M5278L05	IC	
	IC9	M5278L05	IC	
	IC10	M5278L05	IC	
	IC11	M5278L12	IC	
	IC12	M5278L12	IC	
	IC13	M5278L12	IC	
	IC21	8VT15	IC	
	or	HMC-229	IC	
	IC22	8VT15	IC	
	or	HMC-229	IC	
	IC23	TA7347P	IC	
	IC24	LA7220	IC	
	IC25	TC4053BF	IC	

#⚠REF No.	PART No.	PART NAME,	DESCRIPTION
IC26	AN1082S	IC	
IC27	8VT15	IC	
	or HMC-229	IC	
IC28	JCL0007	IC	
IC29	VC2076DP	IC	
IC30	TA7347P	IC	
IC31	8VT15	IC	
	or HMC-229	IC	
IC32	TA7347P	IC	
IC33	AN6306S	IC	
IC34	TC74HC4053AF	IC	
IC35	TC74HC4538AF	IC	
IC36	TC74HC4538AF	IC	
IC37	AN6393	IC	
IC38	TC74HC86AF	IC	
IC39	AN6308S	IC	
IC40	MC10116L	IC	
IC41	MC10116L	IC	
IC42	MC10107L	IC	
IC43	AN607P	IC	
IC44	8VT15	IC	
	or HMC-229	IC	
IC45	AN607P	IC	
IC46	8VT15	IC	
	or HMC-229	IC	
IC47	TA7347P	IC	
IC48	TA7347P	IC	
IC49	AN608P	IC	
Q1	2SC2412K(RS)	TRANSISTOR	
Q2	2SC2412K(RS)	TRANSISTOR	
Q3	DTC144EK	TRANSISTOR	
Q4	2SC2412K(RS)	TRANSISTOR	
Q5	2SC2412K(RS)	TRANSISTOR	
Q6	2SA1037K(QR)	TRANSISTOR	
Q7	2SA1037K(QR)	TRANSISTOR	
Q8	2SC2412K(RS)	TRANSISTOR	
Q9	2SK621	FE TRANSISTOR	
Q10	2SK621	FE TRANSISTOR	
Q11	2SK621	FE TRANSISTOR	
Q12	2SC2412K(RS)	TRANSISTOR	
Q13	2SC2412K(RS)	TRANSISTOR	
Q14	2SA1037K(QR)	TRANSISTOR	
Q15	2SC2412K(RS)	TRANSISTOR	
Q16	2SA1037K(QR)	TRANSISTOR	
Q17	2SA1037K(QR)	TRANSISTOR	
Q18	2SC2412K(RS)	TRANSISTOR	
Q19	2SC2412K(RS)	TRANSISTOR	
Q20	2SK621	FE TRANSISTOR	
Q21	2SK621	FE TRANSISTOR	
Q22	2SK621	FE TRANSISTOR	
Q23	DTC144EK	TRANSISTOR	
Q24	2SK621	FE TRANSISTOR	
Q25	2SC2412K(RS)	TRANSISTOR	
Q26	2SA1037K(QR)	TRANSISTOR	
Q27	2SC2412K(RS)	TRANSISTOR	
Q28	2SD601(Q)	TRANSISTOR	
Q29	DTC144EK	TRANSISTOR	
Q30	2SA1037K(QR)	TRANSISTOR	
Q31	2SD601(Q)	TRANSISTOR	
Q32	2SA1037K(QR)	TRANSISTOR	
Q33	2SC2412K(RS)	TRANSISTOR	
Q34	2SC2412K(RS)	TRANSISTOR	
Q35	2SA1037K(QR)	TRANSISTOR	
Q36	2SC2412K(RS)	TRANSISTOR	
Q37	2SC2412K(RS)	TRANSISTOR	
Q38	2SA1037K(QR)	TRANSISTOR	
Q39	2SC2412K(RS)	TRANSISTOR	
Q40	DTC144EK	TRANSISTOR	
Q41	2SC2412K(RS)	TRANSISTOR	
Q42	2SC2412K(RS)	TRANSISTOR	
Q43	2SA1037K(QR)	TRANSISTOR	
Q44	2SA1037K(QR)	TRANSISTOR	
Q45	2SD601(Q)	TRANSISTOR	
Q46	2SA1037K(QR)	TRANSISTOR	
Q47	2SC2412K(RS)	TRANSISTOR	
Q48	2SK621	FE TRANSISTOR	
Q49	2SK621	FE TRANSISTOR	
Q50	2SK621	FE TRANSISTOR	
Q51	DTC144EK	TRANSISTOR	
Q52	2SC2412K(RS)	TRANSISTOR	
Q53	2SA1037K(QR)	TRANSISTOR	
Q54	2SC2412K(RS)	TRANSISTOR	
Q55	2SK621	FE TRANSISTOR	
Q56	2SK621	FE TRANSISTOR	
Q57	2SC2412K(RS)	TRANSISTOR	
Q58	DTC144EK	TRANSISTOR	
Q59	2SA1037K(QR)	TRANSISTOR	
Q60	DTC144EK	TRANSISTOR	
Q61	DTC144EK	TRANSISTOR	
Q62	2SA1037K(QR)	TRANSISTOR	
Q63	2SC2412K(RS)	TRANSISTOR	
Q64	2SC2412K(RS)	TRANSISTOR	
Q65	2SK621	FE TRANSISTOR	
Q66	DTC144EK	TRANSISTOR	
Q67	DTC144EK	TRANSISTOR	
Q68	2SC2412K(RS)	TRANSISTOR	
Q69	2SA1037K(QR)	TRANSISTOR	
Q70	2SC2412K(RS)	TRANSISTOR	
Q71	2SC2412K(RS)	TRANSISTOR	
Q72	2SC2412K(RS)	TRANSISTOR	
Q73	2SD601(Q)	TRANSISTOR	
Q74	2SC2412K(RS)	TRANSISTOR	
Q75	2SA1037K(QR)	TRANSISTOR	
Q76	2SC2412K(RS)	TRANSISTOR	
Q77	2SD601(Q)	TRANSISTOR	
Q78	2SC2412K(RS)	TRANSISTOR	
Q79	2SA1037K(QR)	TRANSISTOR	
Q80	2SC2412K(RS)	TRANSISTOR	
Q81	2SA1037K(QR)	TRANSISTOR	
Q82	2SC2412K(RS)	TRANSISTOR	
Q83	2SK621	FE TRANSISTOR	
Q84	2SC2412K(RS)	TRANSISTOR	
Q86	2SC2412K(RS)	TRANSISTOR	
Q87	2SC2412K(RS)	TRANSISTOR	
Q88	2SC2412K(RS)	TRANSISTOR	
Q89	2SC2412K(RS)	TRANSISTOR	
D1	1SS133	DIODE	
D2	1SS133	DIODE	
D3	1SS133	DIODE	
D4	1SS133	DIODE	
D5	1SS133	DIODE	
D6	1SS133	DIODE	
D8	1SS133	DIODE	
D9	1SS133	DIODE	
D10	1SS133	DIODE	
D13	1SS133	DIODE	
D23	1SS133	DIODE	
D24	1SS133	DIODE	
R1	QVZ3513-222	V RESISTOR	2.2kΩ
R2	QVZ3513-102	V RESISTOR	1kΩ

<10>

#⚠REF No.	PART No.	PART NAME, DESCRIPTION	
R3	QVZ3513-102	V RESISTOR	1kΩ
R4	QVPB610-102	V RESISTOR	1kΩ
R5	QVZ3513-332	V RESISTOR	3.3kΩ
R6	QVZ3513-332	V RESISTOR	3.3kΩ
R7	QVZ3513-472	V RESISTOR	4.7kΩ
R8	QVZ3513-472	V RESISTOR	4.7kΩ
R9	QVZ3513-472	V RESISTOR	4.7kΩ
R10	QVZ3513-472	V RESISTOR	4.7kΩ
R11	QVZ3513-222	V RESISTOR	2.2kΩ
R12	QVPB610-202	V RESISTOR	2kΩ
R13	QVZ3513-223	V RESISTOR	22kΩ
R14	QVZ3513-223	V RESISTOR	22kΩ
R15	QVZ3513-472	V RESISTOR	4.7kΩ
R101	QRSA08J-153YN	RESISTOR	15kΩ,1/10W
R102	QRSA08J-123YN	RESISTOR	12kΩ,1/10W
R103	QRSA08J-223YN	RESISTOR	22kΩ,1/10W
R104	QRSA08J-123YN	RESISTOR	12kΩ,1/10W
R105	QRSA08J-392YN	RESISTOR	3.9kΩ,1/10W
R107	QRSA08J-391YN	RESISTOR	390Ω,1/10W
R108	QRSA08J-222YN	RESISTOR	2.2kΩ,1/10W
R109	QRSA08J-333YN	RESISTOR	33kΩ,1/10W
R110	QRSA08J-123YN	RESISTOR	12kΩ,1/10W
R111	QRSA08J-333YN	RESISTOR	33kΩ,1/10W
R112	QRSA08J-123YN	RESISTOR	12kΩ,1/10W
R113	QRSA08J-392YN	RESISTOR	3.9kΩ,1/10W
R114	QRSA08J-182YN	RESISTOR	1.8kΩ,1/10W
R115	NRVA62D-621N	RESISTOR	620Ω,1/16W
R116	QRSA08J-102YN	RESISTOR	1kΩ,1/10W
R117	QRSA08J-103YN	RESISTOR	10kΩ,1/10W
R118	QRSA08J-103YN	RESISTOR	10kΩ,1/10W
R119	QRSA08J-333YN	RESISTOR	33kΩ,1/10W
R120	QRSA08J-333YN	RESISTOR	33kΩ,1/10W
R121	QRSA08J-181YN	RESISTOR	180Ω,1/10W
R122	QRSA08J-181YN	RESISTOR	180Ω,1/10W
R123	QRSA08J-332YN	RESISTOR	3.3kΩ,1/10W
R124	QRSA08J-332YN	RESISTOR	3.3kΩ,1/10W
R125	QRSA08J-102YN	RESISTOR	1kΩ,1/10W
R126	QRSA08J-273YN	RESISTOR	27kΩ,1/10W
R127	QRSA08J-473YN	RESISTOR	47kΩ,1/10W
R128	QRSA08J-333YN	RESISTOR	33kΩ,1/10W
R129	QRSA08J-101YN	RESISTOR	100Ω,1/10W
R130	QRSA08J-682YN	RESISTOR	6.8kΩ,1/10W
R131	QRSA08J-181YN	RESISTOR	180Ω,1/10W
R132	QRSA08J-153YN	RESISTOR	15kΩ,1/10W
R133	QRSA08J-101YN	RESISTOR	100Ω,1/10W
R134	QRSA08J-332YN	RESISTOR	3.3kΩ,1/10W
R135	QRSA08J-682YN	RESISTOR	6.8kΩ,1/10W
R136	QRSA08J-682YN	RESISTOR	6.8kΩ,1/10W
R137	QRSA08J-682YN	RESISTOR	6.8kΩ,1/10W
R138	QRSA08J-183YN	RESISTOR	18kΩ,1/10W
R139	QRSA08J-223YN	RESISTOR	22kΩ,1/10W
R140	QRSA08J-332YN	RESISTOR	3.3kΩ,1/10W
R141	QRSA08J-183YN	RESISTOR	18kΩ,1/10W
R142	QRSA08J-223YN	RESISTOR	22kΩ,1/10W
R143	QRSA08J-332YN	RESISTOR	3.3kΩ,1/10W
R144	QRSA08J-332YN	RESISTOR	3.3kΩ,1/10W
R145	NRVA62D-202N	RESISTOR	2kΩ,1/16W
R146	QRSA08J-393YN	RESISTOR	39kΩ,1/10W
R147	QRSA08J-332YN	RESISTOR	3.3kΩ,1/10W
R148	QRSA08J-273YN	RESISTOR	27kΩ,1/10W
R149	QRSA08J-333YN	RESISTOR	33kΩ,1/10W
R150	QRSA08J-222YN	RESISTOR	2.2kΩ,1/10W
R151	QRSA08J-102YN	RESISTOR	1kΩ,1/10W
R152	QRSA08J-332YN	RESISTOR	3.3kΩ,1/10W
R153	QRSA08J-122YN	RESISTOR	1.2kΩ,1/10W
R154	QRSA08J-332YN	RESISTOR	3.3kΩ,1/10W
R155	QRSA08J-222YN	RESISTOR	2.2kΩ,1/10W

#⚠REF No.	PART No.	PART NAME, DESCRIPTION	
R156	QRSA08J-152YN	RESISTOR	1.5kΩ,1/10W
R157	QRSA08J-0R0Y	RESISTOR	0Ω,1/10W
R158	QRSA08J-101YN	RESISTOR	100Ω,1/10W
R159	QRSA08J-101YN	RESISTOR	100Ω,1/10W
R160	QRSA08J-222YN	RESISTOR	2.2kΩ,1/10W
R161	QRSA08J-153YN	RESISTOR	15kΩ,1/10W
R162	QRSA08J-153YN	RESISTOR	15kΩ,1/10W
R163	QRSA08J-222YN	RESISTOR	2.2kΩ,1/10W
R164	QRSA08J-333YN	RESISTOR	33kΩ,1/10W
R165	QRSA08J-152YN	RESISTOR	1.5kΩ,1/10W
R166	QRSA08J-152YN	RESISTOR	1.5kΩ,1/10W
R167	QRSA08J-682YN	RESISTOR	6.8kΩ,1/10W
R168	QRSA08J-100YN	RESISTOR	10Ω,1/10W
R169	QRSA08J-182YN	RESISTOR	1.8kΩ,1/10W
R170	QRV141F-1331AY	RESISTOR	1.33kΩ,1/4W
R171	QRSA08J-472YN	RESISTOR	4.7kΩ,1/10W
R172	QRSA08J-272YN	RESISTOR	2.7kΩ,1/10W
R173	QRSA08J-472YN	RESISTOR	4.7kΩ,1/10W
R174	QRSA08J-103YN	RESISTOR	10kΩ,1/10W
R175	QRSA08J-333YN	RESISTOR	33kΩ,1/10W
R176	QRSA08J-223YN	RESISTOR	22kΩ,1/10W
R177	QRSA08J-391YN	RESISTOR	390Ω,1/10W
R178	NRVA62D-302N	CMF RESISTOR	3kΩ,1/16W
R179	QRSA08J-102YN	RESISTOR	1kΩ,1/10W
R180	QRSA08J-102YN	RESISTOR	1kΩ,1/10W
R181	QRSA08J-223YN	RESISTOR	22kΩ,1/10W
R182	QRSA08J-101YN	RESISTOR	100Ω,1/10W
R183	QRSA08J-222YN	RESISTOR	2.2kΩ,1/10W
R184	QRSA08J-101YN	RESISTOR	100Ω,1/10W
R185	QRSA08J-102YN	RESISTOR	1kΩ,1/10W
R186	QRSA08J-471YN	RESISTOR	470Ω,1/10W
R187	QRSA08J-101YN	RESISTOR	100Ω,1/10W
R188	QRSA08J-102YN	RESISTOR	1kΩ,1/10W
R189	QRSA08J-471YN	RESISTOR	470Ω,1/10W
R190	QRSA08J-103YN	RESISTOR	10kΩ,1/10W
R191	QRSA08J-101YN	RESISTOR	100Ω,1/10W
R192	NRVA62D-331N	RESISTOR	330Ω,1/16W
R193	NRVA62D-302N	RESISTOR	3kΩ,1/16W
R194	NRVA62D-152N	RESISTOR	1.5kΩ,1/16W
R195	NRVA62D-162N	CMF RESISTOR	1.6kΩ,1/16W
R196	NRVA62D-151N	CMF RESISTOR	150Ω,1/16W
R197	NRVA62D-332N	RESISTOR	3.3kΩ,1/16W
R198	NRVA62D-102N	RESISTOR	1kΩ,1/16W
R199	NRVA62D-102N	RESISTOR	1kΩ,1/16W
R200	NRVA62D-471N	RESISTOR	470Ω,1/16W
R201	NRVA62D-332N	RESISTOR	3.3kΩ,1/16W
R202	NRVA62D-152N	RESISTOR	1.5kΩ,1/16W
R203	NRVA62D-332N	RESISTOR	3.3kΩ,1/16W
R204	QRSA08J-223YN	RESISTOR	22kΩ,1/10W
R205	QRSA08J-333YN	RESISTOR	33kΩ,1/10W
R206	QRSA08J-222YN	RESISTOR	2.2kΩ,1/10W
R207	QRSA08J-391YN	RESISTOR	390Ω,1/10W
R209	NRVA62D-242N	RESISTOR	2.4kΩ,1/16W
R210	QRSA08J-391YN	RESISTOR	390Ω,1/10W
R211	QRSA08J-102YN	RESISTOR	1kΩ,1/10W
R212	QRSA08J-272YN	RESISTOR	2.7kΩ,1/10W
R213	QRSA08J-222YN	RESISTOR	2.2kΩ,1/10W
R214	QRSA08J-182YN	RESISTOR	1.8kΩ,1/10W
R215	QRSA08J-102YN	RESISTOR	1kΩ,1/10W
R216	QRSA08J-821YN	RESISTOR	820Ω,1/10W
R217	QRSA08J-272YN	RESISTOR	2.7kΩ,1/10W
R218	QRSA08J-103YN	RESISTOR	10kΩ,1/10W
R219	QRSA08J-103YN	RESISTOR	10kΩ,1/10W
R220	QRSA08J-223YN	RESISTOR	22kΩ,1/10W
R221	QRSA08J-123YN	RESISTOR	12kΩ,1/10W
R222	QRSA08J-223YN	RESISTOR	22kΩ,1/10W
R223	QRSA08J-123YN	RESISTOR	12kΩ,1/10W

#⚠	REF No.	PART No.	PART NAME, DESCRIPTION	
	R224	QRSA08J-562YN	RESISTOR	5.6kΩ,1/10W
	R225	QRSA08J-182YN	RESISTOR	1.8kΩ,1/10W
	R226	QRSA08J-681YN	RESISTOR	680Ω,1/10W
	R227	QRSA08J-222YN	RESISTOR	2.2kΩ,1/10W
	R228	QRSA08J-103YN	RESISTOR	10kΩ,1/10W
	R229	QRSA08J-471YN	RESISTOR	470Ω,1/10W
	R230	QRSA08J-102YN	RESISTOR	1kΩ,1/10W
	R231	QRSA08J-222YN	RESISTOR	2.2kΩ,1/10W
	R232	QRSA08J-272YN	RESISTOR	2.7kΩ,1/10W
	R233	NRVA62D-561N	RESISTOR	560Ω,1/16W
	R234	NRVA62D-272N	RESISTOR	2.7kΩ,1/16W
	R235	NRVA62D-222N	RESISTOR	2.2kΩ,1/16W
	R236	QRSA08J-564YN	RESISTOR	560kΩ,1/10W
	R237	QRSA08J-100YN	RESISTOR	10Ω,1/10W
	R238	QRSA08J-332YN	RESISTOR	3.3kΩ,1/10W
	R239	QRSA08J-562YN	RESISTOR	5.6kΩ,1/10W
	R240	QRSA08J-182YN	RESISTOR	1.8kΩ,1/10W
	R241	QRSA08J-103YN	RESISTOR	10kΩ,1/10W
	R242	QRSA08J-222YN	RESISTOR	2.2kΩ,1/10W
	R243	QRSA08J-122YN	RESISTOR	1.2kΩ,1/10W
	R244	QRSA08J-821YN	RESISTOR	820Ω,1/10W
	R245	QRSA08J-101YN	RESISTOR	100Ω,1/10W
	R246	QRSA08J-101YN	RESISTOR	100Ω,1/10W
	R247	QRSA08J-101YN	RESISTOR	100Ω,1/10W
	R248	NRVA62D-334N	RESISTOR	330kΩ,1/16W
	R249	NRVA62D-432N	RESISTOR	4.3kΩ,1/16W
	R250	NRVA62D-104N	RESISTOR	100kΩ,1/16W
	R251	QRSA08J-101YN	RESISTOR	100Ω,1/10W
	R252	QRSA08J-103YN	RESISTOR	10kΩ,1/10W
	R253	QRSA08J-333YN	RESISTOR	33kΩ,1/10W
	R254	QRSA08J-102YN	RESISTOR	1kΩ,1/10W
	R255	QRSA08J-222YN	RESISTOR	2.2kΩ,1/10W
	R256	QRSA08J-182YN	RESISTOR	1.8kΩ,1/10W
	R257	QRSA08J-561YN	RESISTOR	560Ω,1/10W
	R258	QRSA08J-821YN	RESISTOR	820Ω,1/10W
	R259	QRSA08J-103YN	RESISTOR	10kΩ,1/10W
	R260	QRSA08J-103YN	RESISTOR	10kΩ,1/10W
	R261	QRSA08J-103YN	RESISTOR	10kΩ,1/10W
	R262	QRSA08J-223YN	RESISTOR	22kΩ,1/10W
	R263	QRSA08J-333YN	RESISTOR	33kΩ,1/10W
	R264	QRSA08J-152YN	RESISTOR	1.5kΩ,1/10W
	R265	QRSA08J-222YN	RESISTOR	2.2kΩ,1/10W
	R266	QRSA08J-102YN	RESISTOR	1kΩ,1/10W
	R267	QRSA08J-561YN	RESISTOR	560Ω,1/10W
	R268	QRSA08J-272YN	RESISTOR	2.7kΩ,1/10W
	R269	QRSA08J-103YN	RESISTOR	10kΩ,1/10W
	R270	QRSA08J-103YN	RESISTOR	10kΩ,1/10W
	R271	QRSA08J-102YN	RESISTOR	1kΩ,1/10W
	R272	QRSA08J-102YN	RESISTOR	1kΩ,1/10W
	R273	QRSA08J-103YN	RESISTOR	10kΩ,1/10W
	R274	QRSA08J-103YN	RESISTOR	10kΩ,1/10W
	R275	QRSA08J-273YN	RESISTOR	27kΩ,1/10W
	R276	QRSA08J-273YN	RESISTOR	27kΩ,1/10W
	R277	QRSA08J-102YN	RESISTOR	1kΩ,1/10W
	R278	QRSA08J-561YN	RESISTOR	560Ω,1/10W
	R279	QRSA08J-152YN	RESISTOR	1.5kΩ,1/10W
	R280	QRSA08J-154YN	RESISTOR	150kΩ,1/10W
	R281	QRSA08J-473YN	RESISTOR	47kΩ,1/10W
	R282	QRSA08J-152YN	RESISTOR	1.5kΩ,1/10W
	R283	QRSA08J-223YN	RESISTOR	22kΩ,1/10W
	R284	QRSA08J-223YN	RESISTOR	22kΩ,1/10W
	R285	QRSA08J-103YN	RESISTOR	10kΩ,1/10W
	R286	QRSA08J-103YN	RESISTOR	10kΩ,1/10W
	R287	QRSA08J-223YN	RESISTOR	22kΩ,1/10W
	R288	QRSA08J-683YN	RESISTOR	68kΩ,1/10W
	R289	QRSA08J-223YN	RESISTOR	22kΩ,1/10W
	R291	QRSA08J-103YN	RESISTOR	10kΩ,1/10W

#⚠	REF No.	PART No.	PART NAME, DESCRIPTION	
	R292	QRSA08J-122YN	RESISTOR	1.2kΩ,1/10W
	R293	QRSA08J-122YN	RESISTOR	1.2kΩ,1/10W
	R294	QRSA08J-561YN	RESISTOR	560Ω,1/10W
	R295	QRSA08J-561YN	RESISTOR	560Ω,1/10W
	R296	QRSA08J-391YN	RESISTOR	390Ω,1/10W
	R297	QRSA08J-391YN	RESISTOR	390Ω,1/10W
	R298	QRSA08J-182YN	RESISTOR	1.8kΩ,1/10W
	R299	QRSA08J-472YN	RESISTOR	4.7kΩ,1/10W
	R300	QRV141F-5230AY	RESISTOR	523Ω,1/4W
	R301	QRV141F-7870AY	RESISTOR	787Ω,1/4W
	R302	QRSA08J-821YN	RESISTOR	820Ω,1/10W
	R303	QRSA08J-821YN	RESISTOR	820Ω,1/10W
	R304	QRSA08J-122YN	RESISTOR	1.2kΩ,1/10W
	R305	QRSA08J-122YN	RESISTOR	1.2kΩ,1/10W
	R306	QRSA08J-122YN	RESISTOR	1.2kΩ,1/10W
	R307	QRSA08J-122YN	RESISTOR	1.2kΩ,1/10W
	R308	QRSA08J-562YN	RESISTOR	5.6kΩ,1/10W
	R309	QRSA08J-122YN	RESISTOR	1.2kΩ,1/10W
	R310	QRSA08J-122YN	RESISTOR	1.2kΩ,1/10W
	R311	QRSA08J-104YN	RESISTOR	100kΩ,1/10W
	R312	QRSA08J-122YN	RESISTOR	1.2kΩ,1/10W
	R313	QRSA08J-122YN	RESISTOR	1.2kΩ,1/10W
	R314	QRSA08J-223YN	RESISTOR	22kΩ,1/10W
	R315	QRSA08J-333YN	RESISTOR	33kΩ,1/10W
	R316	QRSA08J-151YN	RESISTOR	150Ω,1/10W
	R317	QRSA08J-221YN	RESISTOR	220Ω,1/10W
	R318	QRSA08J-222YN	RESISTOR	2.2kΩ,1/10W
	R319	QRSA08J-333YN	RESISTOR	33kΩ,1/10W
	R320	QRSA08J-123YN	RESISTOR	12kΩ,1/10W
	R321	QRSA08J-222YN	RESISTOR	2.2kΩ,1/10W
	R322	QRSA08J-102YN	RESISTOR	1kΩ,1/10W
	R323	QRSA08J-272YN	RESISTOR	2.7kΩ,1/10W
	R324	QRSA08J-101YN	RESISTOR	100Ω,1/10W
	R325	QRSA08J-223YN	RESISTOR	22kΩ,1/10W
	R326	QRSA08J-273YN	RESISTOR	27kΩ,1/10W
	R327	QRSA08J-222YN	RESISTOR	2.2kΩ,1/10W
	R328	QRSA08J-391YN	RESISTOR	390Ω,1/10W
	R330	NRVA62D-242N	RESISTOR	2.4kΩ,1/16W
	R331	QRSA08J-391YN	RESISTOR	390Ω,1/10W
	R332	QRSA08J-182YN	RESISTOR	1.8kΩ,1/10W
	R333	QRSA08J-821YN	RESISTOR	820Ω,1/10W
	R334	QRSA08J-333YN	RESISTOR	33kΩ,1/10W
	R335	QRSA08J-183YN	RESISTOR	18kΩ,1/10W
	R336	QRSA08J-333YN	RESISTOR	33kΩ,1/10W
	R337	QRSA08J-183YN	RESISTOR	18kΩ,1/10W
	R338	QRSA08J-472YN	RESISTOR	4.7kΩ,1/10W
	R339	NRVA62D-182N	RESISTOR	1.8kΩ,1/16W
	R340	QRSA08J-102YN	RESISTOR	1kΩ,1/10W
	R341	QRSA08J-391YN	RESISTOR	390Ω,1/10W
	R342	QRSA08J-821YN	RESISTOR	820Ω,1/10W
	R344	QRSA08J-102YN	RESISTOR	1kΩ,1/10W
	R345	QRSA08J-222YN	RESISTOR	2.2kΩ,1/10W
	R346	QRSA08J-272YN	RESISTOR	2.7kΩ,1/10W
	R347	QRSA08J-222YN	RESISTOR	2.2kΩ,1/10W
	R348	QRSA08J-102YN	RESISTOR	1kΩ,1/10W
	R349	QRSA08J-102YN	RESISTOR	1kΩ,1/10W
	R350	QRSA08J-182YN	RESISTOR	1.8kΩ,1/10W
	R351	QRSA08J-821YN	RESISTOR	820Ω,1/10W
	R352	QRSA08J-333YN	RESISTOR	33kΩ,1/10W
	R353	QRSA08J-183YN	RESISTOR	18kΩ,1/10W
	R354	QRSA08J-333YN	RESISTOR	33kΩ,1/10W
	R355	QRSA08J-183YN	RESISTOR	18kΩ,1/10W
	R356	QRSA08J-562YN	RESISTOR	5.6kΩ,1/10W
	R357	NRVA62D-563N	RESISTOR	56kΩ,1/16W
	R358	QRSA08J-471YN	RESISTOR	470Ω,1/10W
	R359	QRSA08J-562YN	RESISTOR	5.6kΩ,1/10W
	R360	QRSA08J-221YN	RESISTOR	220Ω,1/10W

<10>

#⚠REF No.	PART No.	PART NAME,	DESCRIPTION
R361	QRSA08J-821YN	RESISTOR	820Ω,1/10W
R363	QRSA08J-102YN	RESISTOR	1kΩ,1/10W
R364	QRSA08J-182YN	RESISTOR	1.8kΩ,1/10W
R365	QRSA08J-272YN	RESISTOR	2.7kΩ,1/10W
R366	QRSA08J-103YN	RESISTOR	10kΩ,1/10W
R367	QRSA08J-273YN	RESISTOR	27kΩ,1/10W
R368	QRSA08J-333YN	RESISTOR	33kΩ,1/10W
R369	QRSA08J-102YN	RESISTOR	1kΩ,1/10W
R370	QRSA08J-681YN	RESISTOR	680Ω,1/10W
R371	QRSA08J-391YN	RESISTOR	390Ω,1/10W
R372	QRSA08J-332YN	RESISTOR	3.3kΩ,1/10W
R373	QRSA08J-103YN	RESISTOR	10kΩ,1/10W
R374	QRSA08J-101YN	RESISTOR	100Ω,1/10W
R375	QRSA08J-222YN	RESISTOR	2.2kΩ,1/10W
R376	QRSA08J-101YN	RESISTOR	100Ω,1/10W
R377	QRSA08J-222YN	RESISTOR	2.2kΩ,1/10W
R378	QRSA08J-271YN	RESISTOR	270Ω,1/10W
R379	QRSA08J-103YN	RESISTOR	10kΩ,1/10W
R380	QRSA08J-222YN	RESISTOR	2.2kΩ,1/10W
R381	QRSA08J-101YN	RESISTOR	100Ω,1/10W
R382	QRSA08J-102YN	RESISTOR	1kΩ,1/10W
R384	QRSA08J-562YN	RESISTOR	5.6kΩ,1/10W
R385	QRSA08J-101YN	RESISTOR	100Ω,1/10W
R386	NRVA62D-562N	RESISTOR	5.6kΩ,1/16W
R387	QRSA08J-101YN	RESISTOR	100Ω,1/10W
R388	QRSA08J-391YN	RESISTOR	390Ω,1/10W
R390	QRSA08J-103YN	RESISTOR	10kΩ,1/10W
R391	QRSA08J-0R0Y	RESISTOR	0Ω,1/10W
R393	NRVA62D-393N	RESISTOR	39kΩ,1/16W
R397	QRSA08J-471YN	RESISTOR	470Ω,1/10W
R399	QRSA08J-152YN	RESISTOR	1.5kΩ,1/10W
R405	QRSA08J-152YN	RESISTOR	1.5kΩ,1/10W
R406	QRSA08J-392YN	RESISTOR	3.9kΩ,1/10W
R407	QRSA08J-102YN	RESISTOR	1kΩ,1/10W
R408	ERS-A39J-102	THERMISTOR	
R409	QRSA08J-103YN	RESISTOR	10kΩ,1/10W
R410	QRSA08J-221YN	RESISTOR	220Ω,1/10W
R411	QRSA08J-102YN	RESISTOR	1kΩ,1/10W
R413	QRSA08J-125YN	RESISTOR	1.2MΩ,1/10W
R414	QRSA08J-273YN	RESISTOR	27kΩ,1/10W
R415	QRSA08J-183YN	RESISTOR	18kΩ,1/10W
R416	QRSA08J-182YN	RESISTOR	1.8kΩ,1/10W
R417	QRSA08J-182YN	RESISTOR	1.8kΩ,1/10W
R418	QRSA08J-122YN	RESISTOR	1.2kΩ,1/10W
R419	QRSA08J-272YN	RESISTOR	2.7kΩ,1/10W
R420	QRSA08J-333YN	RESISTOR	33kΩ,1/10W
R421	QRSA08J-183YN	RESISTOR	18kΩ,1/10W
R422	QRSA08J-821YN	RESISTOR	820Ω,1/10W
R423	QRSA08J-821YN	RESISTOR	820Ω,1/10W
R424	QRSA08J-561YN	RESISTOR	560Ω,1/10W
R425	QRSA08J-272YN	RESISTOR	2.7kΩ,1/10W
R428	QRD161J-102	RESISTOR	1kΩ,1/6W
R429	QRD161J-220	RESISTOR	22Ω,1/6W
R430	QRD161J-391	RESISTOR	390Ω,1/6W
R431	QRD161J-563	RESISTOR	56kΩ,1/6W
R432	QRD161J-563	RESISTOR	56kΩ,1/6W
C1	QETC1AM-107	E CAPACITOR	100μF,10V
C2	QETC1AM-476	E CAPACITOR	47μF,10V
C3	QCF31HP-103	CAPACITOR	0.01μF,50V
C4	QCS31HJ-470	CAPACITOR	47pF,50V
C5	QETC1AM-476	E CAPACITOR	47μF,10V
C6	QETC1AM-476	E CAPACITOR	47μF,10V
C7	QCF31HP-103	CAPACITOR	0.01μF,50V
C9	QETC1AM-107	E CAPACITOR	100μF,10V
C10	QETA1AM-476	E CAPACITOR	47μF,10V

#⚠REF No.	PART No.	PART NAME,	DESCRIPTION
C11	QCF11HP-103	CAPACITOR	0.01μF,50V
C12	QETC1AM-476	E CAPACITOR	47μF,10V
C13	QETC1AM-476	E CAPACITOR	47μF,10V
C14	QETC1AM-476	E CAPACITOR	47μF,10V
C15	QCF31HP-103	CAPACITOR	0.01μF,50V
C16	QCC31CK-104	CAPACITOR	0.1μF,16V
C17	QETC1CM-476	E CAPACITOR	47μF,16V
C18	QCZ0208-104	CAPACITOR	0.1μF
C19	QETC1AM-476	E CAPACITOR	47μF,10V
C20	QCS31HJ-331	CAPACITOR	330pF,50V
C21	QCC31CK-104	CAPACITOR	0.1μF,16V
C22	QFN31HJ-104	M CAPACITOR	0.1μF,50V
C24	QFN31HJ-102	M CAPACITOR	0.001μF,50V
C25	QCC31CK-104	CAPACITOR	0.1μF,16V
C26	QETC1CM-476	E CAPACITOR	47μF,16V
C27	QCC31EK-104	CAPACITOR	0.1μF,25V
C28	QETC1CM-476	E CAPACITOR	47μF,16V
C29	QFN31HJ-223	M CAPACITOR	0.022μF,50V
C30	QENC1AM-476	NP E CAPACITOR	47μF,10V
C31	QCF31HP-103	CAPACITOR	0.01μF,50V
C32	QETC1AM-476	E CAPACITOR	47μF,10V
C33	QENC1AM-226	NP E CAPACITOR	22μF,10V
C34	QCF31HP-103	CAPACITOR	0.01μF,50V
C35	QETC1AM-476	E CAPACITOR	47μF,10V
C36	QCF31HP-103	CAPACITOR	0.01μF,50V
C38	QCS31HJ-820	CAPACITOR	82pF,50V
C39	QCS31HJ-470	CAPACITOR	47pF,50V
C40	QETC1CM-107	E CAPACITOR	100μF,16V
C41	QETC1EM-475	E CAPACITOR	4.7μF,25V
C42	QCZ0208-104	CAPACITOR	0.1μF
C43	QETC1CM-476	E CAPACITOR	47μF,16V
C44	QCC31EK-104	CAPACITOR	0.1μF,25V
C45	QETC1AM-476	E CAPACITOR	47μF,10V
C46	QETC1HM-225	E CAPACITOR	2.2μF,50V
C47	QETC1HM-225	E CAPACITOR	2.2μF,50V
C48	QENC1AM-226	E CAPACITOR	22μF,10V
C49	QFP41HF-271	PP CAPACITOR	270pF,50V
C50	QFP41HG-470	PP CAPACITOR	47pF,50V
C51	QFP41HG-181	PP CAPACITOR	180pF,50V
C52	QFP41HG-301	PP CAPACITOR	300pF,50V
C53	QFP41HG-820	PP CAPACITOR	82pF,50V
C54	QFP41HG-271	PP CAPACITOR	270pF,50V
C55	QFP41HG-301	PP CAPACITOR	300pF,50V
C56	QFP41HG-221	PP CAPACITOR	220pF,50V
C57	QFP41HG-301	PP CAPACITOR	300pF,50V
C58	QCC31CK-104	CAPACITOR	0.1μF,16V
C59	QETC1AM-476	E CAPACITOR	47μF,10V
C60	QCC31CK-104	CAPACITOR	0.1μF,16V
C61	QETC1AM-476	E CAPACITOR	47μF,10V
C62	QETC1AM-476	E CAPACITOR	47μF,10V
C63	QETC1AM-476	E CAPACITOR	47μF,10V
C64	QETC1AM-476	E CAPACITOR	47μF,10V
C65	QCF31HP-103	CAPACITOR	0.01μF,50V
C66	QCC31CK-104	CAPACITOR	0.1μF,16V
C67	QETC1CM-476	E CAPACITOR	47μF,16V
C68	QCC31EK-104	CAPACITOR	0.1μF,25V
C69	QETC1AM-476	E CAPACITOR	47μF,10V
C70	QETC1AM-476	E CAPACITOR	47μF,10V
C71	QCF31HP-103	CAPACITOR	0.01μF,50V
C73	QETC1AM-476	E CAPACITOR	47μF,10V
C74	QETC1AM-476	E CAPACITOR	47μF,10V
C75	QCF31HP-103	CAPACITOR	0.01μF,50V
C76	QETC1CM-476	E CAPACITOR	47μF,16V
C77	QCC31EK-104	CAPACITOR	0.1μF,25V
C78	QETC1CM-106	E CAPACITOR	10μF,16V
C79	QETC1CM-106	E CAPACITOR	10μF,16V
C80	QETC1AM-107	E CAPACITOR	100μF,10V

#△REF No.	PART No.	PART NAME, DESCRIPTION	
C81	QCF31HP-103	CAPACITOR	0.01μF,50V
C82	QCT25SH-470	PP CAPACITOR	47pF
C83	QFN31HJ-103	M CAPACITOR	0.01μF,50V
C84	QFN31HJ-103	M CAPACITOR	0.01μF,50V
C85	QCC31CK-104	CAPACITOR	0.1μF,16V
C86	QETC1AM-476	E CAPACITOR	47μF,10V
C87	QCC31CK-104	CAPACITOR	0.1μF,16V
C88	QENC1HM-105	NP E CAPACITOR	1μF,50V
C90	QFP41HG-391	PP CAPACITOR	390pF,50V
C91	QETC1HM-105	E CAPACITOR	1μF,50V
C92	QETC1HM-105	E CAPACITOR	1μF,50V
C93	QETC1AM-226	E CAPACITOR	22μF,10V
C94	QCS31HJ-390	CAPACITOR	39pF,50V
C95	QCS31HJ-121	CAPACITOR	120pF,50V
C96	QENC1HM-105	M CAPACITOR	1μF,50V
C97	QCS31HJ-121	CAPACITOR	120pF,50V
C98	QCF31HP-103	CAPACITOR	0.01μF,50V
C99	QCC31CK-104	CAPACITOR	0.1μF,16V
C100	QETC1AM-476	E CAPACITOR	47μF,10V
C101	QCC31CK-104	CAPACITOR	0.1μF,16V
C102	QETC1AM-226	E CAPACITOR	22μF,10V
C103	QCS31HJ-390	CAPACITOR	39pF,50V
C104	QCS31HJ-121	CAPACITOR	120pF,50V
C105	QENC1HM-105	NP E CAPACITOR	1μF,50V
C106	QCS31HJ-470	CAPACITOR	47pF,50V
C107	QCS31HJ-820	CAPACITOR	82pF,50V
C108	QCF31HP-103	CAPACITOR	0.01μF,50V
C109	QFN31HJ-104	M CAPACITOR	0.1μF,50V
C110	QFN31HJ-103	M CAPACITOR	0.01μF,50V
C111	QFN31HJ-223	M CAPACITOR	0.022μF,50V
C112	QFN31HJ-104	M CAPACITOR	0.1μF,50V
C113	QCS31HJ-150	CAPACITOR	15pF,50V
C114	QCS31HJ-5R0	CAPACITOR	5pF,50V
C115	QCF31HP-103	CAPACITOR	0.01μF,50V
C116	QFN31HJ-333	M CAPACITOR	0.033μF,50V
C117	QCS31HJ-471	CAPACITOR	470pF,50V
C118	QFN31HJ-682	M CAPACITOR	0.0068μF,50V
C119	QCS31HJ-391	CAPACITOR	390pF,50V
C120	QCF31HP-103	CAPACITOR	0.01μF,50V
C121	QFN31HJ-223	M CAPACITOR	0.022μF,50V
C122	QFN31HJ-223	M CAPACITOR	0.022μF,50V
C123	QCF31HP-103	CAPACITOR	0.01μF,50V
C124	QFN31HJ-223	M CAPACITOR	0.022μF,50V
C125	QCC31CK-104	CAPACITOR	0.1μF,16V
C126	QETC1CM-476	E CAPACITOR	47μF,16V
C127	QCC31CK-104	CAPACITOR	0.1μF,16V
C128	QCT25CH-2R0	CAPACITOR	2pF
C129	QFN31HJ-104	M CAPACITOR	0.1μF,50V
C130	QFP41HG-102	PP CAPACITOR	0.001μF,50V
C131	QETC1AM-476	E CAPACITOR	47μF,10V
C132	QETC1AM-337	E CAPACITOR	330μF,10V
C133	QCC31CK-104	CAPACITOR	0.1μF,16V
C134	QETC1AM-108	E CAPACITOR	1000μF,10V
C135	QCC31CK-104	CAPACITOR	0.1μF,16V
C136	QETC1CM-476	E CAPACITOR	47μF,16V
C137	QCC31EK-104	CAPACITOR	0.1μF,25V
C138	QCC31CK-104	CAPACITOR	0.1μF,16V
C139	QFN31HJ-103	M CAPACITOR	0.01μF,50V
C140	QFN31HJ-223	M CAPACITOR	0.022μF,50V
C141	QETC1AM-476	E CAPACITOR	47μF,10V
C142	QETC1CM-337	E CAPACITOR	330μF,16V
C143	QCC31CK-104	CAPACITOR	0.1μF,16V
C144	QETC1AM-476	E CAPACITOR	47μF,10V
C145	QETC1AM-107	E CAPACITOR	100μF,10V
C146	QETC1AM-107	E CAPACITOR	100μF,10V
C147	QCF31HP-103	CAPACITOR	0.01μF,50V
C148	QCT25CH-470	CAPACITOR	47pF

#△REF No.	PART No.	PART NAME, DESCRIPTION	
C149	QCS31HJ-331	CAPACITOR	330pF,50V
C150	QCT25CH-680	CAPACITOR	68pF
C151	QETC1CM-336	E CAPACITOR	33μF,16V
C152	QETC1CM-337	E CAPACITOR	330μF,16V
C153	QCC31CK-104	CAPACITOR	0.1μF,16V
C154	QETC1AM-476	E CAPACITOR	47μF,10V
C155	QETC1AM-107	E CAPACITOR	100μF,10V
C156	QETC1AM-107	E CAPACITOR	100μF,10V
C157	QCF31HP-103	CAPACITOR	0.01μF,50V
C158	QCT25CH-560	CAPACITOR	56pF
C159	QFN31HJ-332	CAPACITOR	0.0033μF,50V
C161	QETC1CM-107	E CAPACITOR	100μF,16V
C162	QETC1AM-476	E CAPACITOR	47μF,10V
C163	QETC1AM-476	E CAPACITOR	47μF,10V
C164	QCF31HP-103	CAPACITOR	0.01μF,50V
C165	QCC31CK-104	CAPACITOR	0.1μF,16V
C166	QETC1CM-476	E CAPACITOR	47μF,16V
C167	QCC31EK-104	CAPACITOR	0.1μF,25V
C168	QETC1AM-476	E CAPACITOR	47μF,10V
C169	QETC1AM-476	E CAPACITOR	47μF,10V
C170	QCF31HP-103	CAPACITOR	0.01μF,50V
C171	QETC1AM-476	E CAPACITOR	47μF,10V
C172	QCC31CK-104	CAPACITOR	0.1μF,16V
C173	QETC1CM-476	E CAPACITOR	47μF,16V
C174	QCC31EK-104	CAPACITOR	0.1μF,25V
C175	QETC1AM-476	E CAPACITOR	47μF,10V
C177	QCTA1CH-101	CAPACITOR	100pF,16V
C178	QCTA1CH-680	CAPACITOR	68pF,16V
C180	QCYA1HK-103	CAPACITOR	0.01μF,50V
C181	QFP41HG-390	PP CAPACITOR	39pF,50V
C182	QETC1CM-476	E CAPACITOR	47μF,16V
C183	QFN31HJ-103	M CAPACITOR	0.01μF,50V
C189	QETC1AM-476	E CAPACITOR	47μF,10V
C192	QCTA1CH-101	CAPACITOR	100pF,16V
C193	QETC1AM-476	E CAPACITOR	47μF,10V
C195	QETC1AM-476	E CAPACITOR	47μF,10V
C196	QCT25CH-220	CAPACITOR	22pF
C197	QCS11HJ-181	CAPACITOR	180pF,50V
L1	PU48530-221J	COIL	220μH
L2	PU48530-221J	COIL	220μH
L5	PU48530-470J	COIL	47μH
L10	PU48530-100J	COIL	10μH
L11	PU48530-101J	COIL	100μH
L12	PU48530-100J	COIL	10μH
L13	PU48530-220J	COIL	22μH
LPF1	PELN0336-01-01	LOW PASS FILTER	
LPF2	PU58021-3	LOW PASS FILTER	
LPF3	PELN0336-01-01	LOW PASS FILTER	
LPF4	PU58021-3	LOW PASS FILTER	
DL1	PGZ00130-002	DELAY LINE	
DL2	PGZ00130-001	DELAY LINE	
DL3	QRD161J-0R0	DELAY LINE	
DL4	PGZ01554	DELAY LINE	
DL5	PGZ01553	DELAY LINE	
S1	PU54440	SWITCH	
S2	PU54440	SWITCH	
EJ1	PGZ00582	EJECTOR, ×2	

<10><11>

#△REF No.	PART No.	PART NAME, DESCRIPTION
RV1	PU53276	PLASTIC RIVET, ×4
SLD1	PRD30781-01-03	SHIELD PLATE
TP1	PU54983	TEST PIN, ×13(TP1-9, GND1-4)
CN1	PGZ00421-44	MALE CONNECTOR
CN2	PGZ00421-44	MALE CONNECTOR

R/P COLOR BOARD ASSEMBLY<11>

#△REF No.	PART No.	PART NAME, DESCRIPTION
PWBA	PRK20126A-01	R/P COLOR 1 BOARD ASSY
STK1	PRD30072-52	STICKER
IC1	M5278L12	IC
IC2	M5278L05	IC
IC3	M5278L12	IC
IC4	M5278L12	IC
IC5	M5278L05	IC
IC6	M5278L09	IC
IC7	M5278L05	IC
IC8	M5278L05	IC
IC11	TA7347P	IC
IC12	AN6366N	IC
IC13	TA7347P	IC
IC14	TA7347P	IC
IC15	AN608P	IC
IC16	8VT15	IC
or	HMC-229	IC
IC17	TA7347P	IC
IC18	TC74HC00AF	IC
IC20	TA8644N	IC
IC21	TA7347P	IC
IC22	VC2505C	IC
IC23	TA7347P	IC
IC24	AN607P	IC
IC25	TC4051BP	IC
IC26	TC4013BF	IC
IC27	TC74HC151AF	IC
IC28	TC74HC04AF	IC
IC29	TC74HC4538AF	IC
IC30	TC74HC4538AF	IC
IC31	AN3916	IC
IC32	TC74HC4538AF	IC
IC33	TC74HC4538AF	IC
IC34	TC7W04F	IC
IC35	TC74HC393AP	IC
IC36	AN6041	IC
IC37	AN607P	IC
IC38	AN608P	IC
IC39	LA7213	IC
IC40	AN3296	IC
IC41	AN607P	IC
Q1	2SC2412K(RS)	TRANSISTOR
Q2	2SC2412K(RS)	TRANSISTOR
Q3	2SA1037K(QR)	TRANSISTOR
Q4	2SC2412K(RS)	TRANSISTOR
Q5	2SA1037K(QR)	TRANSISTOR
Q6	2SC2412K(RS)	TRANSISTOR
Q7	DTC144EK	TRANSISTOR
Q8	2SC2412K(RS)	TRANSISTOR
Q10	2SC2412K(RS)	TRANSISTOR
Q11	2SA1037K(QR)	TRANSISTOR
Q12	2SC2412K(RS)	TRANSISTOR
Q13	2SA1037K(QR)	TRANSISTOR
Q14	2SC2412K(RS)	TRANSISTOR
Q15	2SC2412K(RS)	TRANSISTOR
Q16	2SA1037K(QR)	TRANSISTOR
Q17	2SC2412K(RS)	TRANSISTOR
Q18	2SC2412K(RS)	TRANSISTOR
Q19	2SC2412K(RS)	TRANSISTOR
Q20	2SC2412K(RS)	TRANSISTOR
Q21	2SC2412K(RS)	TRANSISTOR
Q22	2SC2412K(RS)	TRANSISTOR
Q23	2SK621	FE TRANSISTOR
Q24	2SK621	FE TRANSISTOR
Q25	2SA1037K(QR)	TRANSISTOR
Q26	2SC2412K(RS)	TRANSISTOR
Q27	2SA1037K(QR)	TRANSISTOR
Q28	2SA1037K(QR)	TRANSISTOR
Q29	2SC2412K(RS)	TRANSISTOR
Q30	2SC2412K(RS)	TRANSISTOR
Q31	2SC2412K(RS)	TRANSISTOR
Q32	DTC144EK	TRANSISTOR
Q33	2SC2412K(RS)	TRANSISTOR
Q34	2SC2412K(RS)	TRANSISTOR
Q35	2SC2412K(RS)	TRANSISTOR
Q36	2SA1037K(QR)	TRANSISTOR
Q37	DTC144EK	TRANSISTOR
Q38	2SC2412K(RS)	TRANSISTOR
Q39	2SC2412K(RS)	TRANSISTOR
Q41	DTC144EK	TRANSISTOR
Q42	2SC2412K(RS)	TRANSISTOR
Q43	2SC2412K(RS)	TRANSISTOR
Q44	2SC2412K(RS)	TRANSISTOR
Q45	2SC2412K(RS)	TRANSISTOR
Q46	2SC2412K(RS)	TRANSISTOR
Q48	2SC2412K(RS)	TRANSISTOR
Q49	DTC144EK	TRANSISTOR
Q50	DTC144EK	TRANSISTOR
Q51	2SC2412K(RS)	TRANSISTOR
Q52	2SC2412K(RS)	TRANSISTOR
Q53	2SC2412K(RS)	TRANSISTOR
Q54	2SC2412K(RS)	TRANSISTOR
Q55	2SC2412K(RS)	TRANSISTOR
Q56	2SC2412K(RS)	TRANSISTOR
Q57	2SC2412K(RS)	TRANSISTOR
Q58	2SC2412K(RS)	TRANSISTOR
Q59	2SC2412K(RS)	TRANSISTOR
Q62	2SC2412K(RS)	TRANSISTOR
Q63	2SA1037K(QR)	TRANSISTOR
Q67	2SK621	FE TRANSISTOR
Q68	2SK621	FE TRANSISTOR
Q69	2SK621	FE TRANSISTOR
Q70	2SK621	FE TRANSISTOR
Q71	DTC144EK	TRANSISTOR
Q74	2SK656	FE TRANSISTOR
D1	1SS133	DIODE
D2	1SS133	DIODE
D3	1SS133	DIODE
D6	1SS133	DIODE
D7	1SS133	DIODE

#⚠	REF No.	PART No.	PART NAME,	DESCRIPTION
	D8	1SS133	DIODE	
	D9	1SS133	DIODE	
	D10	1SS133	DIODE	
	D11	1SS133	DIODE	
	D12	1SS133	DIODE	
	D13	1SS133	DIODE	
	D14	1SS133	DIODE	
	D15	1SS133	DIODE	
	D16	1SS133	DIODE	
	D17	1SS133	DIODE	
	D18	1SS133	DIODE	
	D19	1SS133	DIODE	
	D20	1SS133	DIODE	
	D21	1SS133	DIODE	
	R1	QVPB610-102	V RESISTOR	1kΩ
	R2	QVPB610-202	V RESISTOR	2kΩ
	R3	QVZ3513-222	V RESISTOR	2.2kΩ
	R4	QVZ3513-222	V RESISTOR	2.2kΩ
	R5	QVZ3513-471	V RESISTOR	470Ω
	R6	QVZ3513-472	V RESISTOR	4.7kΩ
	R7	QVZ3513-472	V RESISTOR	4.7kΩ
	R8	QVZ3513-471	V RESISTOR	470Ω
	R9	QVZ3513-103	V RESISTOR	10kΩ
	R10	QVZ3513-681	V RESISTOR	680Ω
	R11	QVZ3513-221	V RESISTOR	220Ω
	R12	QVZ3513-222	V RESISTOR	2.2kΩ
	R13	QVZ3513-222	V RESISTOR	2.2kΩ
	R14	QVPB610-102	V RESISTOR	1kΩ
	R15	QRD161J-152	RESISTOR	1.5kΩ,1/6W
	R16	QRD161J-222	V RESISTOR	2.2kΩ,1/6W
	R17	QRD161J-0R0	V RESISTOR	0Ω,1/6W
	R18	QRD161J-184	RESISTOR	180kΩ,1/6W
	R19	QVZ3513-222	V RESISTOR	2.2kΩ
	R20	QVPC405-222	V RESISTOR	2.2kΩ
	R21	QVZ3513-471	V RESISTOR	470Ω
	R22	QVZ3513-472	V RESISTOR	4.7kΩ
	R23	QVZ3513-472	V RESISTOR	4.7kΩ
	R101	QRSA08J-223YN	RESISTOR	22kΩ,1/10W
	R102	QRSA08J-273YN	RESISTOR	27kΩ,1/10W
	R103	QRSA08J-152YN	RESISTOR	1.5kΩ,1/10W
	R104	QRSA08J-391YN	RESISTOR	390Ω,1/10W
	R105	QRSA08J-391YN	RESISTOR	390Ω,1/10W
	R106	QRSA08J-102YN	RESISTOR	1kΩ,1/10W
	R107	QRSA08J-102YN	RESISTOR	1kΩ,1/10W
	R108	QRSA08J-101YN	RESISTOR	100Ω,1/10W
	R109	QRSA08J-222YN	RESISTOR	2.2kΩ,1/10W
	R110	QRSA08J-102YN	RESISTOR	1kΩ,1/10W
	R111	QRSA08J-102YN	RESISTOR	1kΩ,1/10W
	R112	QRSA08J-102YN	RESISTOR	1kΩ,1/10W
	R113	QRSA08J-102YN	RESISTOR	1kΩ,1/10W
	R114	QRSA08J-101YN	RESISTOR	100Ω,1/10W
	R115	QRSA08J-222YN	RESISTOR	2.2kΩ,1/10W
	R116	QRSA08J-181YN	RESISTOR	180Ω,1/10W
	R117	QRSA08J-223YN	RESISTOR	22kΩ,1/10W
	R118	QRSA08J-472YN	RESISTOR	4.7kΩ,1/10W
	R119	QRSA08J-182YN	RESISTOR	1.8kΩ,1/10W
	R120	QRSA08J-121YN	RESISTOR	120Ω,1/10W
	R121	QRSA08J-562YN	RESISTOR	5.6kΩ,1/10W
	R122	QRSA08J-472YN	RESISTOR	4.7kΩ,1/10W
	R123	QRSA08J-822YN	RESISTOR	8.2kΩ,1/10W
	R124	QRSA08J-0R0Y	RESISTOR	0Ω,1/10W
	R126	QRSA08J-103YN	RESISTOR	10kΩ,1/10W
	R127	QRSA08J-223YN	RESISTOR	22kΩ,1/10W
	R128	QRSA08J-472YN	RESISTOR	4.7kΩ,1/10W
	R129	QRSA08J-102YN	RESISTOR	1kΩ,1/10W
	R130	QRSA08J-102YN	RESISTOR	1kΩ,1/10W
	R133	QRSA08J-392YN	RESISTOR	3.9kΩ,1/10W
	R134	QRSA08J-821YN	RESISTOR	820Ω,1/10W
	R135	QRSA08J-102YN	RESISTOR	1kΩ,1/10W
	R136	QRSA08J-102YN	RESISTOR	1kΩ,1/10W
	R137	QRSA08J-102YN	RESISTOR	1kΩ,1/10W
	R138	QRSA08J-101YN	RESISTOR	100Ω,1/10W
	R139	QRSA08J-222YN	RESISTOR	2.2kΩ,1/10W
	R140	QRSA08J-821YN	RESISTOR	820Ω,1/10W
	R141	QRSA08J-102YN	RESISTOR	1kΩ,1/10W
	R142	QRSA08J-102YN	RESISTOR	1kΩ,1/10W
	R143	QRSA08J-102YN	RESISTOR	1kΩ,1/10W
	R144	QRSA08J-101YN	RESISTOR	100Ω,1/10W
	R145	QRSA08J-222YN	RESISTOR	2.2kΩ,1/10W
	R146	QRSA08J-181YN	RESISTOR	180Ω,1/10W
	R147	QRSA08J-223YN	RESISTOR	22kΩ,1/10W
	R148	QRSA08J-472YN	RESISTOR	4.7kΩ,1/10W
	R149	QRSA08J-471YN	RESISTOR	470Ω,1/10W
	R150	QRSA08J-152YN	RESISTOR	1.5kΩ,1/10W
	R151	QRSA08J-101YN	RESISTOR	100Ω,1/10W
	R152	QRSA08J-332YN	RESISTOR	3.3kΩ,1/10W
	R153	QRSA08J-222YN	RESISTOR	2.2kΩ,1/10W
	R154	QRSA08J-152YN	RESISTOR	1.5kΩ,1/10W
	R155	QRSA08J-181YN	RESISTOR	180Ω,1/10W
	R156	QRSA08J-223YN	RESISTOR	22kΩ,1/10W
	R157	QRSA08J-392YN	RESISTOR	3.9kΩ,1/10W
	R158	QRSA08J-101YN	RESISTOR	100Ω,1/10W
	R159	QRSA08J-562YN	RESISTOR	5.6kΩ,1/10W
	R160	QRSA08J-391YN	RESISTOR	390Ω,1/10W
	R161	QRSA08J-0R0Y	RESISTOR	0Ω,1/10W
	R162	QRSA08J-391YN	RESISTOR	390Ω,1/10W
	R163	QRSA08J-223YN	RESISTOR	22kΩ,1/10W
	R164	QRSA08J-103YN	RESISTOR	10kΩ,1/10W
	R165	QRSA08J-272YN	RESISTOR	2.7kΩ,1/10W
	R166	QRSA08J-152YN	RESISTOR	1.5kΩ,1/10W
	R167	QRSA08J-152YN	RESISTOR	1.5kΩ,1/10W
	R168	QRSA08J-470YN	RESISTOR	47Ω,1/10W
	R170	QRSA08J-333YN	RESISTOR	33kΩ,1/10W
	R171	QRSA08J-223YN	RESISTOR	22kΩ,1/10W
	R172	QRSA08J-333YN	RESISTOR	33kΩ,1/10W
	R173	QRSA08J-223YN	RESISTOR	22kΩ,1/10W
	R174	QRSA08J-472YN	RESISTOR	4.7kΩ,1/10W
	R175	QRSA08J-470YN	RESISTOR	47Ω,1/10W
	R176	QRSA08J-102YN	RESISTOR	1kΩ,1/10W
	R177	QRSA08J-102YN	RESISTOR	1kΩ,1/10W
	R178	QRSA08J-102YN	RESISTOR	1kΩ,1/10W
	R179	QRSA08J-102YN	RESISTOR	1kΩ,1/10W
	R180	QRSA08J-181YN	RESISTOR	180Ω,1/10W
	R181	QRSA08J-223YN	RESISTOR	22kΩ,1/10W
	R182	QRSA08J-122YN	RESISTOR	1.2kΩ,1/10W
	R183	QRSA08J-822YN	RESISTOR	8.2kΩ,1/10W
	R184	QRSA08J-103YN	RESISTOR	10kΩ,1/10W
	R185	QRSA08J-102YN	RESISTOR	1kΩ,1/10W
	R186	QRSA08J-332YN	RESISTOR	3.3kΩ,1/10W
	R187	QRSA08J-472YN	RESISTOR	4.7kΩ,1/10W
	R188	QRSA08J-472YN	RESISTOR	4.7kΩ,1/10W
	R189	QRSA08J-333YN	RESISTOR	33kΩ,1/10W
	R190	QRSA08J-223YN	RESISTOR	22kΩ,1/10W
	R191	QRSA08J-273YN	RESISTOR	27kΩ,1/10W
	R192	QRSA08J-152YN	RESISTOR	1.5kΩ,1/10W
	R193	QRSA08J-102YN	RESISTOR	1kΩ,1/10W
	R194	QRSA08J-102YN	RESISTOR	1kΩ,1/10W
	R195	QRSA08J-102YN	RESISTOR	1kΩ,1/10W
	R196	QRSA08J-102YN	RESISTOR	1kΩ,1/10W
	R197	QRSA08J-102YN	RESISTOR	1kΩ,1/10W
	R198	QRSA08J-681YN	RESISTOR	680Ω,1/10W
	R199	QRSA08J-331YN	RESISTOR	330Ω,1/10W

#⚠REF No.	PART No.	PART NAME,	DESCRIPTION
R200	QRSA08J-181YN	RESISTOR	180Ω,1/10W
R201	QRSA08J-223YN	RESISTOR	22kΩ,1/10W
R202	QRSA08J-102YN	RESISTOR	1kΩ,1/10W
R203	QRSA08J-221YN	RESISTOR	220Ω,1/10W
R204	QRSA08J-102YN	RESISTOR	1kΩ,1/10W
R205	QRSA08J-102YN	RESISTOR	1kΩ,1/10W
R206	QRSA08J-223YN	RESISTOR	22kΩ,1/10W
R207	QRSA08J-103YN	RESISTOR	10kΩ,1/10W
R208	QRSA08J-152YN	RESISTOR	1.5kΩ,1/10W
R209	QRSA08J-102YN	RESISTOR	1kΩ,1/10W
R210	QRSA08J-332YN	RESISTOR	3.3kΩ,1/10W
R211	QRSA08J-472YN	RESISTOR	4.7kΩ,1/10W
R212	QRSA08J-392YN	RESISTOR	3.9kΩ,1/10W
R213	QRSA08J-152YN	RESISTOR	1.5kΩ,1/10W
R214	QRSA08J-562YN	RESISTOR	5.6kΩ,1/10W
R215	QRSA08J-223YN	RESISTOR	22kΩ,1/10W
R216	QRSA08J-183YN	RESISTOR	18kΩ,1/10W
R217	QRSA08J-472YN	RESISTOR	4.7kΩ,1/10W
R218	QRSA08J-471YN	RESISTOR	470Ω,1/10W
R219	QRSA08J-332YN	RESISTOR	3.3kΩ,1/10W
R220	QRSA08J-333YN	RESISTOR	33kΩ,1/10W
R224	QRSA08J-471YN	RESISTOR	470Ω,1/10W
R226	QRSA08J-333YN	RESISTOR	33kΩ,1/10W
R227	QRD161J-102	RESISTOR	1kΩ,1/6W
R228	QRSA08J-220YN	RESISTOR	22Ω,1/10W
R229	QRSA08J-101YN	RESISTOR	100Ω,1/10W
R230	QRSA08J-101YN	RESISTOR	100Ω,1/10W
R231	QRSA08J-181YN	RESISTOR	180Ω,1/10W
R232	QRSA08J-223YN	RESISTOR	22kΩ,1/10W
R233	QRSA08J-472YN	RESISTOR	4.7kΩ,1/10W
R234	QRSA08J-223YN	RESISTOR	22kΩ,1/10W
R235	QRSA08J-273YN	RESISTOR	27kΩ,1/10W
R236	QRSA08J-152YN	RESISTOR	1.5kΩ,1/10W
R237	QRSA08J-221YN	RESISTOR	220Ω,1/10W
R238	QRSA08J-221YN	RESISTOR	220Ω,1/10W
R239	QRSA08J-0R0Y	RESISTOR	0Ω,1/10W
R240	QRSA08J-392YN	RESISTOR	3.9kΩ,1/10W
R241	QRSA08J-473YN	RESISTOR	47kΩ,1/10W
R242	QRSA08J-183YN	RESISTOR	18kΩ,1/10W
R243	QRSA08J-152YN	RESISTOR	1.5kΩ,1/10W
R244	QRSA08J-152YN	RESISTOR	1.5kΩ,1/10W
R245	QRSA08J-471YN	RESISTOR	470Ω,1/10W
R246	QRSA08J-152YN	RESISTOR	1.5kΩ,1/10W
R248	QRSA08J-223YN	RESISTOR	22kΩ,1/10W
R249	QRSA08J-273YN	RESISTOR	27kΩ,1/10W
R250	QRSA08J-152YN	RESISTOR	1.5kΩ,1/10W
R253	QRSA08J-152YN	RESISTOR	1.5kΩ,1/10W
R254	QRSA08J-103YN	RESISTOR	10kΩ,1/10W
R255	QRSA08J-223YN	RESISTOR	22kΩ,1/10W
R256	QRSA08J-273YN	RESISTOR	27kΩ,1/10W
R257	QRSA08J-103YN	RESISTOR	10kΩ,1/10W
R258	QRSA08J-222YN	RESISTOR	2.2kΩ,1/10W
R259	QRSA08J-103YN	RESISTOR	10kΩ,1/10W
R260	QRSA08J-103YN	RESISTOR	10kΩ,1/10W
R261	QRSA08J-103YN	RESISTOR	10kΩ,1/10W
R262	QRSA08J-103YN	RESISTOR	10kΩ,1/10W
R263	QRSA08J-562YN	RESISTOR	5.6kΩ,1/10W
R264	QRSA08J-103YN	RESISTOR	10kΩ,1/10W
R265	QRSA08J-392YN	RESISTOR	3.9kΩ,1/10W
R266	QRSA08J-473YN	RESISTOR	47kΩ,1/10W
R267	QRSA08J-221YN	RESISTOR	220Ω,1/10W
R268	QRSA08J-102YN	RESISTOR	1kΩ,1/10W
R269	QRSA08J-332YN	RESISTOR	3.3kΩ,1/10W
R270	QRSA08J-183YN	RESISTOR	18kΩ,1/10W
R271	QRSA08J-333YN	RESISTOR	33kΩ,1/10W
R273	QRSA08J-472YN	RESISTOR	4.7kΩ,1/10W

#⚠REF No.	PART No.	PART NAME,	DESCRIPTION
R274	QRSA08J-0R0Y	RESISTOR	0Ω,1/10W
R275	QRSA08J-392YN	RESISTOR	3.9kΩ,1/10W
R276	QRSA08J-221YN	RESISTOR	220Ω,1/10W
R277	QRSA08J-105YN	RESISTOR	1MΩ,1/10W
R278	QRSA08J-181YN	RESISTOR	180Ω,1/10W
R279	QRSA08J-0R0Y	RESISTOR	0Ω,1/10W
R280	QRSA08J-223YN	RESISTOR	22kΩ,1/10W
R281	QRSA08J-273YN	RESISTOR	27kΩ,1/10W
R282	QRSA08J-152YN	RESISTOR	1.5kΩ,1/10W
R283	QRSA08J-102YN	RESISTOR	1kΩ,1/10W
R284	QRSA08J-102YN	RESISTOR	1kΩ,1/10W
R285	QRSA08J-472YN	RESISTOR	4.7kΩ,1/10W
R286	QRSA08J-391YN	RESISTOR	390Ω,1/10W
R287	QRSA08J-391YN	RESISTOR	390Ω,1/10W
R288	QRSA08J-471YN	RESISTOR	470Ω,1/10W
R289	QRSA08J-223YN	RESISTOR	22kΩ,1/10W
R290	QRSA08J-273YN	RESISTOR	27kΩ,1/10W
R291	QRSA08J-152YN	RESISTOR	1.5kΩ,1/10W
R292	QRSA08J-181YN	RESISTOR	180Ω,1/10W
R293	QRSA08J-181YN	RESISTOR	180Ω,1/10W
R294	QRSA08J-102YN	RESISTOR	1kΩ,1/10W
R295	QRSA08J-102YN	RESISTOR	1kΩ,1/10W
R296	QRSA08J-152YN	RESISTOR	1.5kΩ,1/10W
R297	QRSA08J-102YN	RESISTOR	1kΩ,1/10W
R298	QRSA08J-102YN	RESISTOR	1kΩ,1/10W
R299	QRSA08J-102YN	RESISTOR	1kΩ,1/10W
R300	QRSA08J-152YN	RESISTOR	1.5kΩ,1/10W
R301	QRSA08J-392YN	RESISTOR	3.9kΩ,1/10W
R303	QRSA08J-152YN	RESISTOR	1.5kΩ,1/10W
R304	QRSA08J-103YN	RESISTOR	10kΩ,1/10W
R305	QRSA08J-333YN	RESISTOR	33kΩ,1/10W
R306	QRSA08J-102YN	RESISTOR	1kΩ,1/10W
R307	QRSA08J-222YN	RESISTOR	2.2kΩ,1/10W
R308	QRSA08J-681YN	RESISTOR	680Ω,1/10W
R311	QRSA08J-103YN	RESISTOR	10kΩ,1/10W
R312	QRSA08J-102YN	RESISTOR	1kΩ,1/10W
R313	QRSA08J-473YN	RESISTOR	47kΩ,1/10W
R314	QRSA08J-473YN	RESISTOR	47kΩ,1/10W
R315	QRSA08J-473YN	RESISTOR	47kΩ,1/10W
R316	QRSA08J-473YN	RESISTOR	47kΩ,1/10W
R317	QRSA08J-473YN	RESISTOR	47kΩ,1/10W
R318	QRSA08J-473YN	RESISTOR	47kΩ,1/10W
R319	QRSA08J-473YN	RESISTOR	47kΩ,1/10W
R320	QRSA08J-473YN	RESISTOR	47kΩ,1/10W
R321	QRSA08J-122YN	RESISTOR	1.2kΩ,1/10W
R322	QRSA08J-0R0Y	RESISTOR	0Ω,1/10W
R323	QRSA08J-152YN	RESISTOR	1.5kΩ,1/10W
R324	QRSA08J-223YN	RESISTOR	22kΩ,1/10W
R325	QRSA08J-273YN	RESISTOR	27kΩ,1/10W
R326	QRSA08J-223YN	RESISTOR	22kΩ,1/10W
R327	QRSA08J-273YN	RESISTOR	27kΩ,1/10W
R328	QRSA08J-222YN	RESISTOR	2.2kΩ,1/10W
R329	QRSA08J-102YN	RESISTOR	1kΩ,1/10W
R330	QRSA08J-681YN	RESISTOR	680Ω,1/10W
R331	QRSA08J-473YN	RESISTOR	47kΩ,1/10W
R332	QRSA08J-184YN	RESISTOR	180kΩ,1/10W
R333	QRSA08J-104YN	RESISTOR	100kΩ,1/10W
R334	NRVA62D-473N	RESISTOR	47kΩ,1/16W
R335	NRVA62D-513N	RESISTOR	51kΩ,1/16W
R336	QRSA08J-684YN	RESISTOR	680kΩ,1/10W
R337	QRSA08J-103YN	RESISTOR	10kΩ,1/10W
R338	NRVA62D-753N	RESISTOR	75kΩ,1/16W
R339	QRSA08J-0R0Y	RESISTOR	0Ω,1/10W
R346	QRD161J-332	RESISTOR	3.3kΩ,1/6W
C1	QCFA1HZ-104	CAPACITOR	0.1μF,50V

#△	REF No.	PART No.	PART NAME, DESCRIPTION	
	C2	QCFA1HZ-104	CAPACITOR	0.1μF,50V
	C3	QETC1CM-476	E CAPACITOR	47μF,16V
	C4	QCYA1EK-103	CAPACITOR	0.01μF,25V
	C5	QCS31HJ-101	CAPACITOR	100pF,50V
	C6	QCS31HJ-101	CAPACITOR	100pF,50V
	C7	QCYA1EK-103	CAPACITOR	0.01μF,25V
	C8	QCYA1EK-103	CAPACITOR	0.01μF,25V
	C9	QETC1CM-476	E CAPACITOR	47μF,16V
	C10	QCFA1HZ-223	CAPACITOR	0.022μF,50V
	C11	QCFA1HZ-104	CAPACITOR	0.1μF,50V
	C12	QCFA1HZ-104	CAPACITOR	0.1μF,50V
	C13	QETC1AM-107	E CAPACITOR	100μF,10V
	C14	QCYA1EK-103	CAPACITOR	0.01μF,25V
	C15	QCYA1EK-103	CAPACITOR	0.01μF,25V
	C16	QETC1AM-476	E CAPACITOR	47μF,10V
	C17	QCYA1EK-103	CAPACITOR	0.01μF,25V
	C18	QCYA1EK-103	CAPACITOR	0.01μF,25V
	C19	QCYA1EK-103	CAPACITOR	0.01μF,25V
	C20	QEE81CM-106	TANTAL CAPACITOR	10μF,16V
	C21	QCFA1HZ-104	CAPACITOR	0.1μF,50V
	C22	QCFA1HZ-104	CAPACITOR	0.1μF,50V
	C23	QETC1CM-476	E CAPACITOR	47μF,16V
	C24	QCYA1HJ-102	CAPACITOR	0.001μF,50V
	C25	QCYA1EK-103	CAPACITOR	0.01μF,25V
	C26	QCS31HJ-101	CAPACITOR	100pF,50V
	C27	QCS31HJ-101	CAPACITOR	100pF,50V
	C28	QCYA1EK-103	CAPACITOR	0.01μF,25V
	C29	QCYA1EK-103	CAPACITOR	0.01μF,25V
	C30	QETC1CM-476	E CAPACITOR	47μF,16V
	C31	QCFA1HZ-223	CAPACITOR	0.022μF,50V
	C32	QCFA1HZ-104	CAPACITOR	0.1μF,50V
	C33	QCFA1HZ-104	CAPACITOR	0.1μF,50V
	C34	QETC1CM-476	E CAPACITOR	47μF,16V
	C35	QCYA1EK-103	CAPACITOR	0.01μF,25V
	C36	QCYA1EK-103	CAPACITOR	0.01μF,25V
	C37	QCYA1EK-103	CAPACITOR	0.01μF,25V
	C38	QCYA1EK-103	CAPACITOR	0.01μF,25V
	C40	QCS31HJ-470	CAPACITOR	47pF,50V
	C41	QCYA1EK-103	CAPACITOR	0.01μF,25V
	C42	QCYA1EK-103	CAPACITOR	0.01μF,25V
	C43	QCYA1EK-103	CAPACITOR	0.01μF,25V
	C44	QETC1CM-476	E CAPACITOR	47μF,16V
	C45	QCFA1HZ-223	CAPACITOR	0.022μF,50V
	C46	QCS31HJ-151	CAPACITOR	150pF,50V
	C49	QETC1HM-104	E CAPACITOR	0.1μF,50V
	C50	QFN31HJ-473	M CAPACITOR	0.047μF,50V
	C51	QFN31HJ-473	M CAPACITOR	0.047μF,50V
	C52	QCFA1HZ-104	CAPACITOR	0.1μF,50V
	C53	QCFA1HZ-104	CAPACITOR	0.1μF,50V
	C54	QCYA1EK-103	CAPACITOR	0.01μF,25V
	C55	QCYA1EK-103	CAPACITOR	0.01μF,25V
	C56	QETC1HM-105	E CAPACITOR	1μF,50V
	C57	QCYA1EK-103	CAPACITOR	0.01μF,25V
	C59	QCYA1EK-103	CAPACITOR	0.01μF,25V
	C60	QCFA1HZ-223	CAPACITOR	0.022μF,50V
	C61	QETC1AM-476	E CAPACITOR	47μF,10V
	C62	QCYA1EK-103	CAPACITOR	0.01μF,25V
	C63	QCYA1EK-103	CAPACITOR	0.01μF,25V
	C64	QETC1HM-105	E CAPACITOR	1μF,50V
	C65	QCYA1EK-103	CAPACITOR	0.01μF,25V
	C66	QCYA1EK-104	CAPACITOR	0.1μF,25V
	C67	QCYA1EK-103	CAPACITOR	0.01μF,25V
	C68	QCS31HJ-101	CAPACITOR	100pF,50V
	C69	QCYA1EK-103	CAPACITOR	0.01μF,25V
	C70	QCFA1HZ-104	CAPACITOR	0.1μF,50V
	C71	QCFA1HZ-104	CAPACITOR	0.1μF,50V
	C72	QETC1AM-476	E CAPACITOR	47μF,10V
	C73	QFN31HK-104	E CAPACITOR	0.1μF,50V
	C74	QFN31HJ-223	M CAPACITOR	0.022μF,50V
	C75	QETC1HM-335	E CAPACITOR	3.3μF,50V
	C76	QCS31HJ-330	CAPACITOR	33pF,50V
	C77	QAT3001-017	TRIMMER CAPACITOR	010μF
	C78	QETC1HM-105	E CAPACITOR	1μF,50V
	C79	QCYA1EK-103	CAPACITOR	0.01μF,25V
	C80	QCS31HJ-390	CAPACITOR	39pF,50V
	C81	QCS31HJ-470	CAPACITOR	47pF,50V
	C82	QETC1HM-105	E CAPACITOR	1μF,50V
	C83	QCFA1HZ-223	CAPACITOR	0.022μF,50V
	C84	QETC1AM-476	E CAPACITOR	47μF,10V
	C85	QCYA1EK-103	CAPACITOR	0.01μF,25V
	C86	QCYA1EK-103	CAPACITOR	0.01μF,25V
	C87	QCS31HJ-101	CAPACITOR	100pF,50V
	C88	QCS31HJ-101	CAPACITOR	100pF,50V
	C89	QETC1HM-475	E CAPACITOR	4.7μF,50V
	C90	QCFA1HZ-104	CAPACITOR	0.1μF,50V
	C91	QCFA1HZ-104	CAPACITOR	0.1μF,50V
	C92	QETC1CM-476	E CAPACITOR	47μF,16V
	C93	QCYA1EK-103	CAPACITOR	0.01μF,25V
	C94	QCFA1HZ-223	CAPACITOR	0.022μF,50V
	C95	QETC1CM-476	E CAPACITOR	47μF,16V
	C96	QCS31HJ-680	CAPACITOR	68pF,50V
	C97	QCS31HJ-560	CAPACITOR	56pF,50V
	C98	QCS31HJ-560	CAPACITOR	56pF,50V
	C99	QCS31HJ-151	CAPACITOR	150pF,50V
	C100	QETC1AM-476	E CAPACITOR	47μF,10V
	C101	QETC1CM-476	E CAPACITOR	47μF,16V
	C102	QCS31HJ-100	CAPACITOR	10pF,50V
	C103	QCS31HJ-101	CAPACITOR	100pF,50V
	C104	QEE80JM-476	TANTAL CAPACITOR	47μF,6.3V
	C105	QETC1CM-106	E CAPACITOR	10μF,16V
	C106	QETC1CM-476	E CAPACITOR	47μF,16V
	C107	QCFA1HZ-223	CAPACITOR	0.022μF,50V
	C108	QCYA1EK-103	CAPACITOR	0.01μF,25V
	C109	QETC1AM-476	E CAPACITOR	47μF,10V
	C110	QCFA1HZ-223	CAPACITOR	0.022μF,50V
	C112	QCYA1EK-103	CAPACITOR	0.01μF,25V
	C114	QCYA1EK-103	CAPACITOR	0.01μF,25V
	C115	QCYA1EK-103	CAPACITOR	0.01μF,25V
	C116	QCYA1EK-103	CAPACITOR	0.01μF,25V
	C117	QETC1HM-105	E CAPACITOR	1μF,50V
	C118	QCYA1EK-103	CAPACITOR	0.01μF,25V
	C119	QCFA1HZ-104	CAPACITOR	0.1μF,50V
	C120	QCFA1HZ-104	CAPACITOR	0.1μF,50V
	C121	QETC1AM-476	E CAPACITOR	47μF,10V
	C122	QCFA1HZ-104	CAPACITOR	0.1μF,50V
	C123	QCFA1HZ-223	CAPACITOR	0.022μF,50V
	C124	QETC1AM-476	E CAPACITOR	47μF,10V
	C125	QCFA1HZ-104	CAPACITOR	0.1μF,50V
	C126	QCFA1HZ-104	CAPACITOR	0.1μF,50V
	C127	QETC1AM-476	E CAPACITOR	47μF,10V
	C128	QCFA1HZ-223	CAPACITOR	0.022μF,50V
	C129	QCFA1HZ-104	CAPACITOR	0.1μF,50V
	C130	QFN31HJ-102	M CAPACITOR	0.001μF,50V
	C131	QFN31HJ-102	M CAPACITOR	0.001μF,50V
	C132	QCFA1HZ-104	CAPACITOR	0.1μF,50V
	C133	QFLC1HJ-102Z	M CAPACITOR	0.001μF,50V
	C134	QCT05CH-221	M CAPACITOR	220pF
	C135	QETC1HM-475	E CAPACITOR	4.7μF,50V
	C136	QFN31HJ-332	M CAPACITOR	0.0033μF,50V
	C137	QFN31HJ-473	M CAPACITOR	0.047μF,50V
	C138	QETC1HM-475	E CAPACITOR	4.7μF,50V
	C139	QETC1HM-475	E CAPACITOR	4.7μF,50V
	C140	QCYA1EK-103	CAPACITOR	0.01μF,25V
	C142	QETC1AM-476	E CAPACITOR	47μF,10V

#⚠	REF No.	PART No.	PART NAME, DESCRIPTION	
	C143	QCFA1HZ-223	CAPACITOR	0.022μF,50V
	C144	QCFA1HZ-104	CAPACITOR	0.1μF,50V
	C145	QFN31HJ-102	M CAPACITOR	0.001μF,50V
	C146	QCFA1HZ-104	CAPACITOR	0.1μF,50V
	C147	QFV71HJ-103	TF CAPACITOR	0.01μF,50V
	C148	QFN31HJ-102	M CAPACITOR	0.001μF,50V
	C149	QCFA1HZ-104	CAPACITOR	0.1μF,50V
	C150	QCFA1HZ-104	CAPACITOR	0.1μF,50V
	C151	QETC1AM-476	E CAPACITOR	47μF,10V
	C152	QCYA1EK-103	CAPACITOR	0.01μF,25V
	C153	QCFA1HZ-104	CAPACITOR	0.1μF,50V
	C154	QCFA1HZ-104	CAPACITOR	0.1μF,50V
	C155	QCYA1EK-103	CAPACITOR	0.01μF,25V
	C156	QCFA1HZ-223	CAPACITOR	0.022μF,50V
	C157	QETC1AM-476	E CAPACITOR	47μF,10V
	C158	QCYA1EK-103	CAPACITOR	0.01μF,25V
	C159	QCSA1HJ-221	CAPACITOR	220pF,50V
	C160	QETC1AM-476	E CAPACITOR	47μF,10V
	C161	QCFA1HZ-223	CAPACITOR	0.022μF,50V
	C162	QCYA1EK-103	CAPACITOR	0.01μF,25V
	C163	QCYA1EK-103	CAPACITOR	0.01μF,25V
	C164	QETC1CM-476	E CAPACITOR	47μF,16V
	C165	QCYA1EK-103	CAPACITOR	0.01μF,25V
	C166	QETC1AM-226	E CAPACITOR	22μF,10V
	C167	QCSA1HJ-390	CAPACITOR	39pF,50V
	C168	QCSA1HJ-121	CAPACITOR	120pF,50V
	C170	QCYA1EK-103	CAPACITOR	0.01μF,25V
	C171	QCS31HJ-680	CAPACITOR	68pF,50V
	C172	QCYA1EK-103	CAPACITOR	0.01μF,25V
	C173	QCYA1EK-103	CAPACITOR	0.01μF,25V
	C174	QCYA1EK-103	CAPACITOR	0.01μF,25V
	C175	QCYA1EK-103	CAPACITOR	0.01μF,25V
	C176	QCYA1EK-103	CAPACITOR	0.01μF,25V
	C177	QETC1CM-476	E CAPACITOR	47μF,16V
	C178	QCYA1EK-103	CAPACITOR	0.01μF,25V
	C179	QCYA1EK-103	CAPACITOR	0.01μF,25V
	C180	QCYA1EK-103	CAPACITOR	0.01μF,25V
	C181	QCSA1HJ-330	CAPACITOR	33pF,50V
	C182	QCYA1EK-103	CAPACITOR	0.01μF,25V
	C183	QETC1CM-476	E CAPACITOR	47μF,16V
	C184	QFN31HJ-102	M CAPACITOR	0.001μF,50V
	C185	QETC1HM-335	E CAPACITOR	3.3μF,50V
	C186	QETC1CM-106	E CAPACITOR	10μF,16V
	C187	QETC1CM-336	E CAPACITOR	33μF,16V
	C188	QFLC1HJ-392Z	M CAPACITOR	0.0039μF,50V
	C189	QCYA1HK-152	CAPACITOR	0.0015μF,50V
	C190	QEE81VM-684	TANTAL CAPACITOR	0.68μF,35V
	C191	QETC1HM-334	E CAPACITOR	0.33μF,50V
	C192	QETC1AM-476	E CAPACITOR	47μF,10V
	C193	QCYA1EK-103	CAPACITOR	0.01μF,25V
	C194	QCSA1HJ-151	CAPACITOR	150pF,50V
	C195	QCSA1HJ-471	CAPACITOR	470pF,50V
	C196	QCFA1EZ-683	CAPACITOR	0.068μF,25V
	C197	QCYA1EK-103	CAPACITOR	0.01μF,25V
	C200	QFN41HK-103	M CAPACITOR	0.01μF,50V
	C205	QFN41HK-103	M CAPACITOR	0.01μF,50V
	C206	QFN41HK-103	M CAPACITOR	0.01μF,50V
	L1	PU48530-471J	COIL	470μH
	L2	PU48530-8R2J	COIL	8.2μH
	L3	PU48530-8R2J	COIL	8.2μH
	L4	PU48530-471J	COIL	470μH
	L5	PU48530-471J	COIL	470μH
	L6	PU48530-180J	COIL	18μH
	L7	PU48530-100J	COIL	10μH
	L8	PU48530-101J	COIL	100μH
	L9	PU48530-101J	COIL	100μH

#⚠	REF No.	PART No.	PART NAME, DESCRIPTION	
	L10	PU48530-390J	COIL	39μH
	L11	PU48530-5R6J	COIL	5.6μH
	L12	PU48530-6R8J	COIL	6.8μH
	L13	PU48530-6R8J	COIL	6.8μH
	L14	PU48530-471J	COIL	470μH
	L15	PU48530-471J	COIL	470μH
	L16	PU48530-221J	COIL	220μH
	L17	PU48530-221J	COIL	220μH
	L19	PU48530-100J	COIL	10μH
	LPF1	PGZ01085	LOW PASS FILTER	
	LPF2	PGZ00630	LOW PASS FILTER	
	BPF1	PGZ01739	BAND PASS FILTER	
	BPF2	PGZ01193	BAND PASS FILTER	
	BPF3	PU54410-2	BAND PASS FILTER	
	DL1	PGZ01553	DELAY LINE	
	DL2	PGZ01797	DELAY LINE	
	DL5	PGZ01556	DELAY LINE	
	DL7	PGZ01554	DELAY LINE	
⚠	X1	PGZ01464	CRYSTAL RESONATOR	
	EJ1	PGZ00582	EJECTOR, ×2	
	RV1	PU53276	PLASTIC RIVET, ×4	
	SCW1	LPSP2616Z	SCREW, ×2	
	SCW2	WNS2600N	WASHER, ×2	
	SCW3	NNS2600N	NUT, ×2	
	SLD1	PRD30781-01-03	SHIELD PLATE	
	TP1	PU54983	TEST PIN, ×23	
	CN1	PGZ00421-44	MALE CONNECTOR	
	CN2	PGZ00421-44	MALE CONNECTOR	

- R/P COLOR SUB BOARD ASSEMBLY -

	PWBA	PRK20184A	R/P COLOR SUB BOARD ASSY	
	R341	QRSA08J-102YN	RESISTOR	1kΩ,1/10W
	C203	QCTA1CH-121	CAPACITOR	120pF,16V

- BUFFER BOARD ASSEMBLY -

	PWBA	PRK20189A	BUFFER BOARD ASSY	

#⚠REF No.	PART No.	PART NAME, DESCRIPTION	
Q73	2SC2412K(RS)	TRANSISTOR	
R343	QRSA08J-223YN	RESISTOR	22kΩ,1/10W
R344	QRSA08J-103YN	RESISTOR	10kΩ,1/10W
R345	QRSA08J-152YN	RESISTOR	1.5kΩ,1/10W
C204	QCYA1EK-103	CAPACITOR	0.01μF,25V

- BURST GATE BOARD ASSEMBLY -

#⚠REF No.	PART No.	PART NAME, DESCRIPTION	
PWBA	PRK20188A	BURST GATE BOARD ASSY	
IC20	TC74HC4538AF	IC	
IC21	NJM567M	IC	
Q20	DTC144EK	TRANSISTOR	
Q21	DTC144EK	TRANSISTOR	
R20	QRSA08J-472YN	RESISTOR	4.7kΩ,1/10W
R21	QRSA08J-102YN	RESISTOR	1kΩ,1/10W
R22	QRSA08J-222YN	RESISTOR	2.2kΩ,1/10W
R23	QRSA08J-103YN	RESISTOR	10kΩ,1/10W
R24	QRSA08J-473YN	RESISTOR	47kΩ,1/10W
R25	QRSA08J-472YN	RESISTOR	4.7kΩ,1/10W
R26	QRSA08J-103YN	RESISTOR	10kΩ,1/10W
R27	NVP1415-502N	V RESISTOR	5kΩ,1/4W
C20	QCYA1HK-182	CAPACITOR	0.0018μF,50V
C21	QCYA1HJ-102	CAPACITOR	0.001μF,50V
C22	QCYA1HK-153	CAPACITOR	0.015μF,50V
C23	NEH11CM-476NP	E CAPACITOR	47μF,16V
C24	QCYA1EK-223	CAPACITOR	0.022μF,25V
C25	QFN41HK-103	M CAPACITOR	0.01μF,50V
C26	NEH11HM-225NZ	E CAPACITOR	2.2μF,50V
C27	NEH11HM-105NZ	E CAPACITOR	1μF,50V
C28	QCYA1EK-104	CAPACITOR	0.1μF,25V
TP201	PU56008	TEST-PIN, ×2	

R/P COLOR-2 BOARD ASSEMBLY<12>

#⚠REF No.	PART No.	PART NAME, DESCRIPTION	
PWBA	PRK20127A-01	R/P COLOR 2 BOARD ASSY	
STK1	PRD30072-65	STICKER	
IC301	M5278L05	IC	
IC302	M5278L12	IC	
IC303	M5278L05	IC	
IC304	M5278L12	IC	
IC311	SN16913P	IC	
IC312	AN607P	IC	
IC313	SN16913P	IC	
IC314	UPC319C	IC	
IC315	TC74HC04AP	IC	
IC317	AN607P	IC	
IC318	AN607P	IC	
IC319	AN3480K	IC	
IC320	BA7233	IC	
IC322	AN607P	IC	
IC323	8VT15	IC	
	or HMC-229	IC	
IC324	JCL0007	IC	
IC325	TA7348P	IC	
Q301	2SK656	FE TRANSISTOR	
Q302	2SC1740S(QRS)	TRANSISTOR	
Q303	2SC1740S(QRS)	TRANSISTOR	
Q304	2SC1740S(QRS)	TRANSISTOR	
Q305	2SC1740S(QRS)	TRANSISTOR	
Q306	2SC1740S(QRS)	TRANSISTOR	
Q307	2SC1740S(QRS)	TRANSISTOR	
Q308	2SK656	FE TRANSISTOR	
Q309	2SC1740S(QRS)	TRANSISTOR	
Q310	2SC1740S(QRS)	TRANSISTOR	
Q311	DTC144ES	TRANSISTOR	
Q312	2SC1740S(QRS)	TRANSISTOR	
Q313	2SC1740S(QRS)	TRANSISTOR	
Q314	2SC1740S(QRS)	TRANSISTOR	
Q315	2SC1740S(QRS)	TRANSISTOR	
Q316	2SC1740S(QRS)	TRANSISTOR	
Q317	2SC1740S(QRS)	TRANSISTOR	
Q326	2SA933S	TRANSISTOR	
Q327	2SC1740S(QRS)	TRANSISTOR	
Q328	2SC1740S(QRS)	TRANSISTOR	
Q329	2SC1740S(QRS)	TRANSISTOR	
Q330	2SC1740S(QRS)	TRANSISTOR	
Q331	2SA933S	TRANSISTOR	
Q332	2SC1740S(QRS)	TRANSISTOR	
Q333	2SA933S	TRANSISTOR	
Q334	2SC1740S(QRS)	TRANSISTOR	
Q335	2SC1740S(QRS)	TRANSISTOR	
Q336	2SC1740S(QRS)	TRANSISTOR	
D301	1SS133	DIODE	
D302	1SS133	DIODE	
D304	1SS133	DIODE	
D305	1SS133	DIODE	
D306	1SS133	DIODE	
D307	1SS133	DIODE	
R21	QVZ3513-102	V RESISTOR	1kΩ
R22	QVZ3513-472	V RESISTOR	4.7kΩ
R23	QVZ3513-102	V RESISTOR	1kΩ
R24	QVZ3513-222	V RESISTOR	2.2kΩ
R25	QVZ3513-102	V RESISTOR	1kΩ
R26	QVZ3513-221	V RESISTOR	220Ω
R27	QVZ3513-471	V RESISTOR	470Ω
R301	QRD161J-152	RESISTOR	1.5kΩ,1/6W
R302	QRD161J-103	RESISTOR	10kΩ,1/6W
R303	QRD161J-223	RESISTOR	22kΩ,1/6W
R304	QRD161J-152	RESISTOR	1.5kΩ,1/6W
R305	QRD161J-273	RESISTOR	27kΩ,1/6W
R306	QRD161J-183	RESISTOR	18kΩ,1/6W
R307	QRD161J-102	RESISTOR	1kΩ,1/6W
R308	QRD161J-102	RESISTOR	1kΩ,1/6W
R309	QRD161J-273	RESISTOR	27kΩ,1/6W
R310	QRD161J-183	RESISTOR	18kΩ,1/6W

#△REF No.	PART No.	PART NAME,	DESCRIPTION
R311	QRD161J-102	RESISTOR	1kΩ,1/6W
R312	QRD161J-222	RESISTOR	2.2kΩ,1/6W
R313	QRD161J-102	RESISTOR	1kΩ,1/6W
R314	QRD161J-103	RESISTOR	10kΩ,1/6W
R315	QRD161J-223	RESISTOR	22kΩ,1/6W
R316	QRD161J-472	RESISTOR	4.7kΩ,1/6W
R317	QRD161J-223	RESISTOR	22kΩ,1/6W
R318	QRD161J-273	RESISTOR	27kΩ,1/6W
R319	QRD161J-152	RESISTOR	1.5kΩ,1/6W
R320	QRD161J-561	RESISTOR	560Ω,1/6W
R321	QRD161J-561	RESISTOR	560Ω,1/6W
R322	QRD161J-0R0	RESISTOR	0Ω,1/6W
R323	QRD161J-392	RESISTOR	3.9kΩ,1/6W
R324	QRD161J-152	RESISTOR	1.5kΩ,1/6W
R325	QRD161J-103	RESISTOR	10kΩ,1/6W
R326	QRD161J-223	RESISTOR	22kΩ,1/6W
R327	QRD161J-152	RESISTOR	1.5kΩ,1/6W
R328	QRD161J-222	RESISTOR	2.2kΩ,1/6W
R329	QRD161J-102	RESISTOR	1kΩ,1/6W
R330	QRD161J-333	RESISTOR	33kΩ,1/6W
R331	QRD161J-153	RESISTOR	15kΩ,1/6W
R332	QRD161J-152	RESISTOR	1.5kΩ,1/6W
R333	QRD161J-152	RESISTOR	1.5kΩ,1/6W
R334	QRD161J-102	RESISTOR	1kΩ,1/6W
R335	QRD161J-102	RESISTOR	1kΩ,1/6W
R336	QRD161J-333	RESISTOR	33kΩ,1/6W
R337	QRD161J-153	RESISTOR	15kΩ,1/6W
R338	QRD161J-152	RESISTOR	1.5kΩ,1/6W
R339	QRD161J-152	RESISTOR	1.5kΩ,1/6W
R340	QRD161J-333	RESISTOR	33kΩ,1/6W
R341	QRD161J-223	RESISTOR	22kΩ,1/6W
R342	QRD161J-273	RESISTOR	27kΩ,1/6W
R343	QRD161J-222	RESISTOR	2.2kΩ,1/6W
R344	QRD161J-181	RESISTOR	180Ω,1/6W
R345	QRD161J-223	RESISTOR	22kΩ,1/6W
R346	QRD161J-222	RESISTOR	2.2kΩ,1/6W
R347	QRD161J-222	RESISTOR	2.2kΩ,1/6W
R348	QRD161J-391	RESISTOR	390Ω,1/6W
R349	QRD161J-391	RESISTOR	390Ω,1/6W
R350	QRD161J-392	RESISTOR	3.9kΩ,1/6W
R351	QRD161J-333	RESISTOR	33kΩ,1/6W
R352	QRD161J-103	RESISTOR	10kΩ,1/6W
R354	QRD161J-102	RESISTOR	1kΩ,1/6W
R355	QRD161J-182	RESISTOR	1.8kΩ,1/6W
R356	QRD161J-391	RESISTOR	390Ω,1/6W
R357	QRD161J-391	RESISTOR	390Ω,1/6W
R358	QRD161J-392	RESISTOR	3.9kΩ,1/6W
R359	QRD161J-333	RESISTOR	33kΩ,1/6W
R360	QRD161J-103	RESISTOR	10kΩ,1/6W
R362	QRD161J-102	RESISTOR	1kΩ,1/6W
R363	QRD161J-182	RESISTOR	1.8kΩ,1/6W
R364	QRD161J-332	RESISTOR	3.3kΩ,1/6W
R365	QRD161J-102	RESISTOR	1kΩ,1/6W
R366	QRD161J-102	RESISTOR	1kΩ,1/6W
R367	QRD161J-102	RESISTOR	1kΩ,1/6W
R368	QRV141F-1101AY	RESISTOR	1.10kΩ,1/4W
R373	QRD161J-391	RESISTOR	390Ω,1/6W
R374	QRD161J-0R0	RESISTOR	0Ω,1/6W
R375	QRD161J-331	RESISTOR	330Ω,1/6W
R376	QRD161J-223	RESISTOR	22kΩ,1/6W
R398	QRD161J-393	RESISTOR	39kΩ,1/6W
R399	QRD161J-103	RESISTOR	10kΩ,1/6W
R400	QRD161J-102	RESISTOR	1kΩ,1/6W
R401	QRD161J-391	RESISTOR	390Ω,1/6W
R402	QRD161J-102	RESISTOR	1kΩ,1/6W

#△REF No.	PART No.	PART NAME,	DESCRIPTION
R403	QRD161J-102	RESISTOR	1kΩ,1/6W
R404	QRD161J-102	RESISTOR	1kΩ,1/6W
R406	QRD161J-471	RESISTOR	470Ω,1/6W
R407	QRD161J-391	RESISTOR	390Ω,1/6W
R408	QRD161J-152	RESISTOR	1.5kΩ,1/6W
R409	QRD161J-392	RESISTOR	3.9kΩ,1/6W
R410	QRD161J-393	RESISTOR	39kΩ,1/6W
R411	QRD161J-103	RESISTOR	10kΩ,1/6W
R412	QRD161J-392	RESISTOR	3.9kΩ,1/6W
R413	QRD161J-102	RESISTOR	1kΩ,1/6W
R414	QRD161J-102	RESISTOR	1kΩ,1/6W
R415	QRD161J-682	RESISTOR	6.8kΩ,1/6W
R416	QRD161J-101	RESISTOR	100Ω,1/6W
R417	QRD161J-182	RESISTOR	1.8kΩ,1/6W
R418	QRD161J-272	RESISTOR	2.7kΩ,1/6W
R419	QRD161J-472	RESISTOR	4.7kΩ,1/6W
R420	QRD161J-472	RESISTOR	4.7kΩ,1/6W
R421	QRV141F-1301AY	CMF RESISTOR	1.30kΩ,1/4W
R422	QRD161J-103	RESISTOR	10kΩ,1/6W
R423	QRD161J-332	RESISTOR	3.3kΩ,1/6W
R424	QRD161J-471	RESISTOR	470Ω,1/6W
R425	QRD161J-391	RESISTOR	390Ω,1/6W
R426	QRD161J-102	RESISTOR	1kΩ,1/6W
R427	QRD161J-331	RESISTOR	330Ω,1/6W
R428	QRD161J-682	RESISTOR	6.8kΩ,1/6W
R429	QRD161J-222	RESISTOR	2.2kΩ,1/6W
R430	QRD161J-223	RESISTOR	22kΩ,1/6W
R432	QRD161J-181	RESISTOR	180Ω,1/6W
R433	QRD161J-681	RESISTOR	680Ω,1/6W
R434	QRD161J-0R0	RESISTOR	0Ω,1/6W
R435	QRD161J-0R0	RESISTOR	0Ω,1/6W
R436	QRD161J-181	RESISTOR	180Ω,1/6W
R437	QRD161J-103	RESISTOR	10kΩ,1/6W
R438	QRD161J-680	RESISTOR	68Ω,1/6W
R439	QRD161J-222	RESISTOR	2.2kΩ,1/6W
R440	QRD161J-222	RESISTOR	2.2kΩ,1/6W
R441	QRD161J-331	RESISTOR	330Ω,1/6W
C301	QCZ0208-104	CAPACITOR	0.1μF
C302	QCZ0208-104	CAPACITOR	0.1μF
C303	QETC1AM-476	E CAPACITOR	47μF,10V
C304	QFN31HJ-103	M CAPACITOR	0.01μF,50V
C305	QCF31HP-102	CAPACITOR	0.001μF,50V
C306	QFN31HJ-103	M CAPACITOR	0.01μF,50V
C307	QFN31HJ-103	M CAPACITOR	0.01μF,50V
C308	QFN31HJ-103	M CAPACITOR	0.01μF,50V
C309	QFN31HJ-103	M CAPACITOR	0.01μF,50V
C310	QFN31HJ-103	M CAPACITOR	0.01μF,50V
C311	QFN31HJ-103	M CAPACITOR	0.01μF,50V
C312	QFN31HJ-103	M CAPACITOR	0.01μF,50V
C313	QCS31HJ-101	CAPACITOR	100pF,50V
C314	QCF31HP-223	CAPACITOR	0.022μF,50V
C315	QETC1AM-476	E CAPACITOR	47μF,10V
C316	QCF31HP-102	CAPACITOR	0.001μF,50V
C317	QFN31HJ-103	M CAPACITOR	0.01μF,50V
C318	QFN31HJ-103	M CAPACITOR	0.01μF,50V
C319	QFN31HJ-103	M CAPACITOR	0.01μF,50V
C320	QFN31HJ-103	M CAPACITOR	0.01μF,50V
C321	QCF31HP-102	CAPACITOR	0.001μF,50V
C322	QFN31HJ-103	M CAPACITOR	0.01μF,50V
C323	QFN31HJ-103	M CAPACITOR	0.01μF,50V
C324	QFN31HJ-103	M CAPACITOR	0.01μF,50V
C325	QFN31HJ-103	M CAPACITOR	0.01μF,50V
C326	QFN31HJ-103	M CAPACITOR	0.01μF,50V
C327	QCS31HJ-101	CAPACITOR	100pF,50V
C328	QCF31HP-223	CAPACITOR	0.022μF,50V
C329	QETC1AM-476	E CAPACITOR	47μF,10V

#⚠REF No.	PART No.	PART NAME, DESCRIPTION	
C330	QFN31HJ-104	M CAPACITOR	0.1μF,50V
C331	QFN31HJ-104	M CAPACITOR	0.1μF,50V
C332	QETC1CM-476	E CAPACITOR	47μF,16V
C333	QCZ0208-104	CAPACITOR	0.1μF
C334	QCZ0208-104	CAPACITOR	0.1μF
C335	QETC1CM-476	E CAPACITOR	47μF,16V
C336	QFN31HJ-103	M CAPACITOR	0.01μF,50V
C337	QFN31HJ-103	M CAPACITOR	0.01μF,50V
C338	QFN31HJ-103	M CAPACITOR	0.01μF,50V
C339	QFN31HJ-103	M CAPACITOR	0.01μF,50V
C340	QFN31HJ-103	M CAPACITOR	0.01μF,50V
C341	QFN31HJ-103	M CAPACITOR	0.01μF,50V
C342	QFN31HJ-103	M CAPACITOR	0.01μF,50V
C343	QFN31HJ-103	M CAPACITOR	0.01μF,50V
C344	QFN31HJ-103	M CAPACITOR	0.01μF,50V
C345	QCF31HP-223	CAPACITOR	0.022μF,50V
C346	QCZ0208-104	CAPACITOR	0.1μF
C347	QCZ0208-104	CAPACITOR	0.1μF
C348	QETC1AM-476	E CAPACITOR	47μF,10V
C349	QFN31HJ-103	M CAPACITOR	0.01μF,50V
C350	QFN31HJ-103	M CAPACITOR	0.01μF,50V
C351	QFN31HJ-103	M CAPACITOR	0.01μF,50V
C352	QFN31HJ-103	M CAPACITOR	0.01μF,50V
C353	QFN31HJ-103	M CAPACITOR	0.01μF,50V
C354	QFN31HJ-103	M CAPACITOR	0.01μF,50V
C355	QFN31HJ-103	M CAPACITOR	0.01μF,50V
C357	QFN31HJ-103	M CAPACITOR	0.01μF,50V
C358	QFN31HJ-103	M CAPACITOR	0.01μF,50V
C359	QFN31HJ-103	M CAPACITOR	0.01μF,50V
C360	QCS31HJ-101	CAPACITOR	100pF,50V
C361	QFN31HJ-103	M CAPACITOR	0.01μF,50V
C362	QFN31HJ-223	M CAPACITOR	0.022μF,50V
C363	QETC1CM-476	E CAPACITOR	47μF,16V
C364	QCS31HJ-271	CAPACITOR	270pF,50V
C365	QCZ0208-104	CAPACITOR	0.1μF
C366	QETC1HM-105	CAPACITOR	1μF,50V
C367	QCZ0208-104	CAPACITOR	0.1μF
C368	QCZ0208-104	CAPACITOR	0.1μF
C369	QETC1CM-476	E CAPACITOR	47μF,16V
C379	QETC1CM-476	E CAPACITOR	47μF,16V
C380	QCS31HJ-681	CAPACITOR	680pF,50V
C381	QETC1CM-476	E CAPACITOR	47μF,16V
C382	QCS31HJ-471	CAPACITOR	470pF,50V
C383	QETC1CM-476	E CAPACITOR	47μF,16V
C384	QCF31HP-223	CAPACITOR	0.022μF,50V
C385	QETC1CM-476	E CAPACITOR	47μF,16V
C386	QFN31HJ-103	M CAPACITOR	0.01μF,50V
C387	QFN31HJ-103	M CAPACITOR	0.01μF,50V
C388	QFN31HJ-103	M CAPACITOR	0.01μF,50V
C389	QFN31HJ-332	M CAPACITOR	0.0033μF,50V
C390	QFN31HJ-332	M CAPACITOR	0.0033μF,50V
C391	QFN31HJ-104	M CAPACITOR	0.1μF,50V
C392	QCS31HJ-151	CAPACITOR	150pF,50V
C393	QFN31HJ-103	M CAPACITOR	0.01μF,50V
C394	QFN31HJ-103	M CAPACITOR	0.01μF,50V
C395	QFN31HJ-103	M CAPACITOR	0.01μF,50V
C396	QFN31HJ-103	M CAPACITOR	0.01μF,50V
L301	PU48530-100J	COIL	10μH
L302	PU48530-100J	COIL	10μH
L304	PU48530-8R2J	COIL	8.2μH
L305	PGZ00973	COIL	
L306	PU48530-8R2J	COIL	8.2μH
L307	PGZ00973	COIL	
L308	PGZ00973	COIL	
L309	PU48530-8R2J	COIL	8.2μH

#⚠REF No.	PART No.	PART NAME, DESCRIPTION	
L312	PU48530-680J	COIL	68μH
L313	PU48530-680J	COIL	68μH
L315	PU48530-471J	COIL	470μH
L316	PU48530-390J	COIL	39μH
EQ301	PGZ01196	EQUALIZE	
DL301	PGZ01558	DELAY LINE	
DL302	PGZ01559	DELAY LINE	
DL304	PGZ00974-02	DELAY LINE	
DL305	PGZ00487	DELAY LINE	
SW301	YU40137	SLIDE SWITCH	
SW302	YU40137	SLIDE SWITCH	
SW303	YU40137	SLIDE SWITCH	
TH301	ERT-D2FGL601S	THERMISTOR	
TH302	ERT-D2FGL601S	THERMISTOR	
TH303	ERT-D2FGL301S	THERMISTOR	
EJ1	PGZ00582	EJECTOR, ×2	
RV1	PU53276	PLASTIC RIVET, ×4	
SLD1	PRD30781-01-03	SHIELD PLATE	
TP31	PU54983	TEST PIN, ×22	
CN1	PGZ00421-44	MALE CONNECTOR	
CN2	PGZ00421-44	MALE CONNECTOR	

- BURST SWITCH BOARD ASSEMBLY -

#⚠REF No.	PART No.	PART NAME, DESCRIPTION	
PWBA	PRK20187A	BURST SWITCH BOARD ASSY	
IC1	TA7347P	IC	
IC2	TA7347P	IC	
Q1	DTC144EK	TRANSISTOR	
Q2	2SC2412K(RS)	TRANSISTOR	
Q3	2SA1037K(QR)	TRANSISTOR	
Q4	2SC2412K(RS)	TRANSISTOR	
Q5	2SC2412K(RS)	TRANSISTOR	
R1	QRSA08J-103YN	RESISTOR	10kΩ,1/10W
R2	QRSA08J-181YN	RESISTOR	180Ω,1/10W
R3	QRSA08J-152YN	RESISTOR	1.5kΩ,1/10W
R4	QRSA08J-152YN	RESISTOR	1.5kΩ,1/10W
R5	QRSA08J-102YN	RESISTOR	1kΩ,1/10W
R6	QRSA08J-102YN	RESISTOR	1kΩ,1/10W
R7	QRSA08J-183YN	RESISTOR	18kΩ,1/10W
R8	QRSA08J-103YN	RESISTOR	10kΩ,1/10W
R9	QRSA08J-102YN	RESISTOR	1kΩ,1/10W
R10	QRSA08J-271YN	RESISTOR	270Ω,1/10W
R11	QRSA08J-183YN	RESISTOR	18kΩ,1/10W

#△REF No.	PART No.	PART NAME, DESCRIPTION	
R12	QRSA08J-103YN	RESISTOR	10kΩ,1/10W
R13	QVZ3513-102	V RESISTOR	1kΩ
R14	QVZ3513-102	V RESISTOR	1kΩ
C1	QCYA1EK-103	CAPACITOR	0.01μF,25V
C2	QCYA1EK-103	CAPACITOR	0.01μF,25V
C3	QCTA1CH-101	CAPACITOR	100pF,16V
C4	QCYA1EK-103	CAPACITOR	0.01μF,25V
C5	QCFA1HZ-104	CAPACITOR	0.1μF,50V
C6	QCFA1HZ-104	CAPACITOR	0.1μF,50V
C7	QCYA1EK-103	CAPACITOR	0.01μF,25V
L1	PU48530-471K	COIL	470μH
L2	PU48530-471K	COIL	470μH
SW1	PU54440	SWITCH	
CN1	QMV5001-007	HOUSING	

PRE/REC BOARD ASSEMBLY<15>

#△REF No.	PART No.	PART NAME, DESCRIPTION	
PWBA	PRK30072A-03	PRE/REC BOARD ASSY	
IC1	M5278L05M	IC	
IC2	UPC2320GS	IC	
Q1	IMD2	TRANSISTOR	
Q2	IMH5	TRANSISTOR	
Q3	2SD601(Q)	TRANSISTOR	
R1	QRSA08J-103YN	RESISTOR	10kΩ,1/10W
R2	QRSA08J-102YN	RESISTOR	1kΩ,1/10W
R3	QRSA08J-103YN	RESISTOR	10kΩ,1/10W
R4	QRSA08J-221YN	RESISTOR	220Ω,1/10W
R5	QRSA08J-102YN	RESISTOR	1kΩ,1/10W
R6	QRSA08J-331YN	RESISTOR	330Ω,1/10W
R7	QRSA08J-101YN	RESISTOR	100Ω,1/10W
R8	QRSA08J-220YN	RESISTOR	22Ω,1/10W
R9	QRSA08J-3R9YN	RESISTOR	3.9Ω,1/10W
R10	QRSA08J-3R9YN	RESISTOR	3.9Ω,1/10W
R11	QRSA08J-220YN	RESISTOR	22Ω,1/10W
R12	QRSA08J-220YN	RESISTOR	22Ω,1/10W
R13	QRSA08J-3R9YN	RESISTOR	3.9Ω,1/10W
R14	QRSA08J-3R9YN	RESISTOR	3.9Ω,1/10W
R15	QRSA08J-220YN	RESISTOR	22Ω,1/10W
R16	QRSA08J-6R8YN	RESISTOR	6.8Ω,1/10W
R17	QRSA08J-680YN	RESISTOR	68Ω,1/10W
C1	QEF81AM-336	TANTAL CAPACITOR	33μF,10V
C2	QCFA1EZ-104	CAPACITOR	0.1μF,25V
C3	QCFA1EZ-104	CAPACITOR	0.1μF,25V
C4	QCYA1EK-104	CAPACITOR	0.1μF,25V
C5	QCFA1EZ-104	CAPACITOR	0.1μF,25V
C6	QCFA1EZ-104	CAPACITOR	0.1μF,25V
C7	QCFA1EZ-104	CAPACITOR	0.1μF,25V
C8	QEF81EM-474	TANTAL CAPACITOR	0.47μF,25V
C9	QCYA1HK-473	CAPACITOR	0.047μF,50V
C10	QCFA1EZ-104	CAPACITOR	0.1μF,25V
C11	QEF81EM-474	TANTAL CAPACITOR	0.47μF,25V
C12	QCYA1HK-222	CAPACITOR	0.0022μF,50V
C13	QCYA1HK-222	CAPACITOR	0.0022μF,50V
C14	QEF81EM-474	TANTAL CAPACITOR	0.47μF,25V
C15	QEF81EM-474	TANTAL CAPACITOR	0.47μF,25V
C16	QRSA08J-0R0Y	CAPACITOR	0pF
C17	QRSA08J-0R0Y	CAPACITOR	0pF
C18	QEF81EM-474	TANTAL CAPACITOR	0.47μF,25V
C19	QCFA1EZ-104	CAPACITOR	0.1μF,25V
C20	QCFA1EZ-104	CAPACITOR	0.1μF,25V
C21	QEF80JM-106	TANTAL CAPACITOR	10μF,6.3V
C22	QEF81CM-225	TANTAL CAPACITOR	2.2μF,16V
L1	YU41135-221K	COIL	220μH

R/P ADJUST BOARD ASSEMBLY<16>

#△REF No.	PART No.	PART NAME, DESCRIPTION
PWBA	PGE20351C-02	R/P ADJ BOARD ASSY
STK1	PRD30072-56	STICKER
IC1	M5278L12	IC
IC2	M5278L09	IC
IC3	M5278L05	IC
IC4	M5278L05	IC
IC5	M5278L12	IC
IC6	M5278L12	IC
IC7	M5278L05	IC
IC8	M5278L09	IC
IC9	M5278L12	IC
IC11	8VT15	IC
IC12	8VT15	IC
IC13	TC4053BP	IC
IC14	TC74HC04AP	IC
IC15	TC4013BP	IC
IC16	TC4073BP	IC
IC17	AN6393	IC
IC18	TC4052BP	IC
IC20	AN607P	IC
IC21	TA7347P	IC
IC22	TC4053BP	IC
IC23	AN3398	IC
IC24	TC74HC00AP	IC
IC25	AN3370K	IC
IC26	AN3370K	IC
IC27	AN607P	IC
IC28	AN607P	IC
IC29	AN607P	IC
Q1	2SC1740S(QRS)	TRANSISTOR
Q2	2SC1740S(QRS)	TRANSISTOR
Q3	2SK656	FE TRANSISTOR
Q4	2SK656	FE TRANSISTOR
Q5	DTC144EF	TRANSISTOR
Q6	2SC1740S(QRS)	TRANSISTOR
Q7	2SC1740S(QRS)	TRANSISTOR
Q8	2SC1740S(QRS)	TRANSISTOR
Q9	2SC1740S(QRS)	TRANSISTOR
Q10	2SC1740S(QRS)	TRANSISTOR
Q11	2SC1740S(QRS)	TRANSISTOR
Q12	2SC1740S(QRS)	TRANSISTOR
Q13	2SC1740S(QRS)	TRANSISTOR
Q14	2SC1740S(QRS)	TRANSISTOR
Q15	2SK656	FE TRANSISTOR

#△REF No.	PART No.	PART NAME, DESCRIPTION
Q16	2SC1740S(QRS)	TRANSISTOR
Q17	2SA933S(RS)	TRANSISTOR
Q18	DTA144EF	TRANSISTOR
Q19	DTC144EF	TRANSISTOR
Q20	DTC144EF	TRANSISTOR
Q21	DTC144EF	TRANSISTOR
Q22	DTC144EF	TRANSISTOR
Q23	DTC144ES	TRANSISTOR
Q24	DTC144ES	TRANSISTOR
Q27	DTC144EF	TRANSISTOR
Q28	2SB641Q,R	TRANSISTOR
Q29	2SC1740S(QRS)	TRANSISTOR
Q30	2SA933S(RS)	TRANSISTOR
Q31	2SK656	FE TRANSISTOR
Q32	2SC1740S(QRS)	TRANSISTOR
Q33	2SC1740S(QRS)	TRANSISTOR
Q34	2SC1740S(QRS)	TRANSISTOR
Q36	2SC1740S(QRS)	TRANSISTOR
Q37	2SC1740S(QRS)	TRANSISTOR
Q38	2SC1740S(QRS)	TRANSISTOR
Q40	2SC1740S(QRS)	TRANSISTOR
Q41	2SC1740S(QRS)	TRANSISTOR
Q42	2SC1740S(QRS)	TRANSISTOR
Q43	2SC1740S(QRS)	TRANSISTOR
Q44	2SC1740S(QRS)	TRANSISTOR
Q45	2SC1740S(QRS)	TRANSISTOR
Q46	2SC1740S(QRS)	TRANSISTOR
Q47	2SC1740S(QRS)	TRANSISTOR
Q48	2SC1740S(QRS)	TRANSISTOR
Q49	2SC1740S(QRS)	TRANSISTOR
Q50	2SK656	FE TRANSISTOR
Q51	2SK656	FE TRANSISTOR
Q52	2SK656	FE TRANSISTOR
Q53	2SK656	FE TRANSISTOR
Q54	2SK656	FE TRANSISTOR
Q55	2SK656	FE TRANSISTOR
Q56	2SK656	FE TRANSISTOR
Q57	2SK656	FE TRANSISTOR
Q58	2SK656	FE TRANSISTOR
Q59	2SK656	FE TRANSISTOR
Q60	2SC1740S(QRS)	TRANSISTOR
Q61	DTC144EF	TRANSISTOR
Q62	2SD637(QR)	TRANSISTOR
Q63	2SK656	FE TRANSISTOR
Q64	2SK656	FE TRANSISTOR
Q65	2SK656	FE TRANSISTOR
Q66	2SK656	FE TRANSISTOR
D1	1SS133	DIODE
D2	1SS133	DIODE
D4	1SS133	DIODE
D5	1SS133	DIODE
D6	1SS133	DIODE
D7	1SS133	DIODE
D8	1SS133	DIODE
D9	1SS133	DIODE
D10	1SS133	DIODE
D11	1SS133	DIODE
D12	1SS133	DIODE
D13	1SS133	DIODE
D14	1SS133	DIODE
D15	1SS133	DIODE
D16	1SS133	DIODE
D17	1SS133	DIODE
D18	1SS133	DIODE
D19	1SS133	DIODE
D20	1SS133	DIODE

#△REF No.	PART No.	PART NAME, DESCRIPTION	
D21	1SS133	DIODE	
D23	GL-3PR8	LE DIODE	
D24	1SS133	DIODE	
R1	QVPB610-102	V RESISTOR	1kΩ
R2	QVPB610-102	V RESISTOR	1kΩ
R3	QVPB610-102	V RESISTOR	1kΩ
R4	QVPB610-102	V RESISTOR	1kΩ
R5	QVZ3513-102	V RESISTOR	1kΩ
R6	QVZ3513-102	V RESISTOR	1kΩ
R7	QVZ3513-102	V RESISTOR	1kΩ
R8	QVZ3513-102	V RESISTOR	1kΩ
R9	QVZ3513-222	V RESISTOR	2.2kΩ
R10	QVZ3513-222	V RESISTOR	2.2kΩ
R11	QVZ3513-222	V RESISTOR	2.2kΩ
R12	QVZ3513-222	V RESISTOR	2.2kΩ
R13	QVPB610-202	V RESISTOR	2kΩ
R14	QVPB610-202	V RESISTOR	2kΩ
R15	QVPB610-202	V RESISTOR	2kΩ
R16	QVPB610-202	V RESISTOR	2kΩ
R17	QVZ3513-473	V RESISTOR	47kΩ
R101	QRD161J-181	RESISTOR	180Ω,1/6W
R102	QRD161J-333	RESISTOR	33kΩ,1/6W
R103	QRD161J-333	RESISTOR	33kΩ,1/6W
R104	QRD161J-332	RESISTOR	3.3kΩ,1/6W
R105	QRD161J-102	RESISTOR	1kΩ,1/6W
R107	QRD161J-102	RESISTOR	1kΩ,1/6W
R108	QRD161J-333	RESISTOR	33kΩ,1/6W
R109	QRD161J-123	RESISTOR	12kΩ,1/6W
R110	QRD161J-821	RESISTOR	820Ω,1/6W
R111	QRD161J-331	RESISTOR	330Ω,1/6W
R112	QRD161J-102	RESISTOR	1kΩ,1/6W
R113	QRD161J-123	RESISTOR	12kΩ,1/6W
R114	QRD161J-822	RESISTOR	8.2kΩ,1/6W
R115	QRD161J-122	RESISTOR	1.2kΩ,1/6W
R116	QRD161J-123	RESISTOR	12kΩ,1/6W
R117	QRD161J-822	RESISTOR	8.2kΩ,1/6W
R118	QRD161J-123	RESISTOR	12kΩ,1/6W
R120	QRD161J-333	RESISTOR	33kΩ,1/6W
R121	QRD161J-183	RESISTOR	18kΩ,1/6W
R122	QRD161J-102	RESISTOR	1kΩ,1/6W
R123	QRD161J-102	RESISTOR	1kΩ,1/6W
R124	QRD161J-272	RESISTOR	2.7kΩ,1/6W
R125	QRD161J-562	RESISTOR	5.6kΩ,1/6W
R126	QRD161J-332	RESISTOR	3.3kΩ,1/6W
R127	QRD161J-181	RESISTOR	180Ω,1/6W
R128	QRD161J-333	RESISTOR	33kΩ,1/6W
R129	QRD161J-333	RESISTOR	33kΩ,1/6W
R130	QRD161J-332	RESISTOR	3.3kΩ,1/6W
R131	QRD161J-561	RESISTOR	560Ω,1/6W
R132	QRD161J-221	RESISTOR	220Ω,1/6W
R133	QRD161J-471	RESISTOR	470Ω,1/6W
R134	QRD161J-221	RESISTOR	220Ω,1/6W
R135	QRD161J-102	RESISTOR	1kΩ,1/6W
R136	QRD161J-333	RESISTOR	33kΩ,1/6W
R137	QRD161J-123	RESISTOR	12kΩ,1/6W
R138	QRD161J-182	RESISTOR	1.8kΩ,1/6W
R139	QRD161J-102	RESISTOR	1kΩ,1/6W
R140	QRD161J-102	RESISTOR	1kΩ,1/6W
R141	QRD161J-333	RESISTOR	33kΩ,1/6W
R142	QRD161J-183	RESISTOR	18kΩ,1/6W
R143	QRD161J-102	RESISTOR	1kΩ,1/6W
R144	QRD161J-222	RESISTOR	2.2kΩ,1/6W
R145	QRD161J-392	RESISTOR	3.9kΩ,1/6W
R146	QRD161J-562	RESISTOR	5.6kΩ,1/6W
R147	QRD161J-332	RESISTOR	3.3kΩ,1/6W

<16>

#⚠REF No.	PART No.	PART NAME, DESCRIPTION	
R148	QRD161J-333	RESISTOR	33kΩ,1/6W
R149	QRD161J-183	RESISTOR	18kΩ,1/6W
R150	QRD161J-333	RESISTOR	33kΩ,1/6W
R151	QRD161J-183	RESISTOR	18kΩ,1/6W
R152	QRD161J-332	RESISTOR	3.3kΩ,1/6W
R153	QRD161J-332	RESISTOR	3.3kΩ,1/6W
R154	QRD161J-332	RESISTOR	3.3kΩ,1/6W
R155	QRD161J-153	RESISTOR	15kΩ,1/6W
R156	QRD161J-123	RESISTOR	12kΩ,1/6W
R157	QRD161J-153	RESISTOR	15kΩ,1/6W
R158	QRD161J-682	RESISTOR	6.8kΩ,1/6W
R159	QRD161J-103	RESISTOR	10kΩ,1/6W
R160	QRD161J-271	RESISTOR	270Ω,1/6W
R161	QRD161J-102	RESISTOR	1kΩ,1/6W
R162	QRD161J-680	RESISTOR	68Ω,1/6W
R163	QRD161J-682	RESISTOR	6.8kΩ,1/6W
R164	QRD161J-102	RESISTOR	1kΩ,1/6W
R165	QRD161J-104	RESISTOR	100kΩ,1/6W
R166	QRD161J-103	RESISTOR	10kΩ,1/6W
R167	QRD161J-103	RESISTOR	10kΩ,1/6W
R168	QRD161J-102	RESISTOR	1kΩ,1/6W
R169	QRD161J-472	RESISTOR	4.7kΩ,1/6W
R170	QRD161J-472	RESISTOR	4.7kΩ,1/6W
R171	QRD161J-333	RESISTOR	33kΩ,1/6W
R172	QRD161J-333	RESISTOR	33kΩ,1/6W
R173	QRD161J-0R0	RESISTOR	0Ω,1/6W
R174	QRD161J-0R0	RESISTOR	0Ω,1/6W
R175	QRD161J-333	RESISTOR	33kΩ,1/6W
R176	QRD161J-333	RESISTOR	33kΩ,1/6W
R177	QRD161J-103	RESISTOR	10kΩ,1/6W
R178	QRD161J-103	RESISTOR	10kΩ,1/6W
R179	QRD161J-103	RESISTOR	10kΩ,1/6W
R180	QRD161J-103	RESISTOR	10kΩ,1/6W
R182	QRD161J-272	RESISTOR	2.7kΩ,1/6W
R183	QRD161J-562	RESISTOR	5.6kΩ,1/6W
R184	QRD161J-332	RESISTOR	3.3kΩ,1/6W
R185	QRD161J-103	RESISTOR	10kΩ,1/6W
R186	QRD161J-103	RESISTOR	10kΩ,1/6W
R187	QRD161J-102	RESISTOR	1kΩ,1/6W
R188	QRD161J-333	RESISTOR	33kΩ,1/6W
R189	QRD161J-183	RESISTOR	18kΩ,1/6W
R190	QRD161J-181	RESISTOR	180Ω,1/6W
R192	QRD161J-102	RESISTOR	1kΩ,1/6W
R193	QRD161J-472	RESISTOR	4.7kΩ,1/6W
R194	QRD161J-152	RESISTOR	1.5kΩ,1/6W
R195	QRD161J-332	RESISTOR	3.3kΩ,1/6W
R196	QRD161J-102	RESISTOR	1kΩ,1/6W
R197	QRD161J-123	RESISTOR	12kΩ,1/6W
R198	QRD161J-822	RESISTOR	8.2kΩ,1/6W
R199	QRD161J-123	RESISTOR	12kΩ,1/6W
R200	QRD161J-333	RESISTOR	33kΩ,1/6W
R201	QRD161J-392	RESISTOR	3.9kΩ,1/6W
R202	QRD161J-332	RESISTOR	3.3kΩ,1/6W
R203	QRD161J-331	RESISTOR	330Ω,1/6W
R204	QRD161J-332	RESISTOR	3.3kΩ,1/6W
R206	QRD161J-332	RESISTOR	3.3kΩ,1/6W
R207	QRD161J-122	RESISTOR	1.2kΩ,1/6W
R208	QRD161J-122	RESISTOR	1.2kΩ,1/6W
R209	QRD161J-122	RESISTOR	1.2kΩ,1/6W
R210	QRD161J-122	RESISTOR	1.2kΩ,1/6W
R211	QRD161J-822	RESISTOR	8.2kΩ,1/6W
R212	QRD161J-123	RESISTOR	12kΩ,1/6W
R213	QRD161J-333	RESISTOR	33kΩ,1/6W
R214	QRD161J-123	RESISTOR	12kΩ,1/6W
R215	QRD161J-102	RESISTOR	1kΩ,1/6W
R216	QRD161J-102	RESISTOR	1kΩ,1/6W
R217	QRD161J-102	RESISTOR	1kΩ,1/6W

#⚠REF No.	PART No.	PART NAME, DESCRIPTION	
R218	QRD161J-222	RESISTOR	2.2kΩ,1/6W
R219	QRD161J-561	RESISTOR	560Ω,1/6W
R220	QRD161J-102	RESISTOR	1kΩ,1/6W
R221	QRD161J-332	RESISTOR	3.3kΩ,1/6W
R222	QRD161J-222	RESISTOR	2.2kΩ,1/6W
R223	QRD161J-122	RESISTOR	1.2kΩ,1/6W
R225	QRD161J-332	RESISTOR	3.3kΩ,1/6W
R226	QRD161J-102	RESISTOR	1kΩ,1/6W
R227	QRD161J-102	RESISTOR	1kΩ,1/6W
R228	QRD161J-333	RESISTOR	33kΩ,1/6W
R229	QRD161J-123	RESISTOR	12kΩ,1/6W
R230	QRD161J-102	RESISTOR	1kΩ,1/6W
R231	QRD161J-102	RESISTOR	1kΩ,1/6W
R232	QRD161J-561	RESISTOR	560Ω,1/6W
R233	QRD161J-152	RESISTOR	1.5kΩ,1/6W
R234	QRD161J-561	RESISTOR	560Ω,1/6W
R235	QRD161J-102	RESISTOR	1kΩ,1/6W
R236	QRD161J-332	RESISTOR	3.3kΩ,1/6W
R237	QRD161J-122	RESISTOR	1.2kΩ,1/6W
R238	QRD161J-122	RESISTOR	1.2kΩ,1/6W
R239	QRD161J-332	RESISTOR	3.3kΩ,1/6W
R240	QRD161J-681	RESISTOR	680Ω,1/6W
R241	QRD161J-332	RESISTOR	3.3kΩ,1/6W
R242	QRD161J-332	RESISTOR	3.3kΩ,1/6W
R243	QRD161J-332	RESISTOR	3.3kΩ,1/6W
R244	QRD161J-102	RESISTOR	1kΩ,1/6W
R245	QRD161J-332	RESISTOR	3.3kΩ,1/6W
R246	QRD161J-332	RESISTOR	3.3kΩ,1/6W
R247	QRD161J-222	RESISTOR	2.2kΩ,1/6W
R248	QRD161J-182	RESISTOR	1.8kΩ,1/6W
R249	QRD161J-750	RESISTOR	75Ω,1/6W
R250	QRD161J-563	RESISTOR	56kΩ,1/6W
R251	QRD161J-103	RESISTOR	10kΩ,1/6W
R252	QRD161J-103	RESISTOR	10kΩ,1/6W
R253	QRD161J-103	RESISTOR	10kΩ,1/6W
R254	QRD161J-153	RESISTOR	15kΩ,1/6W
R255	QRD161J-103	RESISTOR	10kΩ,1/6W
R256	QRD161J-103	RESISTOR	10kΩ,1/6W
R257	QRD161J-103	RESISTOR	10kΩ,1/6W
R258	QRD161J-103	RESISTOR	10kΩ,1/6W
R259	QRD161J-102	RESISTOR	1kΩ,1/6W
R260	QRD161J-153	RESISTOR	15kΩ,1/6W
R261	QRD161J-123	RESISTOR	12kΩ,1/6W
R262	QRD161J-153	RESISTOR	15kΩ,1/6W
R263	QRD161J-123	RESISTOR	12kΩ,1/6W
R264	QRD161J-153	RESISTOR	15kΩ,1/6W
R265	QRD161J-123	RESISTOR	12kΩ,1/6W
R267	QRD161J-153	RESISTOR	15kΩ,1/6W
R268	QRD161J-122	RESISTOR	1.2kΩ,1/6W
R269	QRD161J-103	RESISTOR	10kΩ,1/6W
R270	QRD161J-392	RESISTOR	3.9kΩ,1/6W
R271	QRD161J-332	RESISTOR	3.3kΩ,1/6W
R272	QRV141F-5101AY	RESISTOR	5.10kΩ,1/4W
R273	QRD161J-182	RESISTOR	1.8kΩ,1/6W
R274	QRD161J-103	RESISTOR	10kΩ,1/6W
R275	QRD161J-123	RESISTOR	12kΩ,1/6W
R276	QRD161J-822	RESISTOR	8.2kΩ,1/6W
R277	QRV141F-5101AY	RESISTOR	5.10kΩ,1/4W
R278	QRD161J-182	RESISTOR	1.8kΩ,1/6W
R279	QRD161J-103	RESISTOR	10kΩ,1/6W
R280	QRD161J-123	RESISTOR	12kΩ,1/6W
R281	QRD161J-822	RESISTOR	8.2kΩ,1/6W
R282	QRD161J-100	RESISTOR	10Ω,1/6W
R283	QRD161J-681	RESISTOR	680Ω,1/6W
R284	QRD161J-332	RESISTOR	3.3kΩ,1/6W
R285	QRD161J-103	RESISTOR	10kΩ,1/6W
R286	QRD161J-103	RESISTOR	10kΩ,1/6W

#⚠REF No.	PART No.	PART NAME,	DESCRIPTION
R287	QRD161J-102	RESISTOR	1kΩ,1/6W
R288	QRD161J-181	RESISTOR	180Ω,1/6W
R289	QRD161J-392	RESISTOR	3.9kΩ,1/6W
R290	QRD161J-392	RESISTOR	3.9kΩ,1/6W
R291	QRD161J-123	RESISTOR	12kΩ,1/6W
R292	QRD161J-153	RESISTOR	15kΩ,1/6W
R294	QRD161J-821	RESISTOR	820Ω,1/6W
R295	QRD161J-221	RESISTOR	220Ω,1/6W
R298	QRD161J-182	RESISTOR	1.8kΩ,1/6W
R300	QRD161J-101	RESISTOR	100Ω,1/6W
C1	QFN31HK-103	M CAPACITOR	0.01μF,50V
C2	QFN31HK-103	M CAPACITOR	0.01μF,50V
C4	QCS31HJ-151	CAPACITOR	150pF,50V
C6	QCS31HJ-180	CAPACITOR	18pF,50V
C7	QFN31HK-103	M CAPACITOR	0.01μF,50V
C8	QCC31CK-104	CAPACITOR	0.1μF,16V
C9	QFN31HK-103	M CAPACITOR	0.01μF,50V
C10	QCS31HJ-331	CAPACITOR	330pF,50V
C11	QCS31HJ-151	CAPACITOR	150pF,50V
C12	QCS31HJ-471	CAPACITOR	470pF,50V
C14	QFN31HK-103	M CAPACITOR	0.01μF,50V
C15	QCS11HJ-680	CAPACITOR	68pF,50V
C16	QFN31HK-103	M CAPACITOR	0.01μF,50V
C17	QCC31CK-104	CAPACITOR	0.1μF,16V
C18	QCS31HJ-470	CAPACITOR	47pF,50V
C19	QFN31HK-473	M CAPACITOR	0.047μF,50V
C20	QCS31HJ-221	CAPACITOR	220pF,50V
C21	QFN31HK-473	M CAPACITOR	0.047μF,50V
C22	QCC31CK-104	CAPACITOR	0.1μF,16V
C23	QCC31CK-104	CAPACITOR	0.1μF,16V
C24	QETC1CM-476	E CAPACITOR	47μF,16V
C25	QCC31EK-104	CAPACITOR	0.1μF,25V
C26	QCC31EK-104	CAPACITOR	0.1μF,25V
C27	QCC31CK-104	CAPACITOR	0.1μF,16V
C28	QETC1CM-476	E CAPACITOR	47μF,16V
C29	QCF31HP-103	CAPACITOR	0.01μF,50V
C30	QCS31HJ-181	CAPACITOR	180pF,50V
C31	QCS31HJ-181	CAPACITOR	180pF,50V
C32	QCC31CK-104	CAPACITOR	0.1μF,16V
C33	QETC1AM-476	E CAPACITOR	47μF,10V
C34	QCC31CK-104	CAPACITOR	0.1μF,16V
C35	QCC31CK-104	CAPACITOR	0.1μF,16V
C36	QCC31CK-104	CAPACITOR	0.1μF,16V
C37	QETC1AM-476	E CAPACITOR	47μF,10V
C38	QFN31HK-103	M CAPACITOR	0.01μF,50V
C39	QFN31HK-103	M CAPACITOR	0.01μF,50V
C40	QFN31HK-103	M CAPACITOR	0.01μF,50V
C41	QCS31HJ-560	CAPACITOR	56pF,50V
C42	QETC1HM-105	E CAPACITOR	1μF,50V
C43	QETC1HM-105	E CAPACITOR	1μF,50V
C44	QCS31HJ-471	CAPACITOR	470pF,50V
C45	QFN31HK-473	M CAPACITOR	0.047μF,50V
C46	QFN31HK-223	M CAPACITOR	0.022μF,50V
C47	QFN31HK-473	M CAPACITOR	0.047μF,50V
C48	QFN31HK-103	M CAPACITOR	0.01μF,50V
C49	QFN31HK-103	M CAPACITOR	0.01μF,50V
C50	QFN31HK-103	M CAPACITOR	0.01μF,50V
C51	QCC31CK-104	CAPACITOR	0.1μF,16V
C52	QETC1CM-476	E CAPACITOR	47μF,16V
C53	QCC31EK-104	CAPACITOR	0.1μF,25V
C54	QETC1HM-105	E CAPACITOR	1μF,50V
C55	QFN31HK-103	M CAPACITOR	0.01μF,50V
C56	QCC31CK-104	CAPACITOR	0.1μF,16V
C57	QCS31HJ-220	CAPACITOR	22pF,50V
C58	QFN31HK-103	M CAPACITOR	0.01μF,50V
C59	QFN31HK-103	M CAPACITOR	0.01μF,50V

#⚠REF No.	PART No.	PART NAME,	DESCRIPTION
C60	QFN31HK-682	M CAPACITOR	0.0068μF,50V
C61	QFN31HK-223	M CAPACITOR	0.022μF,50V
C62	QCS31HJ-561	CAPACITOR	560pF,50V
C63	QFN31HK-102	M CAPACITOR	0.001μF,50V
C64	QCS31HJ-390	CAPACITOR	39pF,50V
C65	QFN31HK-103	M CAPACITOR	0.01μF,50V
C66	QCS31HJ-271	CAPACITOR	270pF,50V
C67	QFN31HJ-102	M CAPACITOR	0.001μF,50V
C68	QCS31HJ-220	CAPACITOR	22pF,50V
C69	QFN31HK-103	M CAPACITOR	0.01μF,50V
C70	QFN31HK-103	M CAPACITOR	0.01μF,50V
C71	QCC31CK-104	CAPACITOR	0.1μF,16V
C72	QCS11HJ-330	CAPACITOR	33pF,50V
C73	QCS31HJ-100	CAPACITOR	10pF,50V
C74	QFN31HK-473	M CAPACITOR	0.047μF,50V
C75	QCS31HJ-101	CAPACITOR	100pF,50V
C76	QCS31HJ-101	CAPACITOR	100pF,50V
C77	QFN31HK-103	M CAPACITOR	0.01μF,50V
C78	QCC31CK-104	CAPACITOR	0.1μF,16V
C79	QCS11HJ-470	CAPACITOR	47pF,50V
C80	QCS31HJ-220	CAPACITOR	22pF,50V
C81	QFN31HK-473	M CAPACITOR	0.047μF,50V
C82	QCC31CK-104	CAPACITOR	0.1μF,16V
C83	QCS31HJ-120	CAPACITOR	12pF,50V
C84	QCS31HJ-470	CAPACITOR	47pF,50V
C85	QCC31CK-104	CAPACITOR	0.1μF,16V
C86	QETC1CM-476	E CAPACITOR	47μF,16V
C87	QCC31EK-104	CAPACITOR	0.1μF,25V
C88	QFN31HK-103	M CAPACITOR	0.01μF,50V
C89	QCS31HJ-7R0	CAPACITOR	7pF,50V
C90	QFN31HK-103	M CAPACITOR	0.01μF,50V
C91	QCC31CK-104	CAPACITOR	0.1μF,16V
C92	QCC31CK-104	CAPACITOR	0.1μF,16V
C93	QETC1AM-476	E CAPACITOR	47μF,10V
C94	QETC1HM-474	E CAPACITOR	0.47μF,50V
C95	QETC1HM-475	E CAPACITOR	4.7μF,50V
C96	QENC1HM-475	NP E CAPACITOR	4.7μF,50V
C97	QETC1HM-225	E CAPACITOR	2.2μF,50V
C98	QCC31CK-104	CAPACITOR	0.1μF,16V
C99	QETC1CM-476	E CAPACITOR	47μF,16V
C100	QCC31EK-104	CAPACITOR	0.1μF,25V
C101	QCS31HJ-680	CAPACITOR	68pF,50V
C102	QCS31HJ-680	CAPACITOR	68pF,50V
C103	QFN31HK-103	M CAPACITOR	0.01μF,50V
C104	QCC31CK-104	CAPACITOR	0.1μF,16V
C105	QFN31HK-103	M CAPACITOR	0.01μF,50V
C106	QCS31HJ-820	CAPACITOR	82pF,50V
C107	QCS31HJ-560	CAPACITOR	56pF,50V
C108	QCS31HJ-680	CAPACITOR	68pF,50V
C109	QCS31HJ-680	CAPACITOR	68pF,50V
C110	QFN31HK-103	M CAPACITOR	0.01μF,50V
C111	QCC31CK-104	CAPACITOR	0.1μF,16V
C112	QFN31HK-103	M CAPACITOR	0.01μF,50V
C113	QCS31HJ-820	CAPACITOR	82pF,50V
C114	QCS31HJ-560	CAPACITOR	56pF,50V
C115	QCC31CK-104	CAPACITOR	0.1μF,16V
C116	QETC1CM-476	E CAPACITOR	47μF,16V
C117	QCC31EK-104	CAPACITOR	0.1μF,25V
C118	QFN31HK-103	M CAPACITOR	0.01μF,50V
C119	QFN31HK-103	M CAPACITOR	0.01μF,50V
C120	QETC1AM-107	E CAPACITOR	100μF,10V
C121	QFN31HK-103	M CAPACITOR	0.01μF,50V
C124	QCS11HJ-220	CAPACITOR	22pF,50V
C125	QFN41HK-103	M CAPACITOR	0.01μF,50V
C126	QCS11HJ-470	CAPACITOR	47pF,50V
C127	QCS11HJ-470	CAPACITOR	47pF,50V
C129	QFN41HJ-223	M CAPACITOR	0.022μF,50V

#△	REF No.	PART No.	PART NAME, DESCRIPTION	
	C132	QCS11HJ-120	CAPACITOR	12pF,50V
	C133	QCS11HJ-121	CAPACITOR	120pF,50V
	C136	QCS11HJ-470	CAPACITOR	47pF,50V
	L2	PU48530-331J	COIL	330μH
	L4	PU48530-181J	COIL	180μH
	L5	PU48530-181J	COIL	180μH
	L6	PU48530-390J	COIL	39μH
	L7	PU48530-390J	COIL	39μH
	L8	PU48530-471J	COIL	470μH
	L9	PGZ00917-822	COIL	
	L10	PU48530-821J	COIL	820μH
	L11	PU48530-101J	COIL	100μH
	L12	PU48530-680J	COIL	68μH
	L13	PU48530-221J	COIL	220μH
	L14	PU48530-330J	COIL	33μH
	L15	PU48530-100J	COIL	10μH
	L16	PU48530-101J	COIL	100μH
	L17	PU48530-330J	COIL	33μH
	L18	PU48530-330J	COIL	33μH
	L19	PU48530-330J	COIL	33μH
	L20	PU48530-150J	COIL	15μH
	L21	PU48530-6R8J	COIL	6.8μH
	L22	PU48530-6R8J	COIL	6.8μH
	L23	PU48530-100J	COIL	10μH
	L27	PU48530-100J	COIL	10μH
	L28	PU48530-220J	COIL	22μH
	L29	PU48530-330J	COIL	33μH
	LPF	PGZ00630	LOW PASS FILTER	
	S1	PU54440	SWITCH	
△	K1	PGZ00354	FERRATE BEADS	
	EJ1	PGZ00582	EJECTOR, ×2	
	RV1	PU53276	PLASTIC RIVET, ×4	
	SLD1	PRD30781-02-03	SHIELD PLATE	
	TP1	PU54983	TEST PIN, ×19	
	CN1	PGZ00421-64	MALE CONNECTOR	

- R/P ADJUST SUB-1 BOARD ASSEMBLY -

#△	REF No.	PART No.	PART NAME, DESCRIPTION	
	PWBA	PRK30086A1	R/P ADJ SUB-1 BOARD ASSY	
	IC19	TA7348P	IC	
	IC30	AN607P	IC	
	R296	QRD161J-272	RESISTOR	2.7kΩ,1/6W
	C128	QCZ0208-104	CAPACITOR	0.1μF
	CN2	PGZ00190-009	CONNECTOR	

- R/P ADJUST SUB-2 BOARD ASSEMBLY -

#△	REF No.	PART No.	PART NAME, DESCRIPTION	
	PWBA	PRK30086A2	R/P ADJ SUB-2 BOARD ASSY	
	R191	QRD161J-102	RESISTOR	1kΩ,1/6W
	R297	QRD161J-122	RESISTOR	1.2kΩ,1/6W
	C131	QCS31HJ-121	CAPACITOR	120pF,50V
	L25	PU53223-471J	COIL	470μH
	CN3	PGZ00190-003	CONNECTOR	

- ADJUST SUB BOARD ASSEMBLY -

#△	REF No.	PART No.	PART NAME, DESCRIPTION	
	PWBA	PRK20185A	ADJ SUB BOARD ASSY	
	Q25	2SC2412K(RS)	TRANSISTOR	
	R181	QRSA08J-332YN	RESISTOR	3.3kΩ,1/10W
	R302	QRSA08J-181YN	RESISTOR	180Ω,1/10W
	R303	QRSA08J-471YN	RESISTOR	470Ω,1/10W
	C134	QCTA1CH-221	CAPACITOR	220pF,16V

Y COMB BOARD ASSEMBLY<17>

#△	REF No.	PART No.	PART NAME, DESCRIPTION	
	PWBA	PRK20125A-02	Y COMB BOARD ASSY	
	STK1	PRD30072-55	STICKER	
	IC1	M5278L12	IC	
	IC2	M5278L05	IC	
	IC3	M5278L12	IC	
	IC4	M5278L05	IC	
	IC5	M5278L12	IC	
	IC6	M5278L05	IC	
	IC7	M5278L05	IC	
	IC8	M5278L05	IC	
	IC9	M5278L05	IC	
	IC10	M5278L12	IC	
	IC11	M5278L05	IC	
	IC12	M5278L05	IC	
	IC13	M5278L05	IC	
	IC14	M5278L05	IC	

#⚠	REF No.	PART No.	PART NAME, DESCRIPTION
	IC15	M5278L05	IC
	IC21	TA7348P	IC
	IC22	8VT15	IC
		or HMC-229	IC
	IC23	AN3916	IC
	IC24	TA7347P	IC
	IC25	TA7347P	IC
	IC26	8VT15	IC
		or HMC-229	IC
	IC27	LA7222	IC
	IC28	JCL0009	IC
	IC29	M51957BL	IC
	IC30	TC7W04F	IC
	IC31	JCL0012	IC
	IC32	8VT15	IC
		or HMC-229	IC
	IC33	TA7347P	IC
	IC34	TA7347P	IC
	IC35	AN3916	IC
	IC36	TC74HC4538AP	IC
	IC37	AN607P	IC
	IC38	SN16913P	IC
	IC39	UPC319C	IC
	IC40	TC7W04F	IC
	IC41	AN608P	IC
	Q1	DTC144WK	TRANSISTOR
	Q2	2SC2412K(RS)	TRANSISTOR
	Q4	2SC2412K(RS)	TRANSISTOR
	Q5	2SA1037K(QR)	TRANSISTOR
	Q6	2SC2412K(RS)	TRANSISTOR
	Q7	2SK656	FE TRANSISTOR
	Q8	DTC144EK	TRANSISTOR
	Q9	2SC2412K(RS)	TRANSISTOR
	Q10	2SA1037K(QR)	TRANSISTOR
	Q11	2SC2412K(RS)	TRANSISTOR
	Q12	2SA1037K(QR)	TRANSISTOR
	Q13	2SC2412K(RS)	TRANSISTOR
	Q14	2SC2412K(RS)	TRANSISTOR
	Q15	2SA1037K(QR)	TRANSISTOR
	Q16	2SC2412K(RS)	TRANSISTOR
	Q17	2SK656	FE TRANSISTOR
	Q18	2SK656	FE TRANSISTOR
	Q19	2SA1037K(QR)	TRANSISTOR
	Q20	2SC2412K(RS)	TRANSISTOR
	Q21	2SC2412K(RS)	TRANSISTOR
	Q22	2SA1037K(QR)	TRANSISTOR
	Q23	2SK656	FE TRANSISTOR
	Q24	2SC2412K(RS)	TRANSISTOR
	Q25	2SC2412K(RS)	TRANSISTOR
	Q26	2SK656	FE TRANSISTOR
	Q27	2SK656	FE TRANSISTOR
	Q28	2SC2412K(RS)	TRANSISTOR
	Q29	2SA1037K(QR)	TRANSISTOR
	Q30	DTA144EK	TRANSISTOR
	Q31	2SC2412K(RS)	TRANSISTOR
	Q32	2SA1037K(QR)	TRANSISTOR
	Q33	2SA1037K(QR)	TRANSISTOR
	Q34	2SC2412K(RS)	TRANSISTOR
	Q35	2SA1037K(QR)	TRANSISTOR
	Q36	2SC2412K(RS)	TRANSISTOR
	Q37	2SA1037K(QR)	TRANSISTOR
	Q38	2SC2412K(RS)	TRANSISTOR
	Q39	2SA1037K(QR)	TRANSISTOR
	Q40	2SC2412K(RS)	TRANSISTOR
	Q44	2SA1037K(QR)	TRANSISTOR

#⚠	REF No.	PART No.	PART NAME, DESCRIPTION	
	Q45	2SA1037K(QR)	TRANSISTOR	
	Q46	DTC144EK	TRANSISTOR	
	Q47	2SC2412K(RS)	TRANSISTOR	
	Q48	2SC2412K(RS)	TRANSISTOR	
	Q49	2SA1037K(QR)	TRANSISTOR	
	Q50	2SC2412K(RS)	TRANSISTOR	
	Q51	2SK656	FE TRANSISTOR	
	Q52	2SC2412K(RS)	TRANSISTOR	
	Q53	2SC2412K(RS)	TRANSISTOR	
	Q55	2SK656	FE TRANSISTOR	
	Q56	2SC2412K(RS)	TRANSISTOR	
	D1	1SS133	DIODE	
	D2	1SS133	DIODE	
	D3	1SS93	DIODE	
	D4	1SS93	DIODE	
	D5	1SS93	DIODE	
	D6	1SS93	DIODE	
	D7	RD3.3EB2	ZENER DIODE	
	D8	1SS133	DIODE	
	D9	1SS133	DIODE	
	D10	1SS133	DIODE	
	D11	1SS133	DIODE	
	D12	1SS133	DIODE	
	D13	1SS133	DIODE	
	D14	1SS133	DIODE	
	D15	1SS133	DIODE	
	D16	1SS133	DIODE	
	D17	1SS133	DIODE	
	D18	1SS133	DIODE	
	R1	QVZ3513-102	V RESISTOR	1kΩ
	R2	QVZ3513-473	V RESISTOR	47kΩ
	R3	QVZ3513-102	V RESISTOR	1kΩ
	R4	QVZ3513-103	V RESISTOR	10kΩ
	R6	QVZ3513-222	V RESISTOR	2.2kΩ
	R101	QRSA08J-471YN	RESISTOR	470Ω,1/10W
	R102	QRSA08J-471YN	RESISTOR	470Ω,1/10W
	R103	QRSA08J-471YN	RESISTOR	470Ω,1/10W
	R104	QRSA08J-471YN	RESISTOR	470Ω,1/10W
	R105	QRSA08J-103YN	RESISTOR	10kΩ,1/10W
	R106	QRSA08J-103YN	RESISTOR	10kΩ,1/10W
	R107	QRSA08J-151YN	RESISTOR	150Ω,1/10W
	R108	QRSA08J-151YN	RESISTOR	150Ω,1/10W
	R109	QRSA08J-153YN	RESISTOR	15kΩ,1/10W
	R110	QRSA08J-223YN	RESISTOR	22kΩ,1/10W
	R111	QRSA08J-153YN	RESISTOR	15kΩ,1/10W
	R112	QRSA08J-183YN	RESISTOR	18kΩ,1/10W
	R113	NRVA62D-242N	RESISTOR	2.4kΩ,1/16W
	R114	QRSA08J-0R0Y	RESISTOR	0Ω,1/10W
	R115	QRSA08J-151YN	RESISTOR	150Ω,1/10W
	R116	QRSA08J-102YN	RESISTOR	1kΩ,1/10W
	R117	QRSA08J-333YN	RESISTOR	33kΩ,1/10W
	R118	QRSA08J-102YN	RESISTOR	1kΩ,1/10W
	R122	QRSA08J-103YN	RESISTOR	10kΩ,1/10W
	R123	QRSA08J-331YN	RESISTOR	330Ω,1/10W
	R124	QRSA08J-151YN	RESISTOR	150Ω,1/10W
	R125	QRSA08J-123YN	RESISTOR	12kΩ,1/10W
	R126	QRSA08J-822YN	RESISTOR	8.2kΩ,1/10W
	R127	QRSA08J-183YN	RESISTOR	18kΩ,1/10W
	R128	QRSA08J-223YN	RESISTOR	22kΩ,1/10W
	R129	QRSA08J-102YN	RESISTOR	1kΩ,1/10W
	R130	QRSA08J-222YN	RESISTOR	2.2kΩ,1/10W
	R131	QRSA08J-102YN	RESISTOR	1kΩ,1/10W
	R132	QRSA08J-103YN	RESISTOR	10kΩ,1/10W
	R133	QRSA08J-560YN	RESISTOR	56Ω,1/10W

<17>

#⚠REF No.	PART No.	PART NAME,	DESCRIPTION
R134	QRSA08J-680YN	RESISTOR	68Ω,1/10W
R135	QRSA08J-103YN	RESISTOR	10kΩ,1/10W
R136	QRSA08J-103YN	RESISTOR	10kΩ,1/10W
R137	QRSA08J-221YN	RESISTOR	220Ω,1/10W
R138	QRSA08J-223YN	RESISTOR	22kΩ,1/10W
R139	QRSA08J-273YN	RESISTOR	27kΩ,1/10W
R140	QRSA08J-272YN	RESISTOR	2.7kΩ,1/10W
R141	QRSA08J-222YN	RESISTOR	2.2kΩ,1/10W
R142	QRSA08J-560YN	RESISTOR	56Ω,1/10W
R143	QRSA08J-331YN	RESISTOR	330Ω,1/10W
R144	QRSA08J-152YN	RESISTOR	1.5kΩ,1/10W
R145	QRSA08J-272YN	RESISTOR	2.7kΩ,1/10W
R146	QRSA08J-562YN	RESISTOR	5.6kΩ,1/10W
R147	QRSA08J-393YN	RESISTOR	39kΩ,1/10W
R148	QRSA08J-153YN	RESISTOR	15kΩ,1/10W
R149	QRSA08J-393YN	RESISTOR	39kΩ,1/10W
R150	QRSA08J-153YN	RESISTOR	15kΩ,1/10W
R151	QRSA08J-392YN	RESISTOR	3.9kΩ,1/10W
R152	QRSA08J-392YN	RESISTOR	3.9kΩ,1/10W
R153	QRSA08J-471YN	RESISTOR	470Ω,1/10W
R154	NRVA62D-112N	RESISTOR	1.1kΩ,1/16W
R155	QRSA08J-562YN	RESISTOR	5.6kΩ,1/10W
R156	QRSA08J-103YN	RESISTOR	10kΩ,1/10W
R157	QRSA08J-333YN	RESISTOR	33kΩ,1/10W
R158	QRSA08J-102YN	RESISTOR	1kΩ,1/10W
R159	QRSA08J-222YN	RESISTOR	2.2kΩ,1/10W
R160	QRSA08J-182YN	RESISTOR	1.8kΩ,1/10W
R161	QRSA08J-561YN	RESISTOR	560Ω,1/10W
R162	QRSA08J-272YN	RESISTOR	2.7kΩ,1/10W
R163	QRSA08J-223YN	RESISTOR	22kΩ,1/10W
R164	QRSA08J-123YN	RESISTOR	12kΩ,1/10W
R165	QRSA08J-472YN	RESISTOR	4.7kΩ,1/10W
R166	QRSA08J-332YN	RESISTOR	3.3kΩ,1/10W
R167	QRSA08J-270YN	RESISTOR	27Ω,1/10W
R168	QRSA08J-181YN	RESISTOR	180Ω,1/10W
R169	NRVA62D-201N	RESISTOR	200Ω,1/16W
R170	QRSA08J-102YN	RESISTOR	1kΩ,1/10W
R171	QRSA08J-221YN	RESISTOR	220Ω,1/10W
R173	QRSA08J-103YN	RESISTOR	10kΩ,1/10W
R174	QRSA08J-332YN	RESISTOR	3.3kΩ,1/10W
R175	QRSA08J-682YN	RESISTOR	6.8kΩ,1/10W
R176	QRSA08J-102YN	RESISTOR	1kΩ,1/10W
R177	QRSA08J-102YN	RESISTOR	1kΩ,1/10W
R178	QRSA08J-101YN	RESISTOR	100Ω,1/10W
R179	QRSA08J-101YN	RESISTOR	100Ω,1/10W
R180	QRSA08J-104YN	RESISTOR	100kΩ,1/10W
R181	QRSA08J-103YN	RESISTOR	10kΩ,1/10W
R182	QRSA08J-103YN	RESISTOR	10kΩ,1/10W
R183	QRSA08J-561YN	RESISTOR	560Ω,1/10W
R184	QRSA08J-182YN	RESISTOR	1.8kΩ,1/10W
R185	QRSA08J-103YN	RESISTOR	10kΩ,1/10W
R186	QRSA08J-333YN	RESISTOR	33kΩ,1/10W
R187	QRSA08J-103YN	RESISTOR	10kΩ,1/10W
R188	QRSA08J-103YN	RESISTOR	10kΩ,1/10W
R189	QRSA08J-103YN	RESISTOR	10kΩ,1/10W
R190	QRSA08J-103YN	RESISTOR	10kΩ,1/10W
R191	QRSA08J-103YN	RESISTOR	10kΩ,1/10W
R192	QRSA08J-103YN	RESISTOR	10kΩ,1/10W
R193	QRSA08J-103YN	RESISTOR	10kΩ,1/10W
R194	QRSA08J-103YN	RESISTOR	10kΩ,1/10W
R195	QRSA08J-103YN	RESISTOR	10kΩ,1/10W
R196	QRSA08J-103YN	RESISTOR	10kΩ,1/10W
R199	QRD161J-181	RESISTOR	180Ω,1/6W
R200	QRSA08J-103YN	RESISTOR	10kΩ,1/10W
R201	QRSA08J-333YN	RESISTOR	33kΩ,1/10W
R202	QRSA08J-102YN	RESISTOR	1kΩ,1/10W
R203	QRSA08J-681YN	RESISTOR	680Ω,1/10W
R204	QRSA08J-222YN	RESISTOR	2.2kΩ,1/10W
R208	QRSA08J-101YN	RESISTOR	100Ω,1/10W
R209	QRSA08J-221YN	RESISTOR	220Ω,1/10W
R210	QRSA08J-221YN	RESISTOR	220Ω,1/10W
R211	QRSA08J-103YN	RESISTOR	10kΩ,1/10W
R212	QRSA08J-223YN	RESISTOR	22kΩ,1/10W
R213	QRSA08J-103YN	RESISTOR	10kΩ,1/10W
R214	QRSA08J-750YN	RESISTOR	75Ω,1/10W
R215	QRSA08J-152YN	RESISTOR	1.5kΩ,1/10W
R216	QRSA08J-183YN	RESISTOR	18kΩ,1/10W
R217	QRSA08J-124YN	RESISTOR	120kΩ,1/10W
R218	QRSA08J-223YN	RESISTOR	22kΩ,1/10W
R219	QRSA08J-273YN	RESISTOR	27kΩ,1/10W
R220	QRSA08J-472YN	RESISTOR	4.7kΩ,1/10W
R221	QRSA08J-332YN	RESISTOR	3.3kΩ,1/10W
R222	QRSA08J-270YN	RESISTOR	27Ω,1/10W
R223	QRSA08J-181YN	RESISTOR	180Ω,1/10W
R224	NRVA62D-201N	RESISTOR	200Ω,1/16W
R225	QRSA08J-562YN	RESISTOR	5.6kΩ,1/10W
R226	QRSA08J-393YN	RESISTOR	39kΩ,1/10W
R227	QRSA08J-153YN	RESISTOR	15kΩ,1/10W
R228	QRSA08J-393YN	RESISTOR	39kΩ,1/10W
R229	QRSA08J-153YN	RESISTOR	15kΩ,1/10W
R230	QRSA08J-392YN	RESISTOR	3.9kΩ,1/10W
R232	QRSA08J-271YN	RESISTOR	270Ω,1/10W
R233	NRVA62D-112N	RESISTOR	1.1kΩ,1/16W
R234	QRSA08J-562YN	RESISTOR	5.6kΩ,1/10W
R235	QRSA08J-272YN	RESISTOR	2.7kΩ,1/10W
R236	QRSA08J-561YN	RESISTOR	560Ω,1/10W
R237	QRSA08J-272YN	RESISTOR	2.7kΩ,1/10W
R238	QRSA08J-223YN	RESISTOR	22kΩ,1/10W
R239	QRSA08J-273YN	RESISTOR	27kΩ,1/10W
R240	QRSA08J-472YN	RESISTOR	4.7kΩ,1/10W
R241	QRSA08J-332YN	RESISTOR	3.3kΩ,1/10W
R242	QRSA08J-270YN	RESISTOR	27Ω,1/10W
R243	QRSA08J-181YN	RESISTOR	180Ω,1/10W
R244	NRVA62D-201N	RESISTOR	200Ω,1/16W
R249	QRSA08J-392YN	RESISTOR	3.9kΩ,1/10W
R250	QRSA08J-152YN	RESISTOR	1.5kΩ,1/10W
R251	QRSA08J-104YN	RESISTOR	100kΩ,1/10W
R252	QRSA08J-104YN	RESISTOR	100kΩ,1/10W
R253	QRSA08J-272YN	RESISTOR	2.7kΩ,1/10W
R254	QRSA08J-222YN	RESISTOR	2.2kΩ,1/10W
R255	QRSA08J-272YN	RESISTOR	2.7kΩ,1/10W
R256	QRSA08J-272YN	RESISTOR	2.7kΩ,1/10W
R257	QRSA08J-103YN	RESISTOR	10kΩ,1/10W
R258	QRSA08J-151YN	RESISTOR	150Ω,1/10W
R259	QRSA08J-151YN	RESISTOR	150Ω,1/10W
R260	QRSA08J-103YN	RESISTOR	10kΩ,1/10W
R261	QRSA08J-223YN	RESISTOR	22kΩ,1/10W
R262	QRSA08J-273YN	RESISTOR	27kΩ,1/10W
R265	QRSA08J-392YN	RESISTOR	3.9kΩ,1/10W
R266	QRSA08J-472YN	RESISTOR	4.7kΩ,1/10W
R267	QRSA08J-103YN	RESISTOR	10kΩ,1/10W
R268	QRSA08J-103YN	RESISTOR	10kΩ,1/10W
R269	QRSA08J-152YN	RESISTOR	1.5kΩ,1/10W
R270	QRSA08J-102YN	RESISTOR	1kΩ,1/10W
R271	QRSA08J-102YN	RESISTOR	1kΩ,1/10W
R272	QRSA08J-333YN	RESISTOR	33kΩ,1/10W
R273	QRSA08J-183YN	RESISTOR	18kΩ,1/10W
R274	QRSA08J-222YN	RESISTOR	2.2kΩ,1/10W
R275	QRSA08J-122YN	RESISTOR	1.2kΩ,1/10W
R276	QRSA08J-332YN	RESISTOR	3.3kΩ,1/10W
R277	QRSA08J-181YN	RESISTOR	180Ω,1/10W
R278	QRSA08J-152YN	RESISTOR	1.5kΩ,1/10W
R279	QRSA08J-561YN	RESISTOR	560Ω,1/10W
R280	QRSA08J-561YN	RESISTOR	560Ω,1/10W

#⚠REF No.	PART No.	PART NAME, DESCRIPTION	
R281	QRSA08J-392YN	RESISTOR	3.9kΩ,1/10W
R282	QRSA08J-152YN	RESISTOR	1.5kΩ,1/10W
R283	QRSA08J-103YN	RESISTOR	10kΩ,1/10W
R284	QRSA08J-223YN	RESISTOR	22kΩ,1/10W
R285	QRSA08J-152YN	RESISTOR	1.5kΩ,1/10W
R286	QRSA08J-222YN	RESISTOR	2.2kΩ,1/10W
R287	QRSA08J-102YN	RESISTOR	1kΩ,1/10W
R288	QRSA08J-333YN	RESISTOR	33kΩ,1/10W
R289	QRSA08J-153YN	RESISTOR	15kΩ,1/10W
R290	QRSA08J-152YN	RESISTOR	1.5kΩ,1/10W
R291	QRSA08J-152YN	RESISTOR	1.5kΩ,1/10W
R292	QRSA08J-102YN	RESISTOR	1kΩ,1/10W
R293	QRSA08J-101YN	RESISTOR	100Ω,1/10W
R294	QRSA08J-103YN	RESISTOR	10kΩ,1/10W
R295	QRSA08J-332YN	RESISTOR	3.3kΩ,1/10W
R296	QRSA08J-102YN	RESISTOR	1kΩ,1/10W
R297	QRSA08J-152YN	RESISTOR	1.5kΩ,1/10W
R298	QRD161J-471	RESISTOR	470Ω,1/6W
R299	QRD161J-103	RESISTOR	10kΩ,1/6W
R300	QRD161J-471	RESISTOR	470Ω,1/6W
C1	QCFA1HZ-104	CAPACITOR	0.1μF,50V
C2	QCFA1HZ-104	CAPACITOR	0.1μF,50V
C3	QETC1CM-476	E CAPACITOR	47μF,16V
C4	QETC1CM-337	E CAPACITOR	330μF,16V
C5	QETC1AM-476	E CAPACITOR	47μF,10V
C6	QETC1AM-476	E CAPACITOR	47μF,10V
C7	QCFA1HZ-103	CAPACITOR	0.01μF,50V
C8	QETC1AM-476	E CAPACITOR	47μF,10V
C9	QETC1AM-476	E CAPACITOR	47μF,10V
C10	QCSA1HJ-271	CAPACITOR	270pF,50V
C11	QETC1CM-227	E CAPACITOR	220μF,16V
C12	QCFA1HZ-103	CAPACITOR	0.01μF,50V
C13	QCFA1HZ-104	CAPACITOR	0.1μF,50V
C14	QCFA1HZ-104	CAPACITOR	0.1μF,50V
C15	QETC1AM-476	E CAPACITOR	47μF,10V
C16	QCYA1HK-332	CAPACITOR	0.0033μF,50V
C17	QCYA1EK-473	CAPACITOR	0.047μF,25V
C18	QETC1EM-475	E CAPACITOR	4.7μF,25V
C19	QETC1EM-475	E CAPACITOR	4.7μF,25V
C20	QCYA1EK-103	CAPACITOR	0.01μF,25V
C21	QETC1AM-227	E CAPACITOR	220μF,10V
C22	QETC1CM-227	E CAPACITOR	220μF,16V
C23	QCFA1HZ-103	CAPACITOR	0.01μF,50V
C24	QETC1AM-476	E CAPACITOR	47μF,10V
C25	QETC1AM-476	E CAPACITOR	47μF,10V
C26	QETC1AM-107	E CAPACITOR	100μF,10V
C27	QCFA1HZ-103	CAPACITOR	0.01μF,50V
C28	QCFA1HZ-103	CAPACITOR	0.01μF,50V
C29	QCYA1EK-223	CAPACITOR	0.022μF,25V
C30	QETC1CM-476	E CAPACITOR	47μF,16V
C31	QCYA1HJ-333	CAPACITOR	0.033μF,50V
C32	QETC0JM-476	E CAPACITOR	47μF,6.3V
C33	QETC1HM-225	E CAPACITOR	2.2μF,50V
C34	QCFA1HZ-104	CAPACITOR	0.1μF,50V
C35	QCFA1HZ-104	CAPACITOR	0.1μF,50V
C36	QETC1CM-476	E CAPACITOR	47μF,16V
C37	QETC1AM-107	E CAPACITOR	100μF,10V
C38	QETC0JM-227	E CAPACITOR	220μF,6.3V
C39	QCSA1HJ-390	CAPACITOR	39pF,50V
C40	QETC1AM-107	E CAPACITOR	100μF,10V
C41	QETC1AM-476	E CAPACITOR	47μF,10V
C43	QCFA1HZ-103	CAPACITOR	0.01μF,50V
C44	QCFA1HZ-104	CAPACITOR	0.1μF,50V
C45	QCFA1HZ-104	CAPACITOR	0.1μF,50V
C46	QETC1AM-476	E CAPACITOR	47μF,10V
C47	QETC1AM-226	E CAPACITOR	22μF,10V
C48	QCSA1HJ-390	CAPACITOR	39pF,50V
C49	QCSA1HJ-121	CAPACITOR	120pF,50V
C50	QENC1HM-105	NP E CAPACITOR	1μF,50V
C51	QCFA1HZ-103	CAPACITOR	0.01μF,50V
C52	QCFA1HZ-104	CAPACITOR	0.1μF,50V
C53	QCFA1HZ-104	CAPACITOR	0.1μF,50V
C54	QETC1CM-476	E CAPACITOR	47μF,16V
C55	QCYA1EK-223	CAPACITOR	0.022μF,25V
C56	QETC0JM-227	E CAPACITOR	220μF,6.3V
C58	QCFA1HZ-104	CAPACITOR	0.1μF,50V
C59	QCFA1HZ-104	CAPACITOR	0.1μF,50V
C60	QETC1AM-476	E CAPACITOR	47μF,10V
C61	QCFA1HZ-104	CAPACITOR	0.1μF,50V
C62	QCFA1HZ-104	CAPACITOR	0.1μF,50V
C63	QENC1HM-105	NP E CAPACITOR	1μF,50V
C64	QETC1AM-226	E CAPACITOR	22μF,10V
C65	QCFA1HZ-104	CAPACITOR	0.1μF,50V
C66	QCFA1HZ-104	CAPACITOR	0.1μF,50V
C67	QETC1CM-476	E CAPACITOR	47μF,16V
C69	QCYA1EK-223	CAPACITOR	0.022μF,25V
C70	QCTA1CH-100	CAPACITOR	10pF,16V
C71	QCTA1CH-330	CAPACITOR	33pF,16V
C72	QCYA1EK-223	CAPACITOR	0.022μF,25V
C73	QETC1AM-476	E CAPACITOR	47μF,10V
C75	QCFA1HZ-103	CAPACITOR	0.01μF,50V
C76	QCFA1HZ-104	CAPACITOR	0.1μF,50V
C77	QCFA1HZ-104	CAPACITOR	0.1μF,50V
C78	QETC1AM-476	E CAPACITOR	47μF,10V
C79	QCFA1HZ-104	CAPACITOR	0.1μF,50V
C80	QCFA1HZ-104	CAPACITOR	0.1μF,50V
C81	QETC1AM-476	E CAPACITOR	47μF,10V
C82	QCFA1HZ-103	CAPACITOR	0.01μF,50V
C83	QETC1HM-105	E CAPACITOR	1μF,50V
C84	QCFA1HZ-104	CAPACITOR	0.1μF,50V
C85	QCFA1HZ-104	CAPACITOR	0.1μF,50V
C86	QETC1AM-476	E CAPACITOR	47μF,10V
C87	QCFA1HZ-104	CAPACITOR	0.1μF,50V
C88	QCFA1HZ-104	CAPACITOR	0.1μF,50V
C89	QETC1AM-476	E CAPACITOR	47μF,10V
C90	QETC1EM-475	E CAPACITOR	4.7μF,25V
C91	QCFA1HZ-104	CAPACITOR	0.1μF,50V
C92	QCFA1HZ-104	CAPACITOR	0.1μF,50V
C93	QETC1AM-476	E CAPACITOR	47μF,10V
C94	QCYA1EK-103	CAPACITOR	0.01μF,25V
C95	QCYA1EK-103	CAPACITOR	0.01μF,25V
C96	QCYA1EK-103	CAPACITOR	0.01μF,25V
C97	QCSA1HK-101	CAPACITOR	100pF,50V
C98	QCFA1HZ-104	CAPACITOR	0.1μF,50V
C99	QCFA1HZ-104	CAPACITOR	0.1μF,50V
C100	QETC1AM-476	E CAPACITOR	47μF,10V
C101	QCFA1HZ-104	CAPACITOR	0.1μF,50V
C102	QCFA1HZ-104	CAPACITOR	0.1μF,50V
C103	QETC1AM-476	E CAPACITOR	47μF,10V
C104	QETC1CM-107	E CAPACITOR	100μF,16V
C105	QETC1CM-476	E CAPACITOR	47μF,16V
C106	QCYA1EK-223	CAPACITOR	0.022μF,25V
C107	QETC0JM-227	E CAPACITOR	220μF,6.3V
C109	QETC1AM-476	E CAPACITOR	47μF,10V
C110	QETC1CM-476	E CAPACITOR	47μF,16V
C112	QCFA1HZ-103	CAPACITOR	0.01μF,50V
C113	QCYA1EK-223	CAPACITOR	0.022μF,25V
C114	QETC1CM-476	E CAPACITOR	47μF,16V
C115	QCSA1HJ-680	CAPACITOR	68pF,50V
C116	QCSA1HJ-681	CAPACITOR	680pF,50V
C118	QETC1AM-107	E CAPACITOR	100μF,10V
C119	QETC0JM-227	E CAPACITOR	220μF,6.3V

<17><39>

#△	REF No.	PART No.	PART NAME, DESCRIPTION	
	C121	QETC1CM-476	E CAPACITOR	47µF,16V
	C122	QCYA1EK-223	CAPACITOR	0.022µF,25V
	C123	QENC1AM-226	E CAPACITOR	22µF,10V
	C124	QETC1CM-106	E CAPACITOR	10µF,16V
	C125	QETC1AM-476	E CAPACITOR	47µF,10V
	C126	QETC1AM-476	E CAPACITOR	47µF,10V
	C127	QCFA1HZ-103	CAPACITOR	0.01µF,50V
	C128	QCYA1EK-103	CAPACITOR	0.01µF,25V
	C129	QETC1AM-476	E CAPACITOR	47µF,10V
	C130	QCFA1HZ-103	CAPACITOR	0.01µF,50V
	C131	QCFA1HZ-104	CAPACITOR	0.1µF,50V
	C132	QCFA1HZ-104	CAPACITOR	0.1µF,50V
	C133	QETC1AM-476	E CAPACITOR	47µF,10V
	C134	QCYA1HK-332	CAPACITOR	0.0033µF,50V
	C135	QCFA1EZ-473	CAPACITOR	0.047µF,25V
	C136	QETC1EM-475	E CAPACITOR	4.7µF,25V
	C137	QETC1EM-475	E CAPACITOR	4.7µF,25V
	C138	QCFA1HZ-103	CAPACITOR	0.01µF,50V
	C139	QCFA1HZ-103	CAPACITOR	0.01µF,50V
	C140	QCYA1HK-102	CAPACITOR	0.001µF,50V
	C141	QCYA1HK-102	CAPACITOR	0.001µF,50V
	C142	QETC1CM-106	E CAPACITOR	10µF,16V
	C143	QCYA1EK-223	CAPACITOR	0.022µF,25V
	C144	QCYA1EK-103	CAPACITOR	0.01µF,25V
	C145	QCYA1EK-103	CAPACITOR	0.01µF,25V
	C146	QCYA1EK-103	CAPACITOR	0.01µF,25V
	C147	QCYA1EK-103	CAPACITOR	0.01µF,25V
	C148	QCYA1EK-103	CAPACITOR	0.01µF,25V
	C149	QCYA1EK-103	CAPACITOR	0.01µF,25V
	C150	QCYA1EK-103	CAPACITOR	0.01µF,25V
	C151	QCYA1EK-103	CAPACITOR	0.01µF,25V
	C152	QCYA1EK-103	CAPACITOR	0.01µF,25V
	C153	QCSA1HK-101	CAPACITOR	100pF,50V
	C154	QCFA1HZ-104	CAPACITOR	0.1µF,50V
	C155	QETC1AM-476	E CAPACITOR	47µF,10V
	C156	QETC1AM-476	E CAPACITOR	47µF,10V
	C157	QETC1CM-227	E CAPACITOR	220µF,16V
	C158	QETC1CM-227	E CAPACITOR	220µF,16V
	C159	QETC1EM-475	E CAPACITOR	4.7µF,25V
	C160	QCSA1HJ-560	CAPACITOR	56pF,50V
	C161	QENC1CM-476	NP E CAPACITOR	47µF,16V
	C162	QCFA1HZ-103	CAPACITOR	0.01µF,50V
	C163	QCSA1HJ-121	CAPACITOR	120pF,50V
	C164	QETA1CM-476	E CAPACITOR	47µF,16V
	C165	QCT05CH-271	CAPACITOR	270pF
	C166	QFN41HK-223	M CAPACITOR	0.022µF,50V
	C167	QCS11HJ-101	CAPACITOR	100pF,50V
	C168	QCF11HP-102	CAPACITOR	0.001µF,50V
	C169	QCS11HJ-101	CAPACITOR	100pF,50V
	L1	PU48530-221J	COIL	220µH
	L3	PU48530-150J	COIL	15µH
	L5	PU48530-820J	COIL	82µH
	L8	PU48530-100J	COIL	10µH
	L9	PU48530-100J	COIL	10µH
	L10	PU48530-471J	COIL	470µH
	L11	PU48530-100J	COIL	10µH
	LPF1	PGZ01321	LOW PASS FILTER	
	LPF2	PELN0320	LOW PASS FILTER	
	LPF4	PELN0321	LOW PASS FILTER	
	LPF5	PGZ01321	LOW PASS FILTER	
	LPF6	PELN0321	LOW PASS FILTER	
	LPF7	PGZ01321	LOW PASS FILTER	
	LPF8	PELN0321	LOW PASS FILTER	

#△	REF No.	PART No.	PART NAME, DESCRIPTION	
	BPF1	PELN0396	BAND PASS FILTER	
	DL1	PGZ01558	DELAY LINE	
	SW1	QSS1K81-L01	DIP SW	
	SW2	PU54440	SWITCH	
△	K1	PGZ01222-001	FERRATE BEADS	
△	K2	PGZ01222-001	FERRATE BEADS	
△	K3	PGZ01222-001	FERRATE BEADS	
△	K4	PGZ01222-001	FERRATE BEADS	
△	K5	PGZ01222-001	FERRATE BEADS	
△	K6	PGZ01222-001	FERRATE BEADS	
△	K7	PGZ01222-001	FERRATE BEADS	
△	K8	PGZ01222-001	FERRATE BEADS	
△	K9	PGZ01222-001	FERRATE BEADS	
△	K10	PGZ01222-001	FERRATE BEADS	
△	K11	PGZ01222-001	FERRATE BEADS	
△	K12	PGZ01222-001	FERRATE BEADS	
△	K13	PGZ01222-001	FERRATE BEADS	
△	K14	PGZ01222-001	FERRATE BEADS	
△	K15	PGZ01222-001	FERRATE BEADS	
△	K16	PGZ01222-001	FERRATE BEADS	
△	K17	PGZ01222-001	FERRATE BEADS	
	TH1	ERT-D2FGL301S	THERMISTOR	
	EJ1	PGZ00582	EJECTOR, ×2	
	RV1	PU53276	PLASTIC RIVET, ×4	
	SLD1	PRD30781-02-03	SHIELD PLATE	
	SLD2	PGZ00660-05	M/BUS, ×2	
	SLD3	PGZ00660-10	M/BUS, ×2	
	TP1	PU54983	TEST PIN, ×7	
	CN1	PGZ00421-64	MALE CONNECTOR	

- 4FSC BOARD ASSEMBLY <39> -

#△	REF No.	PART No.	PART NAME, DESCRIPTION	
	PWBA	PRK30102B	4FSC BOARD ASSY	
	IC1	NJM2240D	IC	
	IC2	TC7S04F	IC	
	Q1	2SC2412K(QR)	TRANSISTOR	
	R1	NVP1415-202N	V RESISTOR	2kΩ,1/4W
	R10	QRSA08J-223YN	RESISTOR	22kΩ,1/10W
	R11	QRSA08J-333YN	RESISTOR	33kΩ,1/10W
	R12	QRSA08J-102YN	RESISTOR	1kΩ,1/10W
	R13	QRSA08J-361YN	RESISTOR	360Ω,1/10W
	R14	QRSA08J-222YN	RESISTOR	2.2kΩ,1/10W
	R15	QRSA08J-105YN	RESISTOR	1MΩ,1/10W

#⚠REF No.	PART No.	PART NAME, DESCRIPTION	
C10	QCFA1HZ-103	CAPACITOR	0.01 μF,50V
C11	QCFA1HZ-103	CAPACITOR	0.01 μF,50V
C12	QEF81AM-475	TANTAL CAPACITOR	4.7 μF,10V
C13	QCFA1HZ-103	CAPACITOR	0.01 μF,50V
C14	QCTA1CH-5R0	CAPACITOR	5pF,16V
C15	QCFA1HZ-103	CAPACITOR	0.01 μF,50V
C16	NEH10JM-107NP	E CAPACITOR	100 μF,6.3V
C17	QCFA1HZ-103	CAPACITOR	0.01 μF,50V
C18	QCFA1HZ-103	CAPACITOR	0.01 μF,50V
PJ1	PGZ00835-01	CONNECTOR, ×4	
TP1	PGZ01015	TEST PIN	
CN1	PGZ01091-01	CONNECTOR, ×4	

OUTPUT BOARD ASSEMBLY<19>

#⚠REF No.	PART No.	PART NAME, DESCRIPTION
PWBA	PRK20124B-01	OUTPUT BOARD ASSY
STK1	PRD30072-54	STICKER
IC1	M5278L12	IC
IC2	M5278L12	IC
IC3	M5278L12	IC
IC4	M5278L12	IC
IC5	M5278L12	IC
IC6	M5278L05	IC
IC11	8VT15	IC
IC12	SN16913P	IC
IC13	TA7348P	IC
IC14	8VT15	IC
IC15	BA4558F	IC
IC16	TC4066BF	IC
IC17	UPC4082G2	IC
IC18	UPC311C	IC
IC19	TC4538BF	IC
IC20	8VT15	IC
IC21	TC74HC4538AF	IC
IC22	LVA523SA	IC
IC23	TA7347P	IC
IC24	LM6361N	IC
IC25	TA7347P	IC
IC26	TA7347P	IC
IC27	LM6361N	IC
IC28	LM6361N	IC
IC29	VC2520	IC
IC31	AN607P	IC
IC32	TC4011BF	IC
IC33	M5278L12	IC
IC34	M5278L12	IC
Q1	2SC2412K(RS)	TRANSISTOR
Q2	2SA1037K(QR)	TRANSISTOR
Q3	2SA1037K(QR)	TRANSISTOR
Q4	2SC2412K(RS)	TRANSISTOR
Q5	DTA144EK	TRANSISTOR
Q6	2SC2412K(RS)	TRANSISTOR
Q7	2SC2412K(RS)	TRANSISTOR
Q9	2SC2412K(RS)	TRANSISTOR
Q10	2SA1037K(QR)	TRANSISTOR
Q12	2SD1383K(B)	TRANSISTOR
Q13	2SD1383K(B)	TRANSISTOR
Q14	2SA1037K(QR)	TRANSISTOR
Q15	2SA1037K(QR)	TRANSISTOR
Q16	2SA1037K(QR)	TRANSISTOR
Q17	DTC144EK	TRANSISTOR
Q18	DTA144EK	TRANSISTOR
Q19	2SK621	FE TRANSISTOR
Q20	2SA1037K(QR)	TRANSISTOR
Q21	2SC2412K(RS)	TRANSISTOR
Q22	DTA144EK	TRANSISTOR
Q23	DTC144EK	TRANSISTOR
Q24	2SA1037K(QR)	TRANSISTOR
Q25	2SC2412K(RS)	TRANSISTOR
Q26	DTC144EK	TRANSISTOR
Q27	DTC144EK	TRANSISTOR
Q28	DTC144EK	TRANSISTOR
Q29	DTC144EK	TRANSISTOR
Q30	DTC144EK	TRANSISTOR
Q31	DTC144EK	TRANSISTOR
Q32	2SC2412K(RS)	TRANSISTOR
Q33	2SA1037K(QR)	TRANSISTOR
Q34	2SA1037K(QR)	TRANSISTOR
Q35	DTA144EK	TRANSISTOR
Q36	2SK208	FE TRANSISTOR
Q37	2SC2412K(RS)	TRANSISTOR
Q38	2SC2412K(RS)	TRANSISTOR
Q39	2SC2412K(RS)	TRANSISTOR
Q40	2SA1037K(QR)	TRANSISTOR
Q41	2SC2412K(RS)	TRANSISTOR
Q42	2SC2412K(RS)	TRANSISTOR
Q43	2SC2412K(RS)	TRANSISTOR
Q44	2SD601(Q)	TRANSISTOR
Q45	DTC144EK	TRANSISTOR
Q46	2SD601(Q)	TRANSISTOR
Q47	2SA1037K(QR)	TRANSISTOR
Q48	2SC2412K(RS)	TRANSISTOR
Q49	2SD601A(QR)	TRANSISTOR
Q50	2SA1037K(QR)	TRANSISTOR
Q51	2SC2412K(RS)	TRANSISTOR
Q52	2SA1037K(QR)	TRANSISTOR
Q53	2SC2412K(RS)	TRANSISTOR
Q55	2SC2412K(RS)	TRANSISTOR
Q56	2SC2412K(RS)	TRANSISTOR
Q61	DTC144EK	TRANSISTOR
Q62	2SC2412K(RS)	TRANSISTOR
Q63	2SK621	FE TRANSISTOR
Q64	2SK621	FE TRANSISTOR
Q65	2SD601(R)	TRANSISTOR
Q66	2SD601(R)	TRANSISTOR
Q67	2SK621	FE TRANSISTOR
D1	1SS133	DIODE
D2	MA27TB	DIODE
D5	GL-3PR8	LE DIODE
D6	1SS133	DIODE
D7	1SS133	DIODE
D8	RD7.5ES-T1B1	ZENER DIODE
D9	1SS133	DIODE
D10	1SS133	DIODE
D11	1SS133	DIODE
D12	1SS133	DIODE
D13	1SS133	DIODE

#⚠REF No.	PART No.	PART NAME,	DESCRIPTION
D14	1SS133	DIODE	
D15	1SS99	DIODE	
D16	1SS99	DIODE	
D21	1SS133	DIODE	
D22	1SS133	DIODE	
D23	1SS133	DIODE	
D24	1SS133	DIODE	
D25	1SS133	DIODE	
R2	QVPB610-102	V RESISTOR	1kΩ
R4	QVZ3513-104	V RESISTOR	100kΩ
R5	QVZ3513-104	V RESISTOR	100kΩ
R7	QVPB610-502	V RESISTOR	5kΩ
R8	QVZ3514-332	V RESISTOR	3.3kΩ
R101	QRD161J-223	RESISTOR	22kΩ,1/6W
R102	QRD161J-333	RESISTOR	33kΩ,1/6W
R103	QRD161J-471	RESISTOR	470Ω,1/6W
R104	QRD161J-391	RESISTOR	390Ω,1/6W
R105	QRD161J-391	RESISTOR	390Ω,1/6W
R106	QRD161J-391	RESISTOR	390Ω,1/6W
R107	QRD161J-332	RESISTOR	3.3kΩ,1/6W
R108	QRD161J-332	RESISTOR	3.3kΩ,1/6W
R109	QRD161J-562	RESISTOR	5.6kΩ,1/6W
R110	QRD161J-103	RESISTOR	10kΩ,1/6W
R111	QRD161J-222	RESISTOR	2.2kΩ,1/6W
R112	QRD161J-102	RESISTOR	1kΩ,1/6W
R113	QRD161J-222	RESISTOR	2.2kΩ,1/6W
R114	QRD161J-123	RESISTOR	12kΩ,1/6W
R115	QRD161J-222	RESISTOR	2.2kΩ,1/6W
R116	QRD161J-472	RESISTOR	4.7kΩ,1/6W
R117	QRD161J-222	RESISTOR	2.2kΩ,1/6W
R118	QRD161J-222	RESISTOR	2.2kΩ,1/6W
R119	QRD161J-681	RESISTOR	680Ω,1/6W
R123	QRD161J-222	RESISTOR	2.2kΩ,1/6W
R124	QRD161J-102	RESISTOR	1kΩ,1/6W
R125	QRD161J-101	RESISTOR	100Ω,1/6W
R126	QRD161J-561	RESISTOR	560Ω,1/6W
R127	QRD161J-472	RESISTOR	4.7kΩ,1/6W
R128	QRD161J-102	RESISTOR	1kΩ,1/6W
R129	QRD161J-181	RESISTOR	180Ω,1/6W
R130	QRD161J-821	RESISTOR	820Ω,1/6W
R131	QRD161J-102	RESISTOR	1kΩ,1/6W
R132	QRD161J-562	RESISTOR	5.6kΩ,1/6W
R133	QRD161J-562	RESISTOR	5.6kΩ,1/6W
R134	QRD161J-333	RESISTOR	33kΩ,1/6W
R135	QRD161J-103	RESISTOR	10kΩ,1/6W
R136	QRD161J-333	RESISTOR	33kΩ,1/6W
R137	QRD161J-103	RESISTOR	10kΩ,1/6W
R138	QRD161J-222	RESISTOR	2.2kΩ,1/6W
R139	QRD161J-222	RESISTOR	2.2kΩ,1/6W
R140	QRD161J-562	RESISTOR	5.6kΩ,1/6W
R141	QRD161J-101	RESISTOR	100Ω,1/6W
R142	QRD161J-472	RESISTOR	4.7kΩ,1/6W
R143	QRD161J-472	RESISTOR	4.7kΩ,1/6W
R144	QRD161J-102	RESISTOR	1kΩ,1/6W
R145	QRD161J-102	RESISTOR	1kΩ,1/6W
R146	QRD161J-222	RESISTOR	2.2kΩ,1/6W
R147	QRD161J-123	RESISTOR	12kΩ,1/6W
R148	QRD161J-561	RESISTOR	560Ω,1/6W
R149	QRD161J-682	RESISTOR	6.8kΩ,1/6W
R150	QRD161J-562	RESISTOR	5.6kΩ,1/6W
R151	QRD161J-102	RESISTOR	1kΩ,1/6W
R152	QRD161J-102	RESISTOR	1kΩ,1/6W
R153	QRD161J-222	RESISTOR	2.2kΩ,1/6W
R154	QRD161J-102	RESISTOR	1kΩ,1/6W
R155	QRD161J-0R0	RESISTOR	0Ω,1/6W

#⚠REF No.	PART No.	PART NAME,	DESCRIPTION
R156	QRD161J-0R0	RESISTOR	0Ω,1/6W
R157	QRD161J-562	RESISTOR	5.6kΩ,1/6W
R158	QRD161J-103	RESISTOR	10kΩ,1/6W
R159	QRD161J-474	RESISTOR	470kΩ,1/6W
R160	QRD161J-222	RESISTOR	2.2kΩ,1/6W
R161	QRD161J-103	RESISTOR	10kΩ,1/6W
R162	QRD161J-472	RESISTOR	4.7kΩ,1/6W
R163	QRD161J-681	RESISTOR	680Ω,1/6W
R164	QRD161J-123	RESISTOR	12kΩ,1/6W
R165	QRD161J-472	RESISTOR	4.7kΩ,1/6W
R166	QRD161J-103	RESISTOR	10kΩ,1/6W
R167	QRD161J-103	RESISTOR	10kΩ,1/6W
R168	QRD161J-472	RESISTOR	4.7kΩ,1/6W
R169	QRD161J-472	RESISTOR	4.7kΩ,1/6W
R170	QRD161J-103	RESISTOR	10kΩ,1/6W
R171	QRD161J-102	RESISTOR	1kΩ,1/6W
R172	QRD161J-472	RESISTOR	4.7kΩ,1/6W
R173	QRD161J-472	RESISTOR	4.7kΩ,1/6W
R174	QRD161J-103	RESISTOR	10kΩ,1/6W
R175	QRD161J-472	RESISTOR	4.7kΩ,1/6W
R176	QRD161J-103	RESISTOR	10kΩ,1/6W
R177	QRD161J-123	RESISTOR	12kΩ,1/6W
R178	QRD161J-473	RESISTOR	47kΩ,1/6W
R179	QRD161J-473	RESISTOR	47kΩ,1/6W
R180	QRD161J-332	RESISTOR	3.3kΩ,1/6W
R181	QRD161J-333	RESISTOR	33kΩ,1/6W
R182	QRD161J-393	RESISTOR	39kΩ,1/6W
R183	QRV141F-3600AY	CMF RESISTOR	360Ω,1/4W
R184	QRD161J-391	RESISTOR	390Ω,1/6W
R185	QRD161J-102	RESISTOR	1kΩ,1/6W
R187	QRD161J-222	RESISTOR	2.2kΩ,1/6W
R188	QRD161J-222	RESISTOR	2.2kΩ,1/6W
R189	QRD161J-562	RESISTOR	5.6kΩ,1/6W
R190	QRD161J-471	RESISTOR	470Ω,1/6W
R191	QRD161J-105	RESISTOR	1MΩ,1/6W
R192	QRD161J-821	RESISTOR	820Ω,1/6W
R193	QRD161J-222	RESISTOR	2.2kΩ,1/6W
R194	QRD161J-122	RESISTOR	1.2kΩ,1/6W
R195	QRD161J-222	RESISTOR	2.2kΩ,1/6W
R196	QRD161J-181	RESISTOR	180Ω,1/6W
R197	QRD161J-182	RESISTOR	1.8kΩ,1/6W
R198	QRD161J-471	RESISTOR	470Ω,1/6W
R199	QRD161J-391	RESISTOR	390Ω,1/6W
R200	QRD161J-391	RESISTOR	390Ω,1/6W
R201	QRD161J-563	RESISTOR	56kΩ,1/6W
R202	QRD161J-103	RESISTOR	10kΩ,1/6W
R203	QRD161J-122	RESISTOR	1.2kΩ,1/6W
R204	QRD161J-271	RESISTOR	270Ω,1/6W
R205	QRD161J-471	RESISTOR	470Ω,1/6W
R206	QRD161J-391	RESISTOR	390Ω,1/6W
R207	QRD161J-391	RESISTOR	390Ω,1/6W
R210	QRD161J-471	RESISTOR	470Ω,1/6W
R211	QRD161J-271	RESISTOR	270Ω,1/6W
R212	QRD161J-222	RESISTOR	2.2kΩ,1/6W
R213	QRD161J-103	RESISTOR	10kΩ,1/6W
R214	QRD161J-562	RESISTOR	5.6kΩ,1/6W
R215	QRD161J-472	RESISTOR	4.7kΩ,1/6W
R216	QRD161J-223	RESISTOR	22kΩ,1/6W
R217	QRD161J-223	RESISTOR	22kΩ,1/6W
R218	QRD161J-562	RESISTOR	5.6kΩ,1/6W
R219	QRD161J-224	RESISTOR	220kΩ,1/6W
R220	QRD161J-224	RESISTOR	220kΩ,1/6W
R221	QRD161J-562	RESISTOR	5.6kΩ,1/6W
R222	QRD161J-103	RESISTOR	10kΩ,1/6W
R225	QRD161J-105	RESISTOR	1MΩ,1/6W
R229	QRD161J-102	RESISTOR	1kΩ,1/6W
R230	QRD161J-562	RESISTOR	5.6kΩ,1/6W

#⚠REF No.	PART No.	PART NAME,	DESCRIPTION
R231	QRV141F-1101AY	CMF RESISTOR	1.10kΩ,1/4W
R232	QRV141F-1001AY	CMF RESISTOR	1kΩ,1/4W
R233	QRD161J-332	RESISTOR	3.3kΩ,1/6W
R234	QRD161J-181	RESISTOR	180Ω,1/6W
R235	QRD161J-181	RESISTOR	180Ω,1/6W
R236	QRD161J-391	RESISTOR	390Ω,1/6W
R237	QRD161J-471	RESISTOR	470Ω,1/6W
R238	QRD161J-103	RESISTOR	10kΩ,1/6W
R240	QRD161J-102	RESISTOR	1kΩ,1/6W
R241	QRD161J-562	RESISTOR	5.6kΩ,1/6W
R242	QRD161J-102	RESISTOR	1kΩ,1/6W
R243	QRD161J-562	RESISTOR	5.6kΩ,1/6W
R244	QRV141F-9100A	CMF RESISTOR	910Ω,1/4W
R245	QRV141F-1001AY	CMF RESISTOR	1kΩ,1/4W
R246	QRD161J-102	RESISTOR	1kΩ,1/6W
R247	QRD161J-181	RESISTOR	180Ω,1/6W
R248	QRD161J-181	RESISTOR	180Ω,1/6W
R249	QRD161J-391	RESISTOR	390Ω,1/6W
R250	QRD161J-471	RESISTOR	470Ω,1/6W
R251	QRD161J-223	RESISTOR	22kΩ,1/6W
R253	QRD161J-102	RESISTOR	1kΩ,1/6W
R256	QRV141F-3301AY	CMF RESISTOR	3.30kΩ,1/4W
R257	QRV141F-1001AY	CMF RESISTOR	1kΩ,1/4W
R258	QRD161J-181	RESISTOR	180Ω,1/6W
R259	QRD161J-181	RESISTOR	180Ω,1/6W
R260	QRD161J-332	RESISTOR	3.3kΩ,1/6W
R261	QRD161J-221	RESISTOR	220Ω,1/6W
R262	QRD161J-221	RESISTOR	220Ω,1/6W
R263	QRD161J-103	RESISTOR	10kΩ,1/6W
R264	QRD161J-750	RESISTOR	75Ω,1/6W
R265	QRD161J-750	RESISTOR	75Ω,1/6W
R266	QRD161J-102	RESISTOR	1kΩ,1/6W
R269	QRD161J-103	RESISTOR	10kΩ,1/6W
R270	QRD161J-392	RESISTOR	3.9kΩ,1/6W
R271	QRD161J-182	RESISTOR	1.8kΩ,1/6W
R272	QRD161J-0R0	RESISTOR	0Ω,1/6W
R273	QRD161J-122	RESISTOR	1.2kΩ,1/6W
R274	QRD161J-183	RESISTOR	18kΩ,1/6W
R275	QRD161J-123	RESISTOR	12kΩ,1/6W
R276	QRD161J-562	RESISTOR	5.6kΩ,1/6W
R277	QRD161J-562	RESISTOR	5.6kΩ,1/6W
R278	QRD161J-393	RESISTOR	39kΩ,1/6W
R280	QRD161J-102	RESISTOR	1kΩ,1/6W
R281	QRD161J-222	RESISTOR	2.2kΩ,1/6W
R282	QRD161J-392	RESISTOR	3.9kΩ,1/6W
R283	QRD161J-681	RESISTOR	680Ω,1/6W
R284	QRD161J-151	RESISTOR	150Ω,1/6W
R285	QRD161J-0R0	RESISTOR	0Ω,1/6W
R286	QRD161J-333	RESISTOR	33kΩ,1/6W
R287	QRD161J-681	RESISTOR	680Ω,1/6W
R289	QRD161J-123	RESISTOR	12kΩ,1/6W
R290	QRD161J-183	RESISTOR	18kΩ,1/6W
R291	QRD161J-151	RESISTOR	150Ω,1/6W
R292	QRD161J-123	RESISTOR	12kΩ,1/6W
R293	QRD161J-223	RESISTOR	22kΩ,1/6W
R294	QRD161J-681	RESISTOR	680Ω,1/6W
R295	QRD161J-151	RESISTOR	150Ω,1/6W
R296	QRD161J-103	RESISTOR	10kΩ,1/6W
R297	QRD161J-103	RESISTOR	10kΩ,1/6W
R298	QRD161J-102	RESISTOR	1kΩ,1/6W
R301	QRD161J-182	RESISTOR	1.8kΩ,1/6W
R302	QRD161J-102	RESISTOR	1kΩ,1/6W
R303	QRD161J-123	RESISTOR	12kΩ,1/6W
R304	QRD161J-105	RESISTOR	1MΩ,1/6W
R305	QRD161J-102	RESISTOR	1kΩ,1/6W
R306	QRD161J-271	RESISTOR	270Ω,1/6W

#⚠REF No.	PART No.	PART NAME,	DESCRIPTION
R307	QRD161J-683	RESISTOR	68kΩ,1/6W
R308	QRD161J-103	RESISTOR	10kΩ,1/6W
R311	QRD161J-103	RESISTOR	10kΩ,1/6W
R312	QRD161J-103	RESISTOR	10kΩ,1/6W
R321	QRD161J-183	RESISTOR	18kΩ,1/6W
R322	QRD161J-332	RESISTOR	3.3kΩ,1/6W
R323	QRD161J-103	RESISTOR	10kΩ,1/6W
R324	QRD161J-103	RESISTOR	10kΩ,1/6W
R325	QRD161J-181	RESISTOR	180Ω,1/6W
R326	QRD161J-333	RESISTOR	33kΩ,1/6W
R327	QRD161J-153	RESISTOR	15kΩ,1/6W
R328	QRV141F-3900AY	CMF RESISTOR	390Ω,1/4W
R329	QRV141F-3000AY	CMF RESISTOR	300Ω,1/4W
R330	QRD161J-472	RESISTOR	4.7kΩ,1/6W
R331	QRD161J-103	RESISTOR	10kΩ,1/6W
R332	QRD161J-0R0	RESISTOR	0Ω,1/6W
R333	QRSA08J-392YN	RESISTOR	3.9kΩ,1/10W
R334	QRSA08J-472YN	RESISTOR	4.7kΩ,1/10W
R336	QRD161J-224	RESISTOR	220kΩ,1/6W
R337	QRD161J-102	RESISTOR	1kΩ,1/6W
R338	QRD161J-102	RESISTOR	1kΩ,1/6W
R339	QRV141F-2201AY	CMF RESISTOR	2.20kΩ,1/4W
R340	QRV141F-2201AY	CMF RESISTOR	2.20kΩ,1/4W
R347	QRSA08J-103YN	RESISTOR	10kΩ,1/10W
R348	QRD161J-271	RESISTOR	270Ω,1/6W
R350	QRD161J-221	RESISTOR	220Ω,1/6W
C1	QETC1AM-107	E CAPACITOR	100μF,10V
C2	QCFA1HZ-223	CAPACITOR	0.022μF,50V
C3	QCFA1HZ-223	CAPACITOR	0.022μF,50V
C4	QCFA1HZ-223	CAPACITOR	0.022μF,50V
C5	QCFA1EZ-333	CAPACITOR	0.033μF,25V
C6	QETC1CM-107	E CAPACITOR	100μF,16V
C7	QCFA1EZ-333	CAPACITOR	0.033μF,25V
C9	QCS31HJ-220	CAPACITOR	22pF,50V
C10	QCS31HJ-181	CAPACITOR	180pF,50V
C11	QCS31HJ-220	CAPACITOR	22pF,50V
C12	QCFA1HZ-223	CAPACITOR	0.022μF,50V
C13	QCS31HJ-221	CAPACITOR	220pF,50V
C14	QCS31HJ-681	CAPACITOR	680pF,50V
C15	QCS31HJ-221	CAPACITOR	220pF,50V
C16	QCFA1HZ-223	CAPACITOR	0.022μF,50V
C17	QCFA1HZ-103	CAPACITOR	0.01μF,50V
C18	QCSA1HJ-101	CAPACITOR	100pF,50V
C19	QCFA1HZ-223	CAPACITOR	0.022μF,50V
C20	QCFA1EZ-333	CAPACITOR	0.033μF,25V
C21	QENC1CM-106	NP E CAPACITOR	10μF,16V
C22	QCS31HJ-221	CAPACITOR	220pF,50V
C23	QCS31HJ-221	CAPACITOR	220pF,50V
C24	QCS31HJ-271	CAPACITOR	270pF,50V
C25	QCS31HJ-151	CAPACITOR	150pF,50V
C26	QCFA1EZ-104	CAPACITOR	0.1μF,25V
C27	QETC1CM-106	E CAPACITOR	10μF,16V
C28	QETC1CM-337	E CAPACITOR	330μF,16V
C29	QCFA1EZ-104	CAPACITOR	0.1μF,25V
C30	QCFA1EZ-104	CAPACITOR	0.1μF,25V
C31	QCYA1HJ-102	CAPACITOR	0.001μF,50V
C32	QCYA1HJ-102	CAPACITOR	0.001μF,50V
C33	QETC1CM-226	E CAPACITOR	22μF,16V
C34	QETC1HM-105	E CAPACITOR	1μF,50V
C35	QETC1AM-226	E CAPACITOR	22μF,10V
C36	QETC1AM-226	E CAPACITOR	22μF,10V
C37	QETC1CM-476	E CAPACITOR	47μF,16V
C38	QCFA1EZ-104	CAPACITOR	0.1μF,25V
C39	QCFA1EZ-104	CAPACITOR	0.1μF,25V
C40	QETC1AM-107	E CAPACITOR	100μF,10V

<19>

#⚠REF No.	PART No.	PART NAME,	DESCRIPTION
C41	QCFA1EZ-333	CAPACITOR	0.033µF,25V
C42	QCFA1EZ-333	CAPACITOR	0.033µF,25V
C43	QCS31HJ-151	CAPACITOR	150pF,50V
C44	QCFA1EZ-333	CAPACITOR	0.033µF,25V
C45	QETC1AM-107	E CAPACITOR	100µF,10V
C47	QETC1AM-107	E CAPACITOR	100µF,10V
C50	QETC1CM-476	E CAPACITOR	47µF,16V
C51	QCFA1EZ-104	CAPACITOR	0.1µF,25V
C52	QCFA1EZ-104	CAPACITOR	0.1µF,25V
C54	QCYA1EK-103	CAPACITOR	0.01µF,25V
C55	QCYA1EK-103	CAPACITOR	0.01µF,25V
C56	QCYA1EK-103	CAPACITOR	0.01µF,25V
C57	QCYA1EK-103	CAPACITOR	0.01µF,25V
C58	QETC1HM-225	E CAPACITOR	2.2µF,50V
C60	QETC1HM-225	E CAPACITOR	2.2µF,50V
C62	QETC1CM-106	E CAPACITOR	10µF,16V
C63	QETC1CM-106	E CAPACITOR	10µF,16V
C64	QETC1AM-477	E CAPACITOR	470µF,10V
C65	QETC0JM-107	E CAPACITOR	100µF,6.3V
C66	QETC1CM-337	E CAPACITOR	330µF,16V
C67	QETC1CM-336	E CAPACITOR	33µF,16V
C68	QETC1CM-337	E CAPACITOR	330µF,16V
C69	QCFA1EZ-104	CAPACITOR	0.1µF,25V
C70	QCFA1EZ-104	CAPACITOR	0.1µF,25V
C71	QCFA1HZ-223	CAPACITOR	0.022µF,50V
C72	QCSA1HJ-330	CAPACITOR	33pF,50V
C73	QCFA1HZ-223	CAPACITOR	0.022µF,50V
C74	QCFA1HZ-223	CAPACITOR	0.022µF,50V
C75	QETC1AM-226	E CAPACITOR	22µF,10V
C76	QETC0JM-226	E CAPACITOR	22µF,6.3V
C77	QETC1AM-226	E CAPACITOR	22µF,10V
C78	QETC1CM-106	E CAPACITOR	10µF,16V
C80	QETC1AM-477	E CAPACITOR	470µF,10V
C81	QETC0JM-107	E CAPACITOR	100µF,6.3V
C82	QETC1CM-337	E CAPACITOR	330µF,16V
C83	QEE81AM-156	E CAPACITOR	15µF,10V
C84	QETC1CM-476	E CAPACITOR	47µF,16V
C85	QCFA1EZ-104	CAPACITOR	0.1µF,25V
C86	QCFA1EZ-104	CAPACITOR	0.1µF,25V
C87	QCSA1HJ-151	CAPACITOR	150pF,50V
C88	QCFA1EZ-333	CAPACITOR	0.033µF,25V
C89	QCFA1HZ-103	CAPACITOR	0.01µF,50V
C90	QCSA1HJ-100	CAPACITOR	10pF,50V
C91	QCSA1HJ-150	CAPACITOR	15pF,50V
C92	QCSA1HJ-151	CAPACITOR	150pF,50V
C93	QCFA1EZ-333	CAPACITOR	0.033µF,25V
C94	QETC0JM-107	E CAPACITOR	100µF,6.3V
C95	QCSA1HJ-331	CAPACITOR	330pF,50V
C96	QETC1HM-104	E CAPACITOR	0.1µF,50V
C97	QCS31HJ-221	CAPACITOR	220pF,50V
C98	QCFA1HZ-103	CAPACITOR	0.01µF,50V
C99	QCSA1HJ-7R0	CAPACITOR	7pF,50V
C100	QETC1CM-106	E CAPACITOR	10µF,16V
C101	QCFA1HZ-103	CAPACITOR	0.01µF,50V
C102	QCSA1HJ-7R0	CAPACITOR	7pF,50V
C103	QCFA1HZ-103	CAPACITOR	0.01µF,50V
C104	QCFA1HZ-103	CAPACITOR	0.01µF,50V
C105	QCSA1HJ-7R0	CAPACITOR	7pF,50V
C106	QCFA1HZ-103	CAPACITOR	0.01µF,50V
C107	QETC0JM-476	E CAPACITOR	47µF,6.3V
C108	QCFA1EZ-104	CAPACITOR	0.1µF,25V
C109	QCFA1EZ-104	CAPACITOR	0.1µF,25V
C110	QETC1CM-106	E CAPACITOR	10µF,16V
C121	QCFA1HZ-103	CAPACITOR	0.01µF,50V
C127	QCYA1EK-103	CAPACITOR	0.01µF,25V
C128	QCFA1HZ-223	CAPACITOR	0.022µF,50V

#⚠REF No.	PART No.	PART NAME,	DESCRIPTION
C129	QCFA1HZ-103	CAPACITOR	0.01µF,50V
C130	QCFA1HZ-103	CAPACITOR	0.01µF,50V
C131	QCTA1CH-150	CAPACITOR	15pF,16V
C132	QCTA1CH-150	CAPACITOR	15pF,16V
C133	QCTA1CH-150	CAPACITOR	15pF,16V
C134	QCTA1CH-6R0	CAPACITOR	6pF,16V
C135	QCTA1CH-3R0	CAPACITOR	3pF,16V
C138	QCYA1EK-103	CAPACITOR	0.01µF,25V
C139	QETC1CM-107	E CAPACITOR	100µF,16V
C140	QCFA1EZ-104	CAPACITOR	0.1µF,25V
C141	QCFA1EZ-104	CAPACITOR	0.1µF,25V
C142	QETC1CM-476	E CAPACITOR	47µF,16V
C143	QCFA1EZ-104	CAPACITOR	0.1µF,25V
C144	QCFA1EZ-104	CAPACITOR	0.1µF,25V
C145	QETC1CM-476	E CAPACITOR	47µF,16V
C146	QCYA1EK-103	CAPACITOR	0.01µF,25V
C147	QCYA1HJ-103	CAPACITOR	0.01µF,50V
C148	QCYA1EK-103	CAPACITOR	0.01µF,25V
C149	QCYA1EK-103	CAPACITOR	0.01µF,25V
C150	QCYA1EK-103	CAPACITOR	0.01µF,25V
C151	QCYA1EK-103	CAPACITOR	0.01µF,25V
C152	QCYA1EK-103	CAPACITOR	0.01µF,25V
C153	QCYA1EK-103	CAPACITOR	0.01µF,25V
C154	QCTA1CH-6R0	CAPACITOR	6pF,16V
C155	QCTA1CH-6R0	CAPACITOR	6pF,16V
L1	PU48530-820J	COIL	82µH
L2	PU48530-100J	COIL	10µH
L3	PU48530-820J	COIL	82µH
L4	PU48530-331J	COIL	330µH
L5	PU48530-101J	COIL	100µH
L6	PU48530-331J	COIL	330µH
L7	PU48530-471J	COIL	470µH
L8	PU48530-221J	COIL	220µH
L9	PU48530-101J	COIL	100µH
L10	PU48530-680J	COIL	68µH
L11	PU48530-680J	COIL	68µH
L13	PU58201-8R2K	COIL	8.2µH
L14	QRD161J-0R0	COIL	
L15	PU58201-8R2K	COIL	8.2µH
L16	PU48530-4R7J	COIL	4.7µH
EQ1	PGZ01587	EQUALIZER	
EQ2	PGZ01588	EQUALIZER	
EQ3	PGZ01588	EQUALIZER	
DL1	PGZ01551	DELAY LINE	
DL3	PGZ01552	DELAY LINE	
DL4	PGZ00131-015	DELAY LINE	
DL5	PGZ00131-015	DELAY LINE	
SW1	PU54440	SWITCH	
EJ1	PGZ00582	EJECTOR, ×2	
RV1	PU53276	PLASTIC RIVET, ×4	
SLD1	PRD30781-02-03	SHIELD PLATE	
TP1	PU54983	TEST PIN, ×14	

#⚠REF No.	PART No.	PART NAME, DESCRIPTION	
CN1	PGZ00421-64	MALE CONNECTOR	

FMA PRE/REC BOARD ASSEMBLY<20>

#⚠REF No.	PART No.	PART NAME, DESCRIPTION	
PWBA	PRK30064C	FM A PRE AMP BOARD ASSY	
IC1	TA7742P	IC	
IC2	AN3920S	IC	
Q1	2SC2412K(S)	TRANSISTOR	
Q2	2SC2412K(S)	TRANSISTOR	
Q4	DTC124EK	TRANSISTOR	
Q5	2SC2412K(S)	TRANSISTOR	
Q8	2SC2412K(S)	TRANSISTOR	
Q9	2SC2412K(S)	TRANSISTOR	
Q10	2SC2412K(S)	TRANSISTOR	
Q11	2SC2412K(S)	TRANSISTOR	
R1	QRSA08J-100YN	RESISTOR	10Ω,1/10W
R2	QRSA08J-100YN	RESISTOR	10Ω,1/10W
R3	QRSA08J-152YN	RESISTOR	1.5kΩ,1/10W
R4	QRSA08J-152YN	RESISTOR	1.5kΩ,1/10W
R5	QRSA08J-151YN	RESISTOR	150Ω,1/10W
R6	QRSA08J-151YN	RESISTOR	150Ω,1/10W
R8	QRSA08J-0R0Y	RESISTOR	0Ω,1/10W
R9	QRSA08J-473YN	RESISTOR	47kΩ,1/10W
R11	QVZ3521-473	RESISTOR	47kΩ
R12	QRSA08J-102YN	RESISTOR	1kΩ,1/10W
R13	QRSA08J-105YN	RESISTOR	1MΩ,1/10W
R14	QRSA08J-124YN	RESISTER	
R15	QRSA08J-473YN	RESISTOR	47kΩ,1/10W
R16	QRSA08J-273YN	RESISTOR	27kΩ,1/10W
R17	QRSA08J-332YN	RESISTOR	3.3kΩ,1/10W
R18	QRSA08J-102YN	RESISTOR	1kΩ,1/10W
R19	QRSA08J-122YN	RESISTOR	1.2kΩ,1/10W
R20	QRSA08J-123YN	RESISTOR	12kΩ,1/10W
R21	QRSA08J-561YN	RESISTOR	560Ω,1/10W
R22	QRSA08J-123YN	RESISTOR	12kΩ,1/10W
R27	QRSA08J-222YN	RESISTOR	2.2kΩ,1/10W
R28	QRSA08J-222YN	RESISTOR	2.2kΩ,1/10W
R29	QRSA08J-272YN	RESISTOR	2.7kΩ,1/10W
R30	QRSA08J-272YN	RESISTOR	2.7kΩ,1/10W
R31	QRSA08J-273YN	RESISTOR	27kΩ,1/10W
R32	QRSA08J-273YN	RESISTOR	27kΩ,1/10W
R33	QRSA08J-273YN	RESISTOR	27kΩ,1/10W
R34	QRSA08J-273YN	RESISTOR	27kΩ,1/10W
R35	QRSA08J-561YN	RESISTOR	560Ω,1/10W
R36	QRSA08J-561YN	RESISTOR	560Ω,1/10W
R37	QRSA08J-102YN	RESISTOR	1kΩ,1/10W
R38	QRSA08J-561YN	RESISTOR	560Ω,1/10W
R39	QRSA08J-750YN	RESISTOR	75Ω,1/10W
R40	QRSA08J-103YN	RESISTOR	10kΩ,1/10W
R41	QRSA08J-332YN	RESISTOR	3.3kΩ,1/10W
R42	QRSA08J-332YN	RESISTOR	3.3kΩ,1/10W
R44	QRSA08J-222YN	RESISTOR	2.2kΩ,1/10W
R46	QRSA08J-0R0Y	RESISTOR	0Ω,1/10W
C1	QCTA1CH-221	CAPACITOR	220pF,16V
C2	QCTA1CH-221	CAPACITOR	220pF,16V
C3	QCYA1HK-103	CAPACITOR	0.01μF,50V
C4	QCYA1HK-103	CAPACITOR	0.01μF,50V
C5	QEE81CM-476	TANTAL CAPACITOR	47μF,16V
C6	QCYA1HK-103	CAPACITOR	0.01μF,50V
C7	QEE81EM-105	TANTAL CAPACITOR	1μF,25V
C8	QEE81EM-105	TANTAL CAPACITOR	1μF,25V
C9	QCYA1HK-103	CAPACITOR	0.01μF,50V
C10	QEK61HM-104	E CAPACITOR	0.1μF,50V
C11	QCYA1HK-103	CAPACITOR	0.01μF,50V
C12	QEK61HM-225	E CAPACITOR	2.2μF,50V
C13	QCYA1HK-103	CAPACITOR	0.01μF,50V
C14	QCYA1HK-103	CAPACITOR	0.01μF,50V
C15	QCTA1CH-5R0	CAPACITOR	5pF,16V
C16	QCTA1CH-221	CAPACITOR	220pF,16V
C17	QCTA1CH-331	CAPACITOR	330pF,16V
C18	QFN31HJ-682	M CAPACITOR	0.0068μF,50V
C19	QEK61AM-476	E CAPACITOR	47μF,10V
C20	QCYA1HK-103	CAPACITOR	0.01μF,50V
C21	QCYA1HK-103	CAPACITOR	0.01μF,50V
C22	QCYA1HK-103	CAPACITOR	0.01μF,50V
C23	QCYA1HK-103	CAPACITOR	0.01μF,50V
C24	QCYA1HK-103	CAPACITOR	0.01μF,50V
C25	QCYA1HK-103	CAPACITOR	0.01μF,50V
C26	QCYA1HK-103	CAPACITOR	0.01μF,50V
C27	QCYA1HK-103	CAPACITOR	0.01μF,50V
C28	QCYA1HK-103	CAPACITOR	0.01μF,50V
C29	QEK61AM-476	E CAPACITOR	47μF,10V
C30	QCYA1HK-103	CAPACITOR	0.01μF,50V
C31	QCYA1HK-103	CAPACITOR	0.01μF,50V
C32	QCTA1CH-121	CAPACITOR	120pF,16V
C33	QCTA1CH-121	CAPACITOR	120pF,16V
L1	PU53607-152	COIL	1.5mH
L2	PU48530-101J	COIL	100μH
L3	PU48530-101J	COIL	100μH
BPF1	PELN0374	BAND PASS FILTER	
BPF2	PU60610	BAND PASS FILTER(1.4MHZ)	
BPF3	PU60611	BAND PASS FILTER(1.8MHZ)	
T1	PU56175	S.TRANS	
T2	PU56175	S.TRANS	
TP1	PU54983	TEST PIN, ×3	
CN1	PU58844-6	CONNECTOR	
CN2	PU58844-5	CONNECTOR	
CN3	PU58844-10	CONNECTOR	
CN4	PU58844-3	CONNECTOR	

AUDIO 1 BOARD ASSEMBLY<21>

#⚠REF No.	PART No.	PART NAME, DESCRIPTION
PWBA	PRK10060C-06	AUDIO 1 BOARD ASSY
IC1	AN6394	IC
IC2	AN6394	IC
IC3	TA7629P	IC
IC4	TA7629P	IC
IC5	M50253P	IC
IC6	M50253P	IC
IC7	DT5A124E	TRANSISTOR
IC8	DT5A124E	TRANSISTOR
IC9	TA78L009AP	IC

#⚠REF No.	PART No.	PART NAME, DESCRIPTION	
IC10	TA78L009AP	IC	
IC11	M5220P	IC	
IC12	M5278D12	IC	
IC13	M5279L12	IC	
IC14	M5278D12	IC	
IC301	M5218AP	IC	
IC401	M5278D12	IC	
IC402	M5218AP	IC	
IC602	TC4066BF	IC	
IC603	M5218AP	IC	
IC604	M5218AP	IC	
IC605	M50255P	IC	
IC607	M5218AP	IC	
IC608	TC4053BF	IC	
IC609	TC4053BF	IC	
IC610	UPC393C	IC	
IC611	M5218AP	IC	
Q7	2SC2412K(RS)	TRANSISTOR	
Q8	2SC2412K(RS)	TRANSISTOR	
Q9	2SC2412K(RS)	TRANSISTOR	
Q10	2SC2412K(RS)	TRANSISTOR	
Q11	2SC2412K(RS)	TRANSISTOR	
Q12	2SC2412K(RS)	TRANSISTOR	
Q17	DTC124EK	TRANSISTOR	
Q18	DTC124EK	TRANSISTOR	
Q19	DTC124EK	TRANSISTOR	
Q20	DTC124EK	TRANSISTOR	
Q21	2SB1030R,S	TRANSISTOR	
Q22	2SB1030R,S	TRANSISTOR	
Q25	2SB1030R,S	TRANSISTOR	
Q26	2SB1030R,S	TRANSISTOR	
Q27	DTA124EK	TRANSISTOR	
Q28	DTA124EK	TRANSISTOR	
Q29	DTA124EK	TRANSISTOR	
Q30	DTA124EK	TRANSISTOR	
Q34	2SD973AR	TRANSISTOR	
Q35	2SB793AR	TRANSISTOR	
Q36	2SB1030R,S	TRANSISTOR	
Q37	2SK146(BV)	FE TRANSISTOR	
Q38	2SK146(BV)	FE TRANSISTOR	
Q39	DTC323TK	TRANSISTOR	
Q40	DTC323TK	TRANSISTOR	
Q41	DTA124EK	TRANSISTOR	
Q42	DTA124EK	TRANSISTOR	
Q407	2SD973AR	TRANSISTOR	
Q408	2SD973AR	TRANSISTOR	
Q409	2SD973AR	TRANSISTOR	
Q410	2SD973AR	TRANSISTOR	
Q411	2SD1423(RS)	TRANSISTOR	
Q412	2SD1423(RS)	TRANSISTOR	
Q413	2SD973AR	TRANSISTOR	
Q414	2SD973AR	TRANSISTOR	
Q415	2SC1846(R).	TRANSISTOR	
Q416	2SC1846(R)	TRANSISTOR	
Q417	2SC1846(R)	TRANSISTOR	
Q418	2SC1846(R)	TRANSISTOR	
Q419	2SD1423(RS)	TRANSISTOR	
Q420	2SD1423(RS)	TRANSISTOR	
Q421	2SC2878A,B	TRANSISTOR	
Q422	2SC2878A,B	TRANSISTOR	
Q423	2SC2878A,B	TRANSISTOR	
Q424	2SC2878A,B	TRANSISTOR	
Q425	2SB1030R,S	TRANSISTOR	
Q426	2SD1423(RS)	TRANSISTOR	
Q427	2SC2412K(RS)	TRANSISTOR	
Q428	2SC2412K(RS)	TRANSISTOR	
Q429	2SC2412K(RS)	TRANSISTOR	
Q431	DTC124EK	TRANSISTOR	
Q432	DTC124EK	TRANSISTOR	
Q601	DTC323TK	TRANSISTOR	
Q602	DTA124EK	TRANSISTOR	
Q603	DTC323TK	TRANSISTOR	
Q604	DTA124EK	TRANSISTOR	
Q605	DTC323TK	TRANSISTOR	
Q606	DTA124EK	TRANSISTOR	
Q608	DTC323TK	TRANSISTOR	
Q609	DTA124EK	TRANSISTOR	
Q610	2SC2412K(RS)	TRANSISTOR	
Q611	2SC2412K(RS)	TRANSISTOR	
Q612	2SC2412K(RS)	TRANSISTOR	
Q613	DTC124EK	TRANSISTOR	
Q614	2SB1030R,S	TRANSISTOR	
Q615	DTA124EK	TRANSISTOR	
D1	1SS133	DIODE	
D2	1SS133	DIODE	
D3	1SS133	DIODE	
D4	1SS133	DIODE	
D5	1SS133	DIODE	
D6	1SS133	DIODE	
DA601	DA204K	DIODE	
DA602	DA204K	DIODE	
DA603	DA204K	DIODE	
R7	QVZ3513-332	V RESISTOR	3.3kΩ
R8	QVZ3513-332	V RESISTOR	3.3kΩ
R9	QRSA08J-102YN	RESISTOR	1kΩ,1/10W
R10	QRSA08J-102YN	RESISTOR	1kΩ,1/10W
R11	QRSA08J-682YN	RESISTOR	6.8kΩ,1/10W
R12	QRSA08J-682YN	RESISTOR	6.8kΩ,1/10W
R13	QRSA08J-183YN	RESISTOR	18kΩ,1/10W
R14	QRSA08J-183YN	RESISTOR	18kΩ,1/10W
R15	QRSA08J-562YN	RESISTOR	5.6kΩ,1/10W
R16	QRSA08J-562YN	RESISTOR	5.6kΩ,1/10W
R17	QRSA08J-332YN	RESISTOR	3.3kΩ,1/10W
R18	QRSA08J-332YN	RESISTOR	3.3kΩ,1/10W
R21	QRSA08J-562YN	RESISTOR	5.6kΩ,1/10W
R22	QRSA08J-562YN	RESISTOR	5.6kΩ,1/10W
R23	QRSA08J-332YN	RESISTOR	3.3kΩ,1/10W
R24	QRSA08J-332YN	RESISTOR	3.3kΩ,1/10W
R25	QVZ3513-103	V RESISTOR	10kΩ
R26	QVZ3513-103	V RESISTOR	10kΩ
R27	QRSA08J-471YN	RESISTOR	470Ω,1/10W
R28	QRSA08J-471YN	RESISTOR	470Ω,1/10W
R29	QRSA08J-152YN	RESISTOR	1.5kΩ,1/10W
R30	QRSA08J-152YN	RESISTOR	1.5kΩ,1/10W
R31	QRSA08J-103YN	RESISTOR	10kΩ,1/10W
R32	QRSA08J-103YN	RESISTOR	10kΩ,1/10W
R41	QRSA08J-681YN	RESISTOR	680Ω,1/10W
R42	QRSA08J-681YN	RESISTOR	680Ω,1/10W
R43	QRSA08J-332YN	RESISTOR	3.3kΩ,1/10W
R44	QRSA08J-332YN	RESISTOR	3.3kΩ,1/10W
R45	QRSA08J-103YN	RESISTOR	10kΩ,1/10W
R46	QRSA08J-103YN	RESISTOR	10kΩ,1/10W

#⚠	REF No.	PART No.	PART NAME,	DESCRIPTION
	R47	QRSA08J-103YN	RESISTOR	10kΩ,1/10W
	R48	QRSA08J-103YN	RESISTOR	10kΩ,1/10W
	R49	QRSA08J-470YN	RESISTOR	47Ω,1/10W
	R50	QRSA08J-470YN	RESISTOR	47Ω,1/10W
	R51	QRSA08J-183YN	RESISTOR	18kΩ,1/10W
	R52	QRSA08J-183YN	RESISTOR	18kΩ,1/10W
	R53	QRSA08J-103YN	RESISTOR	10kΩ,1/10W
	R54	QRSA08J-103YN	RESISTOR	10kΩ,1/10W
	R55	QRSA08J-103YN	RESISTOR	10kΩ,1/10W
	R56	QRSA08J-103YN	RESISTOR	10kΩ,1/10W
	R63	QRSA08J-103YN	RESISTOR	10kΩ,1/10W
	R64	QRSA08J-103YN	RESISTOR	10kΩ,1/10W
	R67	QRSA08J-332YN	RESISTOR	3.3kΩ,1/10W
	R68	QRSA08J-332YN	RESISTOR	3.3kΩ,1/10W
	R71	QRSA08F-332YN	RESISTOR	3.3kΩ,1/10W
	R72	QRSA08F-332YN	RESISTOR	3.3kΩ,1/10W
	R73	QRSA08J-104YN	RESISTOR	100kΩ,1/10W
	R74	QRSA08J-104YN	RESISTOR	100kΩ,1/10W
	R75	QRSA08J-473YN	RESISTOR	47kΩ,1/10W
	R76	QRSA08J-473YN	RESISTOR	47kΩ,1/10W
	R77	QRSA08J-181YN	RESISTOR	180Ω,1/10W
	R78	QRSA08J-181YN	RESISTOR	180Ω,1/10W
	R83	QRSA08J-154YN	RESISTOR	150kΩ,1/10W
	R84	QRSA08J-154YN	RESISTOR	150kΩ,1/10W
	R85	QRSA08J-274YN	RESISTOR	270kΩ,1/10W
	R86	QRSA08J-274YN	RESISTOR	270kΩ,1/10W
	R87	QRSA08J-273YN	RESISTOR	27kΩ,1/10W
	R88	QRSA08J-273YN	RESISTOR	27kΩ,1/10W
	R89	QRSA08J-103YN	RESISTOR	10kΩ,1/10W
	R90	QRSA08J-103YN	RESISTOR	10kΩ,1/10W
	R91	QRSA08J-103YN	RESISTOR	10kΩ,1/10W
	R92	QRSA08J-103YN	RESISTOR	10kΩ,1/10W
	R93	QRSA08J-103YN	RESISTOR	10kΩ,1/10W
	R94	QRSA08J-103YN	RESISTOR	10kΩ,1/10W
	R95	QRSA08J-103YN	RESISTOR	10kΩ,1/10W
	R96	QRSA08J-103YN	RESISTOR	10kΩ,1/10W
	R97	QRSA08J-103YN	RESISTOR	10kΩ,1/10W
	R98	QRSA08J-103YN	RESISTOR	10kΩ,1/10W
	R99	QRD161J-152	RESISTOR	1.5kΩ,1/6W
	R100	QRD161J-152	RESISTOR	1.5kΩ,1/6W
	R101	QRSA08J-222YN	RESISTOR	2.2kΩ,1/10W
	R102	QRSA08J-222YN	RESISTOR	2.2kΩ,1/10W
	R103	QRSA08J-222YN	RESISTOR	2.2kΩ,1/10W
	R104	QRSA08J-222YN	RESISTOR	2.2kΩ,1/10W
	R105	QRSA08J-222YN	RESISTOR	2.2kΩ,1/10W
	R106	QRSA08J-222YN	RESISTOR	2.2kΩ,1/10W
	R107	QRSA08J-223YN	RESISTOR	22kΩ,1/10W
	R108	QRSA08J-223YN	RESISTOR	22kΩ,1/10W
	R109	QRSA08J-820YN	RESISTOR	82Ω,1/10W
	R110	QRSA08J-820YN	RESISTOR	82Ω,1/10W
	R111	QRSA08J-103YN	RESISTOR	10kΩ,1/10W
	R112	QRSA08J-103YN	RESISTOR	10kΩ,1/10W
	R113	QRSA08J-105YN	RESISTOR	1MΩ,1/10W
	R114	QRSA08J-105YN	RESISTOR	1MΩ,1/10W
	R115	QRSA08J-105YN	RESISTOR	1MΩ,1/10W
	R116	QRSA08J-105YN	RESISTOR	1MΩ,1/10W
	R117	QRSA08J-124YN	RESISTOR	120kΩ,1/10W
	R118	QRSA08J-124YN	RESISTOR	120kΩ,1/10W
	R119	QRSA08J-432YN	RESISTOR	4.3kΩ,1/10W
	R120	QRSA08J-432YN	RESISTOR	4.3kΩ,1/10W
	R121	QRSA08J-101YN	RESISTOR	100Ω,1/10W
	R122	QRSA08J-101YN	RESISTOR	100Ω,1/10W
	R123	QRSA08J-470YN	RESISTOR	47Ω,1/10W
	R124	QRSA08J-470YN	RESISTOR	47Ω,1/10W
	R125	QVZ3513-102	V RESISTOR	1kΩ
	R126	QVZ3513-102	V RESISTOR	1kΩ
	R127	QRSA08J-103YN	RESISTOR	10kΩ,1/10W
	R128	QRSA08J-103YN	RESISTOR	10kΩ,1/10W
	R129	QRSA08J-102YN	RESISTOR	1kΩ,1/10W
	R130	QRSA08J-102YN	RESISTOR	1kΩ,1/10W
	R131	QRSA08J-102YN	RESISTOR	1kΩ,1/10W
	R132	QRSA08J-102YN	RESISTOR	1kΩ,1/10W
	R133	QRSA08J-103YN	RESISTOR	10kΩ,1/10W
	R134	QRSA08J-103YN	RESISTOR	10kΩ,1/10W
	R136	QRSA08J-152YN	RESISTOR	1.5kΩ,1/10W
	R137	QRSA08J-152YN	RESISTOR	1.5kΩ,1/10W
	R301	QVZ3513-103	V RESISTOR	10kΩ
	R302	QVZ3513-103	V RESISTOR	10kΩ
	R303	QRSA08J-103YN	RESISTOR	10kΩ,1/10W
	R304	QRSA08J-103YN	RESISTOR	10kΩ,1/10W
	R305	QRSA08J-332YN	RESISTOR	3.3kΩ,1/10W
	R306	QRSA08J-332YN	RESISTOR	3.3kΩ,1/10W
	R307	QRSA08J-123YN	RESISTOR	12kΩ,1/10W
	R308	QRSA08J-123YN	RESISTOR	12kΩ,1/10W
	R309	QRSA08J-183YN	RESISTOR	18kΩ,1/10W
	R310	QRSA08J-183YN	RESISTOR	18kΩ,1/10W
	R311	QRSA08J-0R0Y	RESISTOR	0Ω,1/10W
	R312	QRSA08J-0R0Y	RESISTOR	0Ω,1/10W
	R313	QRSA08J-103YN	RESISTOR	10kΩ,1/10W
	R314	QRSA08J-103YN	RESISTOR	10kΩ,1/10W
	R315	QRSA08J-0R0Y	RESISTOR	0Ω,1/10W
	R316	QRSA08J-123YN	RESISTOR	12kΩ,1/10W
	R317	QRSA08J-331YN	RESISTOR	330Ω,1/10W
	R319	QVZ3513-331	V RESISTOR	330Ω
	R320	QVZ3513-331	V RESISTOR	330Ω
	R423	QRSA08J-224YN	RESISTOR	220kΩ,1/10W
	R424	QRSA08J-224YN	RESISTOR	220kΩ,1/10W
	R425	QVZ3513-104	V RESISTOR	100kΩ
	R426	QVZ3513-104	V RESISTOR	100kΩ
⚠	R427	QRZ0054-470	FUSIBLE RESISTOR	47Ω
⚠	R428	QRZ0054-470	FUSIBLE RESISTOR	47Ω
	R429	QRSA08J-123YN	RESISTOR	12kΩ,1/10W
	R430	QRSA08J-123YN	RESISTOR	12kΩ,1/10W
	R431	QRSA08J-391YN	RESISTOR	390Ω,1/10W
	R432	QRSA08J-391YN	RESISTOR	390Ω,1/10W
	R433	QRSA08J-681YN	RESISTOR	680Ω,1/10W
	R434	QRSA08J-681YN	RESISTOR	680Ω,1/10W
	R435	QRSA08J-562YN	RESISTOR	5.6kΩ,1/10W
	R436	QRSA08J-562YN	RESISTOR	5.6kΩ,1/10W
	R437	QRSA08J-103YN	RESISTOR	10kΩ,1/10W
	R438	QRSA08J-103YN	RESISTOR	10kΩ,1/10W
	R439	QRSA08J-103YN	RESISTOR	10kΩ,1/10W
	R440	QRSA08J-103YN	RESISTOR	10kΩ,1/10W
	R441	QRSA08J-562YN	RESISTOR	5.6kΩ,1/10W
	R442	QRSA08J-562YN	RESISTOR	5.6kΩ,1/10W
	R443	QRSA08J-103YN	RESISTOR	10kΩ,1/10W
	R444	QRSA08J-103YN	RESISTOR	10kΩ,1/10W
	R445	QRSA08J-221YN	RESISTOR	220Ω,1/10W
	R446	QRSA08J-221YN	RESISTOR	220Ω,1/10W
	R447	QRSA08J-122YN	RESISTOR	1.2kΩ,1/10W
	R448	QRSA08J-122YN	RESISTOR	1.2kΩ,1/10W
	R449	QRD161J-102	RESISTOR	1kΩ,1/6W
	R450	QRD161J-102	RESISTOR	1kΩ,1/6W
	R451	QRD161J-102	RESISTOR	1kΩ,1/6W
	R452	QRD161J-102	RESISTOR	1kΩ,1/6W
	R453	QRSA08J-331YN	RESISTOR	330Ω,1/10W
	R454	QRSA08J-331YN	RESISTOR	330Ω,1/10W
	R455	QVZ3513-332	V RESISTOR	3.3kΩ
	R456	QVZ3513-332	V RESISTOR	3.3kΩ
	R457	QRSA08J-105YN	RESISTOR	1MΩ,1/10W
	R458	QRSA08J-105YN	RESISTOR	1MΩ,1/10W
	R459	QRSA08J-123YN	RESISTOR	12kΩ,1/10W
	R460	QRSA08J-123YN	RESISTOR	12kΩ,1/10W

<21>

#⚠	REF No.	PART No.	PART NAME, DESCRIPTION	
	R461	QRSA08J-182YN	RESISTOR	1.8kΩ,1/10W
	R462	QRSA08J-182YN	RESISTOR	1.8kΩ,1/10W
	R465	QRSA08J-562YN	RESISTOR	5.6kΩ,1/10W
	R466	QRSA08J-562YN	RESISTOR	5.6kΩ,1/10W
	R467	QRSA08J-122YN	RESISTOR	1.2kΩ,1/10W
	R468	QRSA08J-122YN	RESISTOR	1.2kΩ,1/10W
	R469	QRSA08J-122YN	RESISTOR	1.2kΩ,1/10W
	R470	QRSA08J-122YN	RESISTOR	1.2kΩ,1/10W
	R471	QRSA08J-562YN	RESISTOR	5.6kΩ,1/10W
	R472	QRSA08J-562YN	RESISTOR	5.6kΩ,1/10W
⚠	R473	QRZ0054-180	RESISTOR	18Ω
⚠	R474	QRZ0054-180	RESISTOR	18Ω
	R475	QRSA08J-222YN	RESISTOR	2.2kΩ,1/10W
	R476	QRSA08J-222YN	RESISTOR	2.2kΩ,1/10W
	R477	QRSA08J-470YN	RESISTOR	47Ω,1/10W
	R478	QRSA08J-470YN	RESISTOR	47Ω,1/10W
	R479	QRSA08J-271YN	RESISTOR	270Ω,1/10W
	R480	QRSA08J-271YN	RESISTOR	270Ω,1/10W
	R481	QRSA08J-222YN	RESISTOR	2.2kΩ,1/10W
	R482	QRSA08J-222YN	RESISTOR	2.2kΩ,1/10W
	R483	QRSA08J-222YN	RESISTOR	2.2kΩ,1/10W
	R484	QRSA08J-222YN	RESISTOR	2.2kΩ,1/10W
	R485	QRSA08J-2R2YN	RESISTOR	2.2Ω,1/10W
	R486	QRSA08J-2R2YN	RESISTOR	2.2Ω,1/10W
	R487	QRSA08J-2R2YN	RESISTOR	2.2Ω,1/10W
	R488	QRSA08J-2R2YN	RESISTOR	2.2Ω,1/10W
	R489	QRSA08J-223YN	RESISTOR	22kΩ,1/10W
	R490	QRD161J-6R8	RESISTOR	6.8Ω,1/6W
	R491	QRSA08J-473YN	RESISTOR	47kΩ,1/10W
	R492	QRSA08J-472YN	RESISTOR	4.7kΩ,1/10W
	R493	QRSA08J-182YN	RESISTOR	1.8kΩ,1/10W
	R494	QRSA08J-273YN	RESISTOR	27kΩ,1/10W
	R495	QRSA08J-123YN	RESISTOR	12kΩ,1/10W
	R496	QRSA08J-222YN	RESISTOR	2.2kΩ,1/10W
	R497	QRSA08J-333YN	RESISTOR	33kΩ,1/10W
	R498	QRSA08J-683YN	RESISTOR	68kΩ,1/10W
	R499	QRSA08J-683YN	RESISTOR	68kΩ,1/10W
	R500	QRSA08J-223YN	RESISTOR	22kΩ,1/10W
	R501	QRSA08J-473YN	RESISTOR	47kΩ,1/10W
	R502	QRSA08J-473YN	RESISTOR	47kΩ,1/10W
	R503	QRSA08J-223YN	RESISTOR	22kΩ,1/10W
	R504	QRSA08J-102YN	RESISTOR	1kΩ,1/10W
	R505	QRSA08J-102YN	RESISTOR	1kΩ,1/10W
	R506	QRSA08J-102YN	RESISTOR	1kΩ,1/10W
⚠	R507	QRSA08J-102YN	RESISTOR	1kΩ,1/10W
	R508	QRSA08J-0R0Y	RESISTOR	0Ω,1/10W
	R512	QRD161J-151	RESISTOR	150Ω,1/6W
	R601	QRSA08J-184YN	RESISTOR	180kΩ,1/10W
	R602	QRSA08J-563YN	RESISTOR	56kΩ,1/10W
	R603	QRSA08J-333YN	RESISTOR	33kΩ,1/10W
	R604	QRSA08J-681YN	RESISTOR	680Ω,1/10W
	R605	QRSA08J-101YN	RESISTOR	100Ω,1/10W
	R606	QRSA08J-102YN	RESISTOR	1kΩ,1/10W
	R607	QRSA08J-472YN	RESISTOR	4.7kΩ,1/10W
	R608	QRSA08J-472YN	RESISTOR	4.7kΩ,1/10W
	R609	QRSA08J-823YN	RESISTOR	82kΩ,1/10W
	R610	QRSA08J-102YN	RESISTOR	1kΩ,1/10W
	R611	QRSA08J-683YN	RESISTOR	68kΩ,1/10W
	R612	QRSA08J-472YN	RESISTOR	4.7kΩ,1/10W
	R613	QRSA08J-472YN	RESISTOR	4.7kΩ,1/10W
	R614	QRSA08J-823YN	RESISTOR	82kΩ,1/10W
	R615	QRSA08J-823YN	RESISTOR	82kΩ,1/10W
	R616	QRSA08J-561YN	RESISTOR	560Ω,1/10W
	R617	QRSA08J-472YN	RESISTOR	4.7kΩ,1/10W
	R618	QRSA08J-472YN	RESISTOR	4.7kΩ,1/10W
	R619	QRSA08J-473YN	RESISTOR	47kΩ,1/10W

#⚠	REF No.	PART No.	PART NAME, DESCRIPTION	
	R620	QRSA08J-473YN	RESISTOR	47kΩ,1/10W
	R621	QRSA08J-333YN	RESISTOR	33kΩ,1/10W
	R622	QRSA08J-473YN	RESISTOR	47kΩ,1/10W
	R623	QRSA08J-102YN	RESISTOR	1kΩ,1/10W
	R624	QRSA08J-683YN	RESISTOR	68kΩ,1/10W
	R625	QRSA08J-0R0Y	RESISTOR	0Ω,1/10W
	R627	QRSA08J-103YN	RESISTOR	10kΩ,1/10W
	R628	QRSA08J-0R0Y	RESISTOR	0Ω,1/10W
	R629	QRSA08J-103YN	RESISTOR	10kΩ,1/10W
	R630	QRSA08J-473YN	RESISTOR	47kΩ,1/10W
	R631	QRSA08J-473YN	RESISTOR	47kΩ,1/10W
	R632	QRSA08J-103YN	RESISTOR	10kΩ,1/10W
	R633	QRSA08J-473YN	RESISTOR	47kΩ,1/10W
	R634	QRSA08J-473YN	RESISTOR	47kΩ,1/10W
	R635	QRSA08J-472YN	RESISTOR	4.7kΩ,1/10W
	R636	QRSA08J-472YN	RESISTOR	4.7kΩ,1/10W
	R643	QRSA08J-153YN	RESISTOR	15kΩ,1/10W
	R644	QRSA08J-153YN	RESISTOR	15kΩ,1/10W
	R645	QRSA08J-225YN	RESISTOR	2.2MΩ,1/10W
	R646	QRSA08J-225YN	RESISTOR	2.2MΩ,1/10W
	R647	QRSA08J-474YN	RESISTOR	470kΩ,1/10W
	R648	QRSA08J-103YN	RESISTOR	10kΩ,1/10W
	R649	QRSA08J-392YN	RESISTOR	3.9kΩ,1/10W
	R650	QRSA08J-153YN	RESISTOR	15kΩ,1/10W
	R651	QRSA08J-472YN	RESISTOR	4.7kΩ,1/10W
	R652	QRSA08J-472YN	RESISTOR	4.7kΩ,1/10W
	R653	QRSA08J-104YN	RESISTOR	100kΩ,1/10W
	R654	QRSA08J-223YN	RESISTOR	22kΩ,1/10W
	R655	QRSA08J-223YN	RESISTOR	22kΩ,1/10W
	R656	QRSA08J-474YN	RESISTOR	470kΩ,1/10W
	R657	QRSA08J-103YN	RESISTOR	10kΩ,1/10W
	R658	QRSA08J-392YN	RESISTOR	3.9kΩ,1/10W
	R659	QRSA08J-222YN	RESISTOR	2.2kΩ,1/10W
	R660	QRSA08J-105YN	RESISTOR	1MΩ,1/10W
	R661	QRSA08J-333YN	RESISTOR	33kΩ,1/10W
	R662	QRSA08J-333YN	RESISTOR	33kΩ,1/10W
	R663	QRSA08J-333YN	RESISTOR	33kΩ,1/10W
	R664	QRSA08J-472YN	RESISTOR	4.7kΩ,1/10W
	R665	QRSA08J-472YN	RESISTOR	4.7kΩ,1/10W
	R666	QRSA08J-473YN	RESISTOR	47kΩ,1/10W
	R668	QRSA08J-0R0Y	RESISTOR	0Ω,1/10W
	R671	QRSA08J-331YN	RESISTOR	330Ω,1/10W
	R672	QRSA08J-563YN	RESISTOR	56kΩ,1/10W
	R673	QRSA08J-182YN	RESISTOR	1.8kΩ,1/10W
	R674	QRSA08J-104YN	RESISTOR	100kΩ,1/10W
	R675	QRSA08J-104YN	RESISTOR	100kΩ,1/10W
	R676	QRSA08J-223YN	RESISTOR	22kΩ,1/10W
	R677	QRSA08J-223YN	RESISTOR	22kΩ,1/10W
	R682	QRD161J-750	RESISTOR	75Ω,1/6W
	R683	QRD161J-750	RESISTOR	75Ω,1/6W
	R684	QRSA08J-103YN	RESISTOR	10kΩ,1/10W
	R685	QRSA08J-103YN	RESISTOR	10kΩ,1/10W
	R686	QRSA08J-104YN	RESISTOR	100kΩ,1/10W
	R687	QRSA08J-104YN	RESISTOR	100kΩ,1/10W
	R688	QRSA08J-103YN	RESISTOR	10kΩ,1/10W
	R689	QRSA08J-103YN	RESISTOR	10kΩ,1/10W
	R690	QRSA08J-103YN	RESISTOR	10kΩ,1/10W
	R691	QRSA08J-103YN	RESISTOR	10kΩ,1/10W
	R692	QRSA08J-103YN	RESISTOR	10kΩ,1/10W
	R693	QRSA08J-103YN	RESISTOR	10kΩ,1/10W
	R694	QRSA08J-103YN	RESISTOR	10kΩ,1/10W
	R695	QRSA08J-103YN	RESISTOR	10kΩ,1/10W
	R696	QRSA08J-334YN	RESISTOR	330kΩ,1/10W
	R697	QRSA08J-334YN	RESISTOR	330kΩ,1/10W
	R698	QRSA08J-334YN	RESISTOR	330kΩ,1/10W
	R699	QRSA08J-334YN	RESISTOR	330kΩ,1/10W

#△REF No.	PART No.	PART NAME,	DESCRIPTION
R700	QRSA08J-102YN	RESISTOR	1kΩ,1/10W
R701	QRSA08J-102YN	RESISTOR	1kΩ,1/10W
R707	QRSA08J-103YN	RESISTOR	10kΩ,1/10W
R708	QRSA08J-103YN	RESISTOR	10kΩ,1/10W
R709	QRSA08J-103YN	RESISTOR	10kΩ,1/10W
R710	QRSA08J-103YN	RESISTOR	10kΩ,1/10W
C1	QETC1CM-336	E CAPACITOR	33μF,16V
C2	QETC1CM-336	E CAPACITOR	33μF,16V
C3	QETC1EM-335	E CAPACITOR	3.3μF,25V
C4	QETC1EM-335	E CAPACITOR	3.3μF,25V
C5	QETC1CM-106	E CAPACITOR	10μF,16V
C6	QETC1CM-106	E CAPACITOR	10μF,16V
C7	QCTA1CH-101	CAPACITOR	100pF,16V
C8	QCTA1CH-101	CAPACITOR	100pF,16V
C9	QETC1HM-105	E CAPACITOR	1μF,50V
C10	QETC1HM-105	E CAPACITOR	1μF,50V
C11	QETC1EM-335	E CAPACITOR	3.3μF,25V
C12	QETC1EM-335	E CAPACITOR	3.3μF,25V
C13	QETC1CM-106	E CAPACITOR	10μF,16V
C14	QETC1CM-106	E CAPACITOR	10μF,16V
C15	QETC1CM-106	E CAPACITOR	10μF,16V
C16	QETC1CM-106	E CAPACITOR	10μF,16V
C17	QETC0JM-107	E CAPACITOR	100μF,6.3V
C18	QETC0JM-107	E CAPACITOR	100μF,6.3V
C19	QFN31HJ-103	M CAPACITOR	0.01μF,50V
C20	QFN31HJ-103	M CAPACITOR	0.01μF,50V
C21	QFV71HJ-684	TF CAPACITOR	0.68μF,50V
C22	QFV71HJ-684	TF CAPACITOR	0.68μF,50V
C23	QETC1CM-106	E CAPACITOR	10μF,16V
C24	QETC1CM-106	E CAPACITOR	10μF,16V
C25	QFN31HJ-472	M CAPACITOR	0.0047μF,50V
C26	QFN31HJ-472	M CAPACITOR	0.0047μF,50V
C27	QETC1CM-106	E CAPACITOR	10μF,16V
C28	QETC1CM-106	E CAPACITOR	10μF,16V
C29	QFN31HJ-183	M CAPACITOR	0.018μF,50V
C30	QFN31HJ-183	M CAPACITOR	0.018μF,50V
C31	QFN31HJ-103	M CAPACITOR	0.01μF,50V
C32	QFN31HJ-103	M CAPACITOR	0.01μF,50V
C33	QETC1HM-105	E CAPACITOR	1μF,50V
C34	QETC1HM-105	E CAPACITOR	1μF,50V
C37	QETC1CM-226	E CAPACITOR	22μF,16V
C38	QETC1CM-226	E CAPACITOR	22μF,16V
C39	QETC1CM-106	E CAPACITOR	10μF,16V
C40	QETC1CM-106	E CAPACITOR	10μF,16V
C41	QFN31HJ-333	M CAPACITOR	0.033μF,50V
C42	QFN31HJ-333	M CAPACITOR	0.033μF,50V
C43	QFP32AJ-112	PP CAPACITOR	0.0011μF,100V
C44	QFP32AJ-112	PP CAPACITOR	0.0011μF,100V
C47	QETC1HM-225	E CAPACITOR	2.2μF,50V
C48	QETC1HM-225	E CAPACITOR	2.2μF,50V
C49	QETC1CM-337	E CAPACITOR	330μF,16V
C50	QETC1CM-337	E CAPACITOR	330μF,16V
C51	QETC1CM-337	E CAPACITOR	330μF,16V
C52	QETC1CM-337	E CAPACITOR	330μF,16V
C53	QETC1CM-227	E CAPACITOR	220μF,16V
C54	QETC1CM-227	E CAPACITOR	220μF,16V
C55	QFP32AF-273M	PP CAPACITOR	0.027μF,100V
C56	QFP32AF-273M	PP CAPACITOR	0.027μF,100V
C57	QETC1EM-335	E CAPACITOR	3.3μF,25V
C58	QETC1EM-335	E CAPACITOR	3.3μF,25V
C59	QFP32AF-472M	PP CAPACITOR	0.0047μF,100V
C60	QFP32AF-472M	PP CAPACITOR	0.0047μF,100V
C61	QFP32AF-562M	PP CAPACITOR	0.0056μF,100V
C62	QFP32AF-562M	PP CAPACITOR	0.0056μF,100V
C63	QFN31HJ-122	M CAPACITOR	0.0012μF,50V
C64	QFN31HJ-122	M CAPACITOR	0.0012μF,50V
C65	QETC1CM-226	E CAPACITOR	22μF,16V
C66	QETC1CM-226	E CAPACITOR	22μF,16V
C67	QEBC1HM-334	E CAPACITOR	0.33μF,50V
C68	QEBC1HM-334	E CAPACITOR	0.33μF,50V
C69	QEBC1HM-104	E CAPACITOR	0.1μF,50V
C70	QEBC1HM-104	E CAPACITOR	0.1μF,50V
C71	QENC1CM-106	NP E CAPACITOR	10μF,16V
C72	QENC1CM-106	NP E CAPACITOR	10μF,16V
C73	QFN31HJ-473	M CAPACITOR	0.047μF,50V
C74	QFN31HJ-473	M CAPACITOR	0.047μF,50V
C75	QFN31HJ-122	M CAPACITOR	0.0012μF,50V
C76	QFN31HJ-122	M CAPACITOR	0.0012μF,50V
C77	QETC1CM-106	E CAPACITOR	10μF,16V
C78	QETC1CM-106	E CAPACITOR	10μF,16V
C80	QCYA1HK-223	CAPACITOR	0.022μF,50V
C81	QETC1CM-476	E CAPACITOR	47μF,16V
C83	QENC1CM-106	NP E CAPACITOR	10μF,16V
C84	QENC1CM-106	NP E CAPACITOR	10μF,16V
C91	QCSA1HJ-122	CAPACITOR	0.0012μF,50V
C92	QCSA1HJ-122	CAPACITOR	0.0012μF,50V
C93	QFV71HJ-274	TF CAPACITOR	0.27μF,50V
C94	QFV71HJ-274	TF CAPACITOR	0.27μF,50V
C95	QEBC1CM-106	E CAPACITOR	10μF,16V
C96	QEBC1CM-106	E CAPACITOR	10μF,16V
C97	QFN31HJ-273	M CAPACITOR	0.027μF,50V
C98	QFN31HJ-273	M CAPACITOR	0.027μF,50V
C99	QCTA1CH-101	CAPACITOR	100pF,16V
C100	QCTA1CH-101	CAPACITOR	100pF,16V
C101	QEE80JM-107	T CAPACITOR	100μF,6.3V
C102	QEE80JM-107	T CAPACITOR	100μF,6.3V
C103	QETC1CM-337	E CAPACITOR	330μF,16V
C104	QETC1CM-337	E CAPACITOR	330μF,16V
C105	QETC1CM-337	E CAPACITOR	330μF,16V
C106	QETC1CM-337	E CAPACITOR	330μF,16V
C107	QFN31HJ-183	M CAPACITOR	0.018μF,50V
C108	QFN31HJ-183	M CAPACITOR	0.018μF,50V
C113	QCYA1HJ-103	CAPACITOR	0.01μF,50V
C114	QETC1EM-107	E CAPACITOR	100μF,25V
C115	QETC1CM-337	E CAPACITOR	330μF,16V
C116	QCYA1HK-103	CAPACITOR	0.01μF,50V
C117	QCYA1HK-103	CAPACITOR	0.01μF,50V
C119	QETC1CM-337	E CAPACITOR	330μF,16V
C120	QCYA1HK-103	CAPACITOR	0.01μF,50V
C121	QETC1CM-337	E CAPACITOR	330μF,16V
C122	QCYA1HK-103	CAPACITOR	0.01μF,50V
C123	QFN31HJ-152	M CAPACITOR	0.0015μF,50V
C124	QFN31HJ-152	M CAPACITOR	0.0015μF,50V
C125	QCTA1CH-271	CAPACITOR	270pF,16V
C126	QCTA1CH-271	CAPACITOR	270pF,16V
C301	QCTA1CH-101	CAPACITOR	100pF,16V
C302	QCTA1CH-101	CAPACITOR	100pF,16V
C303	QFN31HJ-822	M CAPACITOR	0.0082μF,50V
C304	QFN31HJ-822	M CAPACITOR	0.0082μF,50V
C307	QFN31HJ-473	M CAPACITOR	0.047μF,50V
C308	QFN31HJ-473	M CAPACITOR	0.047μF,50V
C309	QENC1CM-106	NP E CAPACITOR	10μF,16V
C310	QENC1CM-106	NP E CAPACITOR	10μF,16V
C311	QFN31HJ-104	M CAPACITOR	0.1μF,50V
C312	QEBC1CM-106	E CAPACITOR	10μF,16V
C417	QFN31HJ-682	M CAPACITOR	0.0068μF,50V
C418	QFN31HJ-682	M CAPACITOR	0.0068μF,50V
C419	QFN31HJ-682	M CAPACITOR	0.0068μF,50V
C420	QFN31HJ-682	M CAPACITOR	0.0068μF,50V

#⚠REF No.	PART No.	PART NAME,	DESCRIPTION
C421	QETC1CM-476	E CAPACITOR	47μF,16V
C422	QETC1CM-476	E CAPACITOR	47μF,16V
C423	QETC1CM-476	E CAPACITOR	47μF,16V
C424	QETC1CM-476	E CAPACITOR	47μF,16V
C425	QETC1CM-476	E CAPACITOR	47μF,16V
C426	QETC1CM-476	E CAPACITOR	47μF,16V
C427	QCYA1HK-103	CAPACITOR	0.01μF,50V
C428	QCYA1HK-103	CAPACITOR	0.01μF,50V
C429	QCYA1HK-103	CAPACITOR	0.01μF,50V
C430	QCYA1HK-103	CAPACITOR	0.01μF,50V
C433	QCTA1CH-121	CAPACITOR	120pF,16V
C434	QCTA1CH-121	CAPACITOR	120pF,16V
C435	QFP32AJ-561	PP CAPACITOR	560pF,100V
C436	QFP32AJ-561	PP CAPACITOR	560pF,100V
C437	QFN31HJ-682	M CAPACITOR	0.0068μF,50V
C438	QFN31HJ-682	M CAPACITOR	0.0068μF,50V
C439	QFN31HJ-682	M CAPACITOR	0.0068μF,50V
C440	QFN31HJ-682	M CAPACITOR	0.0068μF,50V
C441	QETC0JM-107	E CAPACITOR	100μF,6.3V
C442	QETC0JM-107	E CAPACITOR	100μF,6.3V
C443	QFP32AJ-223M	PP CAPACITOR	0.022μF,100V
C444	QFP32AJ-223M	PP CAPACITOR	0.022μF,100V
C445	QCYA1HK-103	CAPACITOR	0.01μF,50V
C446	QETC1CM-476	E CAPACITOR	47μF,16V
C447	QETC1CM-476	E CAPACITOR	47μF,16V
C448	QCYA1HK-103	CAPACITOR	0.01μF,50V
C449	QFN31HJ-102	M CAPACITOR	0.001μF,50V
C450	QFN31HJ-332	M CAPACITOR	0.0033μF,50V
C451	QETC1CM-226	E CAPACITOR	22μF,16V
C452	QFP32AJ-333	PP CAPACITOR	0.033μF,100V
C453	QCYA1HK-103	CAPACITOR	0.01μF,50V
C454	QETC1CM-107	E CAPACITOR	100μF,16V
C455	QETC1CM-107	E CAPACITOR	100μF,16V
C456	QCYA1HK-103	CAPACITOR	0.01μF,50V
C457	QFP32AJ-222	PP CAPACITOR	0.0022μF,100V
C458	QFP32AJ-392	PP CAPACITOR	0.0039μF,100V
C459	QETC1CM-227	E CAPACITOR	220μF,16V
C460	QFN31HJ-682	M CAPACITOR	0.0068μF,50V
C461	QFN31HJ-682	M CAPACITOR	0.0068μF,50V
C463	QETC1CM-476	E CAPACITOR	47μF,16V
C464	QCYA1HK-103	CAPACITOR	0.01μF,50V
C465	QETC1CM-476	E CAPACITOR	47μF,16V
C466	QCYA1HK-103	CAPACITOR	0.01μF,50V
C467	QCYA1HK-103	CAPACITOR	0.01μF,50V
C468	QETC1CM-476	E CAPACITOR	47μF,16V
C469	QCYA1HK-103	CAPACITOR	0.01μF,50V
C470	QEE81EM-105	T CAPACITOR	1μF,25V
C471	QETC1CM-107	E CAPACITOR	100μF,16V
C472	QCYA1HK-103	CAPACITOR	0.01μF,50V
C473	QETC1CM-476	E CAPACITOR	47μF,16V
C474	QETC1CM-476	E CAPACITOR	47μF,16V
C475	QFN31HJ-473	M CAPACITOR	0.047μF,50V
C476	QFN31HJ-473	M CAPACITOR	0.047μF,50V
C477	QFN31HJ-473	M CAPACITOR	0.047μF,50V
C478	QFN31HJ-473	M CAPACITOR	0.047μF,50V
C479	QETC1CM-476	E CAPACITOR	47μF,16V
C480	QETC1CM-476	E CAPACITOR	47μF,16V
C601	QCTA1CH-271	CAPACITOR	270pF,16V
C602	QFN31HJ-153	M CAPACITOR	0.015μF,50V
C604	QEBC1EM-475	E CAPACITOR	4.7μF,25V
C605	QETC1CM-107	E CAPACITOR	100μF,16V
C606	QETC1CM-227	E CAPACITOR	220μF,16V
C608	QETC1CM-226	E CAPACITOR	22μF,16V
C609	QETC1CM-226	E CAPACITOR	22μF,16V
C611	QETC1CM-107	E CAPACITOR	100μF,16V
C612	QETC1CM-476	E CAPACITOR	47μF,16V
C613	QETC1CM-107	E CAPACITOR	100μF,16V
C614	QETC1CM-226	E CAPACITOR	22μF,16V
C615	QETC1CM-106	E CAPACITOR	10μF,16V
C617	QETC1CM-226	E CAPACITOR	22μF,16V
C620	QETC1CM-226	E CAPACITOR	22μF,16V
C621	QETC1CM-226	E CAPACITOR	22μF,16V
C622	QETC1CM-107	E CAPACITOR	100μF,16V
C626	QENC1AM-226	E CAPACITOR	22μF,10V
C627	QENC1AM-226	E CAPACITOR	22μF,10V
C628	QENC1AM-226	E CAPACITOR	22μF,10V
C629	QETC1CM-336	E CAPACITOR	33μF,16V
C630	QETC1CM-336	E CAPACITOR	33μF,16V
C631	QETC1CM-336	E CAPACITOR	33μF,16V
C632	QETC1CM-336	E CAPACITOR	33μF,16V
C633	QCTA1CH-120	CAPACITOR	12pF,16V
C635	QETC1CM-227	E CAPACITOR	220μF,16V
C636	QETC1CM-227	E CAPACITOR	220μF,16V
C639	QETC1CM-107	E CAPACITOR	100μF,16V
C641	QETC1CM-107	E CAPACITOR	100μF,16V
C642	QETC1CM-476	E CAPACITOR	47μF,16V
C643	QETC1CM-476	E CAPACITOR	47μF,16V
C644	QETC1CM-107	E CAPACITOR	100μF,16V
C645	QETC1CM-107	E CAPACITOR	100μF,16V
C646	QETC1EM-335	E CAPACITOR	3.3μF,25V
C647	QETC1CM-106	E CAPACITOR	10μF,16V
C648	QETC1CM-336	E CAPACITOR	33μF,16V
C649	QCYA1HK-103	CAPACITOR	0.01μF,50V
C650	QETC1CM-476	E CAPACITOR	47μF,16V
C651	QETC1CM-107	E CAPACITOR	100μF,16V
C652	QETC1CM-107	E CAPACITOR	100μF,16V
C653	QCTA1CH-100	CAPACITOR	10pF,16V
C654	QETC1CM-107	E CAPACITOR	100μF,16V
C655	QCTA1CH-221	CAPACITOR	220pF,16V
L3	PGZ00917-822	COIL	
L4	PGZ00917-822	COIL	
L5	PGZ00121-472	COIL	
L6	PGZ00121-472	COIL	
L7	PGZ00917-472	COIL	
L8	PGZ00917-472	COIL	
L9	PU30771-2	COIL	
L10	PU30771-2	COIL	
L301	PU30771-9	COIL	
L302	PU30771-9	COIL	
L402	PU53607-152	COIL	1.5mH
L403	PU53607-152	COIL	1.5mH
L404	PU53607-152	COIL	1.5mH
L405	PU30771-9	COIL	
L601	PU30771-2	COIL	
LPF1	PGZ01056	LOW PASS FILTER	
LPF2	PGZ01056	LOW PASS FILTER	
RY1	PU55259	RELAY	
RY2	PU55259	RELAY	
RY3	PU55260	RELAY	
RY4	PU55260	RELAY	
TH401	ERT-D2FHL102S	THERMISTOR	
TH402	ERT-D2FHL102S	THERMISTOR	
TH403	ERT-D2FGL301S	THERMISTOR	
TH404	ERT-D2FGL301S	THERMISTOR	

#⚠	REF No.	PART No.	PART NAME,	DESCRIPTION
⚠	T401	PGZ00699	TRANS	
⚠	T402	PGZ00699	TRANS	
⚠	T403	PGZ00804	TRANS	
⚠	T404	PGZ00804	TRANS	
⚠	T405	PU60321	OSC TRANSFORMER	
	CL1	PGZ01377-03	STYLE PIN, ×5	
	TP1	PU54983	TEST PIN, ×13	
	CN1	PU58844-4	CONNECTOR	
	CN2	PU58844-2	CONNECTOR	
	CN3	PU58844-2Y	CONNECTOR	
	CN4	PU58844-4R	CONNECTOR	
	CN5	PU58844-3	CONNECTOR	
	CN6	PU58844-3R	CONNECTOR	
	CN7	PU58844-3R	CONNECTOR	
	CN8	PU58844-5	CONNECTOR	
	CN9	PU58844-4	CONNECTOR	
	CN10	PU58844-5	CONNECTOR	
	CN11	PU58844-2	CONNECTOR	
	CN12	PU58844-8	CONNECTOR	

AUDIO 2 BOARD ASSEMBLY<22>

#⚠	REF No.	PART No.	PART NAME,	DESCRIPTION
	PWBA	PRK10061A-02	AUDIO 2 BOARD ASSY	
	STK1	PRD30072-59	STICKER	
	IC1	M5201L	IC	
	IC2	M5201L	IC	
	IC3	M5201L	IC	
	IC4	M5201L	IC	
	IC5	M5201L	IC	
	IC6	M5201L	IC	
	IC7	M5201L	IC	
	IC8	M5201L	IC	
	IC9	M5218AL	IC	
	IC10	M5218AL	IC	
	IC11	M50253P	IC	
	IC12	M5278L12	IC	
	IC13	M5278L05	IC	
	Q1	DTC323TS	TRANSISTOR	
	Q2	DTC323TS	TRANSISTOR	
	Q3	DTC323TS	TRANSISTOR	
	Q4	DTC323TS	TRANSISTOR	
	Q5	DTC323TS	TRANSISTOR	
	Q6	DTC323TS	TRANSISTOR	
	Q7	DTC323TS	TRANSISTOR	
	Q8	DTC323TS	TRANSISTOR	
	Q9	DTC323TS	TRANSISTOR	
	Q10	DTC124ES	TRANSISTOR	
	Q11	DTA124ES	TRANSISTOR	
	Q12	2SB1030R,S	TRANSISTOR	
	Q13	2SC1740S(RS)	TRANSISTOR	
	Q14	2SC1740S(RS)	TRANSISTOR	
	Q15	DTC323TS	TRANSISTOR	
	Q16	DTC323TS	TRANSISTOR	
	Q17	DTC323TS	TRANSISTOR	
	Q18	DTC323TS	TRANSISTOR	
	Q19	DTC323TS	TRANSISTOR	
	Q20	DTC323TS	TRANSISTOR	
	Q21	DTA114ES	TRANSISTOR	
	Q22	DTA114ES	TRANSISTOR	
	Q23	DTA114ES	TRANSISTOR	
	Q24	DTA114ES	TRANSISTOR	
	D1	1SS133	DIODE	
	D2	1SS133	DIODE	
	D3	1SS133	DIODE	
	R1	QRD161J-472	RESISTOR	4.7kΩ,1/6W
	R2	QRD161J-472	RESISTOR	4.7kΩ,1/6W
	R3	QRD161J-472	RESISTOR	4.7kΩ,1/6W
	R4	QRD161J-472	RESISTOR	4.7kΩ,1/6W
	R5	QRD161J-472	RESISTOR	4.7kΩ,1/6W
	R6	QRD161J-472	RESISTOR	4.7kΩ,1/6W
	R7	QRD161J-472	RESISTOR	4.7kΩ,1/6W
	R8	QRD161J-472	RESISTOR	4.7kΩ,1/6W
	R9	QRD161J-104	RESISTOR	100kΩ,1/6W
	R10	QRD161J-104	RESISTOR	100kΩ,1/6W
	R11	QRD161J-104	RESISTOR	100kΩ,1/6W
	R12	QRD161J-104	RESISTOR	100kΩ,1/6W
	R13	QRD161J-104	RESISTOR	100kΩ,1/6W
	R14	QRD161J-104	RESISTOR	100kΩ,1/6W
	R15	QRD161J-104	RESISTOR	100kΩ,1/6W
	R16	QRD161J-104	RESISTOR	100kΩ,1/6W
	R17	QRD161J-102	RESISTOR	1kΩ,1/6W
	R18	QRD161J-102	RESISTOR	1kΩ,1/6W
	R19	QRD161J-102	RESISTOR	1kΩ,1/6W
	R20	QRD161J-102	RESISTOR	1kΩ,1/6W
	R21	QRD161J-683	RESISTOR	68kΩ,1/6W
	R22	QRD161J-683	RESISTOR	68kΩ,1/6W
	R23	QRD161J-683	RESISTOR	68kΩ,1/6W
	R24	QRD161J-683	RESISTOR	68kΩ,1/6W
	R25	QRD161J-472	RESISTOR	4.7kΩ,1/6W
	R26	QRD161J-472	RESISTOR	4.7kΩ,1/6W
	R27	QRD161J-472	RESISTOR	4.7kΩ,1/6W
	R28	QRD161J-472	RESISTOR	4.7kΩ,1/6W
	R29	QRD161J-472	RESISTOR	4.7kΩ,1/6W
	R30	QRD161J-472	RESISTOR	4.7kΩ,1/6W
	R31	QRD161J-472	RESISTOR	4.7kΩ,1/6W
	R32	QRD161J-472	RESISTOR	4.7kΩ,1/6W
	R33	QRD161J-104	RESISTOR	100kΩ,1/6W
	R34	QRD161J-104	RESISTOR	100kΩ,1/6W
	R35	QRD161J-104	RESISTOR	100kΩ,1/6W
	R36	QRD161J-104	RESISTOR	100kΩ,1/6W
	R37	QRD161J-104	RESISTOR	100kΩ,1/6W
	R38	QRD161J-104	RESISTOR	100kΩ,1/6W
	R39	QRD161J-104	RESISTOR	100kΩ,1/6W
	R40	QRD161J-104	RESISTOR	100kΩ,1/6W
	R41	QRD161J-473	RESISTOR	47kΩ,1/6W
	R42	QRD161J-473	RESISTOR	47kΩ,1/6W
	R43	QRD161J-473	RESISTOR	47kΩ,1/6W
	R44	QRD161J-473	RESISTOR	47kΩ,1/6W
	R45	QRD161J-473	RESISTOR	47kΩ,1/6W
	R46	QRD161J-473	RESISTOR	47kΩ,1/6W
	R47	QRD161J-473	RESISTOR	47kΩ,1/6W
	R48	QRD161J-473	RESISTOR	47kΩ,1/6W
	R49	QRD161J-473	RESISTOR	47kΩ,1/6W
	R50	QRD161J-473	RESISTOR	47kΩ,1/6W
	R51	QRD161J-331	RESISTOR	330Ω,1/6W
	R52	QRD161J-331	RESISTOR	330Ω,1/6W
	R53	QRD161J-683	RESISTOR	68kΩ,1/6W
	R54	QRD161J-683	RESISTOR	68kΩ,1/6W
	R55	QRD161J-683	RESISTOR	68kΩ,1/6W

<22>

#⚠REF No.	PART No.	PART NAME,	DESCRIPTION
R56	QRD161J-683	RESISTOR	68kΩ,1/6W
R57	QRD161J-333	RESISTOR	33kΩ,1/6W
R58	QRD161J-333	RESISTOR	33kΩ,1/6W
R59	QRD161J-333	RESISTOR	33kΩ,1/6W
R60	QRD161J-333	RESISTOR	33kΩ,1/6W
R61	QRD161J-333	RESISTOR	33kΩ,1/6W
R62	QRD161J-333	RESISTOR	33kΩ,1/6W
R63	QRD161J-333	RESISTOR	33kΩ,1/6W
R64	QRD161J-333	RESISTOR	33kΩ,1/6W
R65	QRD161J-472	RESISTOR	4.7kΩ,1/6W
R66	QRD161J-472	RESISTOR	4.7kΩ,1/6W
R67	QRD161J-104	RESISTOR	100kΩ,1/6W
R68	QRD161J-104	RESISTOR	100kΩ,1/6W
R69	QRD161J-104	RESISTOR	100kΩ,1/6W
R70	QRD161J-104	RESISTOR	100kΩ,1/6W
R71	QRD161J-104	RESISTOR	100kΩ,1/6W
R72	QRD161J-104	RESISTOR	100kΩ,1/6W
R73	QRD161J-331	RESISTOR	330Ω,1/6W
R74	QRD161J-331	RESISTOR	330Ω,1/6W
R75	QRD161J-683	RESISTOR	68kΩ,1/6W
R76	QRD161J-683	RESISTOR	68kΩ,1/6W
R77	QRD161J-152	RESISTOR	1.5kΩ,1/6W
R78	QRD161J-152	RESISTOR	1.5kΩ,1/6W
R79	QRD161J-103	RESISTOR	10kΩ,1/6W
R80	QRD161J-103	RESISTOR	10kΩ,1/6W
R81	QRD161J-223	RESISTOR	22kΩ,1/6W
R82	QRD161J-223	RESISTOR	22kΩ,1/6W
R83	QRD161J-821	RESISTOR	820Ω,1/6W
R84	QRD161J-821	RESISTOR	820Ω,1/6W
R85	QRD161J-181	RESISTOR	180Ω,1/6W
R86	QRD161J-181	RESISTOR	180Ω,1/6W
R87	QVZ3521-681	V RESISTOR	680Ω
R88	QVZ3521-681	V RESISTOR	680Ω
R89	QRD161J-102	RESISTOR	1kΩ,1/6W
R90	QRD161J-102	RESISTOR	1kΩ,1/6W
R91	QRD161J-561	RESISTOR	560Ω,1/6W
R92	QRD161J-561	RESISTOR	560Ω,1/6W
R93	QRD161J-471	RESISTOR	470Ω,1/6W
R94	QRD161J-471	RESISTOR	470Ω,1/6W
R95	QRD161J-682	RESISTOR	6.8kΩ,1/6W
R96	QRD161J-682	RESISTOR	6.8kΩ,1/6W
R97	QRD161J-153	RESISTOR	15kΩ,1/6W
R98	QRD161J-153	RESISTOR	15kΩ,1/6W
R99	QRD161J-103	RESISTOR	10kΩ,1/6W
R101	QRD161J-104	RESISTOR	100kΩ,1/6W
R102	QRD161J-104	RESISTOR	100kΩ,1/6W
R103	QRD161J-102	RESISTOR	1kΩ,1/6W
R104	QRD161J-102	RESISTOR	1kΩ,1/6W
R105	QRD161J-472	RESISTOR	4.7kΩ,1/6W
R106	QRD161J-472	RESISTOR	4.7kΩ,1/6W
R107	QRD161J-683	RESISTOR	68kΩ,1/6W
R108	QRD161J-102	RESISTOR	1kΩ,1/6W
C1	QETC1CM-107ZE	E CAPACITOR	100μF,16V
C2	QETC1CM-107ZE	E CAPACITOR	100μF,16V
C3	QETC1CM-107ZE	E CAPACITOR	100μF,16V
C4	QETC1CM-107ZE	E CAPACITOR	100μF,16V
C5	QETC1CM-107ZE	E CAPACITOR	100μF,16V
C6	QETC1CM-107ZE	E CAPACITOR	100μF,16V
C7	QETC1CM-107ZE	E CAPACITOR	100μF,16V
C8	QETC1CM-107ZE	E CAPACITOR	100μF,16V
C9	QETC1EM-475ZE	E CAPACITOR	4.7μF,25V
C10	QETC1EM-475ZE	E CAPACITOR	4.7μF,25V
C11	QETC1EM-475ZE	E CAPACITOR	4.7μF,25V
C12	QETC1EM-475ZE	E CAPACITOR	4.7μF,25V
C13	QETC1EM-475ZE	E CAPACITOR	4.7μF,25V
C14	QETC1EM-475ZE	E CAPACITOR	4.7μF,25V

#⚠REF No.	PART No.	PART NAME,	DESCRIPTION
C15	QETC1EM-475ZE	E CAPACITOR	4.7μF,25V
C16	QETC1EM-475ZE	E CAPACITOR	4.7μF,25V
C17	QETC1CM-226ZE	E CAPACITOR	22μF,16V
C18	QETC1CM-226ZE	E CAPACITOR	22μF,16V
C19	QETC1CM-226ZE	E CAPACITOR	22μF,16V
C20	QETC1CM-226ZE	E CAPACITOR	22μF,16V
C21	QETC1CM-107ZE	E CAPACITOR	100μF,16V
C22	QETC1CM-107ZE	E CAPACITOR	100μF,16V
C23	QETC1CM-107ZE	E CAPACITOR	100μF,16V
C24	QETC1CM-107ZE	E CAPACITOR	100μF,16V
C25	QETC1CM-107ZE	E CAPACITOR	100μF,16V
C26	QETC1CM-107ZE	E CAPACITOR	100μF,16V
C27	QETC1CM-107ZE	E CAPACITOR	100μF,16V
C28	QETC1CM-107ZE	E CAPACITOR	100μF,16V
C29	QETC1EM-475ZE	E CAPACITOR	4.7μF,25V
C30	QETC1EM-475ZE	E CAPACITOR	4.7μF,25V
C31	QETC1EM-475ZE	E CAPACITOR	4.7μF,25V
C32	QETC1EM-475ZE	E CAPACITOR	4.7μF,25V
C33	QETC1EM-475ZE	E CAPACITOR	4.7μF,25V
C34	QETC1EM-475ZE	E CAPACITOR	4.7μF,25V
C35	QETC1EM-475ZE	E CAPACITOR	4.7μF,25V
C36	QETC1EM-475ZE	E CAPACITOR	4.7μF,25V
C37	QENC1CM-106	NP E CAPACITOR	10μF,16V
C38	QENC1CM-106	NP E CAPACITOR	10μF,16V
C39	QENC1CM-106	NP E CAPACITOR	10μF,16V
C40	QETC1CM-226ZE	E CAPACITOR	22μF,16V
C41	QETC1CM-107ZE	E CAPACITOR	100μF,16V
C42	QETC1CM-107ZE	E CAPACITOR	100μF,16V
C43	QETC1CM-107ZE	E CAPACITOR	100μF,16V
C44	QETC1CM-107ZE	E CAPACITOR	100μF,16V
C45	QETC1EM-475ZE	E CAPACITOR	4.7μF,25V
C46	QETC1EM-475ZE	E CAPACITOR	4.7μF,25V
C47	QETC1EM-475ZE	E CAPACITOR	4.7μF,25V
C48	QETC1EM-475ZE	E CAPACITOR	4.7μF,25V
C49	QETC1CM-226ZE	E CAPACITOR	22μF,16V
C50	QETC1CM-226ZE	E CAPACITOR	22μF,16V
C51	QETC1CM-107ZE	E CAPACITOR	100μF,16V
C53	QETC1CM-226ZE	E CAPACITOR	22μF,16V
C54	QETC1CM-226ZE	E CAPACITOR	22μF,16V
C55	QETC1EM-475ZE	E CAPACITOR	4.7μF,25V
C56	QETC1EM-475ZE	E CAPACITOR	4.7μF,25V
C57	QETC1CM-226ZE	E CAPACITOR	22μF,16V
C58	QETC1CM-226ZE	E CAPACITOR	22μF,16V
C59	QETC1CM-476ZE	E CAPACITOR	47μF,16V
C60	QETC1CM-337ZE	E CAPACITOR	330μF,16V
C61	QETC1EM-476ZE	E CAPACITOR	47μF,25V
C62	QCF31HP-103	CAPACITOR	0.01μF,50V
C63	QCF31HP-103	CAPACITOR	0.01μF,50V
C64	QETC1CM-107ZE	E CAPACITOR	100μF,16V
C65	QCF31HP-103	CAPACITOR	0.01μF,50V
C66	QETC1CM-476ZE	E CAPACITOR	47μF,16V
C67	QETC1CM-476ZE	E CAPACITOR	47μF,16V
C68	QCF31HP-103	CAPACITOR	0.01μF,50V
C69	QETC1CM-226ZE	E CAPACITOR	22μF,16V
C70	QETC1CM-226ZE	E CAPACITOR	22μF,16V
C71	QCS31HJ-220	CAPACITOR	22pF,50V
C72	QCS31HJ-100	CAPACITOR	10pF,50V
C73	QCS31HJ-4R0	CAPACITOR	4pF,50V
C74	QCS31HJ-4R0	CAPACITOR	4pF,50V
EJ1	PGZ00582	EJECTOR, ×2	
CN1	PGZ00421-64	MALE CONNECTOR	

AUDIO 3 BOARD ASSEMBLY<23>

#⚠	REF No.	PART No.	PART NAME, DESCRIPTION	
	PWBA	PRK10062A-02	AUDIO 3 BOARD ASSY	
	STK1	PRD30072-58	STICKER	
	IC1	AN6298NS	IC	
	IC2	AN6298NS	IC	
	IC3	AN3922NS	IC	
	IC4	AN3922NS	IC	
	IC6	JCP0020	IC	
	IC7	AN3931NC-A	IC	
	IC8	NJM2068MD	IC	
	IC10	NJM2068MD	IC	
	IC11	NJM2068MD	IC	
	IC12	NJM2068MD	IC	
	IC13	M5278D12	IC	
	IC14	M5278D05	IC	
	IC15	M5278L05	IC	
	IC16	DT5C124E	TRANSISTOR	
	IC17	M5278L05	IC	
	IC18	M5278D09	IC	
	IC20	AN6041	IC	
	IC21	AN607P	IC	
	IC22	AN607P	IC	
	Q2	DTA124EK	TRANSISTOR	
	Q3	DTC124TK	TRANSISTOR	
	Q4	2SB1030R,S	TRANSISTOR	
	Q5	2SB1030R,S	TRANSISTOR	
	Q6	2SB1030R,S	TRANSISTOR	
	Q9	DTC124TK	TRANSISTOR	
	Q10	2SB1030R,S	TRANSISTOR	
	Q11	DTA124ES	TRANSISTOR	
	Q12	DTA124ES	TRANSISTOR	
	Q14	2SB1030R,S	TRANSISTOR	
	Q15	DTC144WK	TRANSISTOR	
	Q16	DTC144WK	TRANSISTOR	
	Q17	2SC2412K	TRANSISTOR	
	Q18	2SC2412K	TRANSISTOR	
	Q19	2SC2412K	TRANSISTOR	
	Q20	2SC2412K	TRANSISTOR	
	Q21	2SC2412K	TRANSISTOR	
	Q22	2SA1037K	TRANSISTOR	
	Q23	DTA124EK	TRANSISTOR	
	Q24	DTC323TK	TRANSISTOR	
	Q25	2SC2412K(S)	TRANSISTOR	
	Q26	2SB793AR	TRANSISTOR	
	Q27	2SD973AR	TRANSISTOR	
	Q28	2SA1037K	TRANSISTOR	
	Q33	2SA1037K	TRANSISTOR	
	Q35	2SA1037K	TRANSISTOR	
	D1	1SS133	DIODE	
	D3	1SS133	DIODE	
	D4	1SS133	DIODE	
	D5	1SS133	DIODE	
	D6	1SS133	DIODE	
	DA1	DAP202K	DIODE	
	R1	QRSA08J-471YN	RESISTOR	470Ω,1/10W
	R2	QRSA08J-471YN	RESISTOR	470Ω,1/10W
	R3	QVZ3513-332	V RESISTOR	3.3kΩ
	R4	QVZ3513-332	V RESISTOR	3.3kΩ
	R5	QRSA08J-122YN	RESISTOR	1.2kΩ,1/10W
	R6	QRSA08J-122YN	RESISTOR	1.2kΩ,1/10W
	R7	NRVA62D-622N	RESISTOR	6.2kΩ,1/16W
	R8	NRVA62D-622N	RESISTOR	6.2kΩ,1/16W
	R9	QRSA08J-681YN	RESISTOR	680Ω,1/10W
	R10	QRSA08J-681YN	RESISTOR	680Ω,1/10W
	R11	NRVA62D-242N	RESISTOR	2.4kΩ,1/16W
	R12	NRVA62D-242N	RESISTOR	2.4kΩ,1/16W
	R13	NRVA62D-183N	RESISTOR	18kΩ,1/16W
	R14	NRVA62D-183N	RESISTOR	18kΩ,1/16W
	R15	NRVA62D-562N	RESISTOR	5.6kΩ,1/16W
	R16	NRVA62D-562N	RESISTOR	5.6kΩ,1/16W
	R17	QRSA08J-223YN	RESISTOR	22kΩ,1/10W
	R18	QRSA08J-223YN	RESISTOR	22kΩ,1/10W
	R19	NRVA62D-163N	RESISTOR	16kΩ,1/16W
	R20	NRVA62D-163N	RESISTOR	16kΩ,1/16W
	R21	NRVA62D-912N	RESISTOR	9.1kΩ,1/16W
	R22	NRVA62D-912N	RESISTOR	9.1kΩ,1/16W
	R25	NRVA62D-332N	RESISTOR	3.3kΩ,1/16W
	R26	NRVA62D-332N	RESISTOR	3.3kΩ,1/16W
	R27	NRVA62D-562N	RESISTOR	5.6kΩ,1/16W
	R28	NRVA62D-562N	RESISTOR	5.6kΩ,1/16W
	R29	NRVA62D-112N	RESISTOR	1.1kΩ,1/16W
	R30	NRVA62D-112N	RESISTOR	1.1kΩ,1/16W
	R31	NRVA62D-103N	RESISTOR	10kΩ,1/16W
	R32	NRVA62D-103N	RESISTOR	10kΩ,1/16W
	R39	QRSA08J-102YN	RESISTOR	1kΩ,1/10W
	R40	QRSA08J-102YN	RESISTOR	1kΩ,1/10W
	R45	QRSA08J-103YN	RESISTOR	10kΩ,1/10W
	R46	QRSA08J-103YN	RESISTOR	10kΩ,1/10W
	R47	QRSA08J-103YN	RESISTOR	10kΩ,1/10W
	R48	QRSA08J-103YN	RESISTOR	10kΩ,1/10W
	R51	QRSA08J-124YN	RESISTOR	120kΩ,1/10W
	R52	QRSA08J-124YN	RESISTOR	120kΩ,1/10W
	R53	QRSA08J-392YN	RESISTOR	3.9kΩ,1/10W
	R54	QRSA08J-392YN	RESISTOR	3.9kΩ,1/10W
	R55	QVZ3513-681	V RESISTOR	680Ω
	R56	QVZ3513-681	V RESISTOR	680Ω
	R60	QRSA08J-124YN	RESISTOR	120kΩ,1/10W
	R61	QRSA08J-392YN	RESISTOR	3.9kΩ,1/10W
	R62	QRSA08J-272YN	RESISTOR	2.7kΩ,1/10W
	R63	QVZ3513-332	V RESISTOR	3.3kΩ
	R64	QVZ3513-222	V RESISTOR	2.2kΩ
	R65	QRSA08J-103YN	RESISTOR	10kΩ,1/10W
	R66	QRSA08J-103YN	RESISTOR	10kΩ,1/10W
	R67	QRSA08J-103YN	RESISTOR	10kΩ,1/10W
	R68	QRSA08J-103YN	RESISTOR	10kΩ,1/10W
	R69	QRSA08J-224YN	RESISTOR	220kΩ,1/10W
	R70	QRSA08J-224YN	RESISTOR	220kΩ,1/10W
	R71	QRSA08J-472YN	RESISTOR	4.7kΩ,1/10W
	R72	QRSA08J-472YN	RESISTOR	4.7kΩ,1/10W
	R73	QRSA08J-472YN	RESISTOR	4.7kΩ,1/10W
	R74	QRSA08J-472YN	RESISTOR	4.7kΩ,1/10W
	R75	QRSA08J-223YN	RESISTOR	22kΩ,1/10W
	R76	QRSA08J-223YN	RESISTOR	22kΩ,1/10W
	R77	QRSA08J-472YN	RESISTOR	4.7kΩ,1/10W
	R78	QRSA08J-472YN	RESISTOR	4.7kΩ,1/10W
	R79	QRSA08J-472YN	RESISTOR	4.7kΩ,1/10W
	R80	QRSA08J-472YN	RESISTOR	4.7kΩ,1/10W
	R81	QRSA08J-153YN	RESISTOR	15kΩ,1/10W
	R82	QRSA08J-153YN	RESISTOR	15kΩ,1/10W
	R83	QRSA08J-223YN	RESISTOR	22kΩ,1/10W
	R84	QRSA08J-223YN	RESISTOR	22kΩ,1/10W

<23>

#⚠	REF No.	PART No.	PART NAME, DESCRIPTION	
	R95	QRSA08J-223YN	RESISTOR	22kΩ,1/10W
	R96	QRSA08J-223YN	RESISTOR	22kΩ,1/10W
	R97	QRSA08J-472YN	RESISTOR	4.7kΩ,1/10W
	R98	QRSA08J-472YN	RESISTOR	4.7kΩ,1/10W
	R99	QRSA08J-472YN	RESISTOR	4.7kΩ,1/10W
	R100	QRSA08J-472YN	RESISTOR	4.7kΩ,1/10W
	R101	QRSA08J-472YN	RESISTOR	4.7kΩ,1/10W
	R102	QRSA08J-472YN	RESISTOR	4.7kΩ,1/10W
	R103	QRSA08J-223YN	RESISTOR	22kΩ,1/10W
	R104	QRSA08J-223YN	RESISTOR	22kΩ,1/10W
	R105	QRSA08J-473YN	RESISTOR	47kΩ,1/10W
	R106	QRSA08J-473YN	RESISTOR	47kΩ,1/10W
	R107	QRSA08J-472YN	RESISTOR	4.7kΩ,1/10W
	R108	QRSA08J-472YN	RESISTOR	4.7kΩ,1/10W
	R109	QRSA08J-472YN	RESISTOR	4.7kΩ,1/10W
	R110	QRSA08J-472YN	RESISTOR	4.7kΩ,1/10W
	R111	QRSA08J-153YN	RESISTOR	15kΩ,1/10W
	R112	QRSA08J-153YN	RESISTOR	15kΩ,1/10W
	R113	QRSA08J-473YN	RESISTOR	47kΩ,1/10W
	R114	QRSA08J-473YN	RESISTOR	47kΩ,1/10W
	R115	QRSA08J-153YN	RESISTOR	15kΩ,1/10W
	R116	QRSA08J-273YN	RESISTOR	27kΩ,1/10W
	R117	QRSA08J-104YN	RESISTOR	100kΩ,1/10W
	R118	QRSA08J-104YN	RESISTOR	100kΩ,1/10W
	R123	QRSA08J-153YN	RESISTOR	15kΩ,1/10W
	R124	QRSA08J-153YN	RESISTOR	15kΩ,1/10W
	R125	QRSA08J-562YN	RESISTOR	5.6kΩ,1/10W
	R126	QRSA08J-562YN	RESISTOR	5.6kΩ,1/10W
	R127	QRSA08J-392YN	RESISTOR	3.9kΩ,1/10W
	R128	QRSA08J-392YN	RESISTOR	3.9kΩ,1/10W
	R129	QRSA08J-472YN	RESISTOR	4.7kΩ,1/10W
	R130	QRSA08J-822YN	RESISTOR	8.2kΩ,1/10W
	R131	QRSA08J-222YN	RESISTOR	2.2kΩ,1/10W
	R132	QRSA08J-153YN	RESISTOR	15kΩ,1/10W
	R133	QRSA08J-223YN	RESISTOR	22kΩ,1/10W
	R134	QRSA08J-202YN	RESISTOR	2kΩ,1/10W
	R135	QRSA08J-103YN	RESISTOR	10kΩ,1/10W
	R136	QRSA08J-124YN	RESISTOR	120kΩ,1/10W
	R137	QRSA08J-823YN	RESISTOR	82kΩ,1/10W
	R138	QRSA08J-273YN	RESISTOR	27kΩ,1/10W
	R139	QRSA08J-823YN	RESISTOR	82kΩ,1/10W
	R140	QRSA08J-222YN	RESISTOR	2.2kΩ,1/10W
	R141	QRSA08J-271YN	RESISTOR	270Ω,1/10W
	R142	QRSA08J-472YN	RESISTOR	4.7kΩ,1/10W
	R143	QRSA08J-103YN	RESISTOR	10kΩ,1/10W
	R144	QRSA08J-103YN	RESISTOR	10kΩ,1/10W
	R146	QRSA08J-124YN	RESISTOR	120kΩ,1/10W
	R147	QRSA08J-103YN	RESISTOR	10kΩ,1/10W
	R148	QRSA08J-472YN	RESISTOR	4.7kΩ,1/10W
	R149	QRSA08J-273YN	RESISTOR	27kΩ,1/10W
	R150	QRSA08J-273YN	RESISTOR	27kΩ,1/10W
	R151	QRSA08J-273YN	RESISTOR	27kΩ,1/10W
	R152	QRSA08J-273YN	RESISTOR	27kΩ,1/10W
	R153	QRSA08J-102YN	RESISTOR	1kΩ,1/10W
	R154	QRSA08J-102YN	RESISTOR	1kΩ,1/10W
	R155	QRSA08J-102YN	RESISTOR	1kΩ,1/10W
	R156	QRSA08J-102YN	RESISTOR	1kΩ,1/10W
	R157	QRSA08J-0R0Y	RESISTOR	0Ω,1/10W
	R158	QRSA08J-0R0Y	RESISTOR	0Ω,1/10W
	R159	QVZ3513-102	V RESISTOR	1kΩ
	R160	QVZ3513-102	V RESISTOR	1kΩ
	R161	QRSA08J-273YN	RESISTOR	27kΩ,1/10W
	R162	QRSA08J-273YN	RESISTOR	27kΩ,1/10W
	R163	QRSA08J-273YN	RESISTOR	27kΩ,1/10W
	R164	QRSA08J-273YN	RESISTOR	27kΩ,1/10W
	R165	QRSA08J-102YN	RESISTOR	1kΩ,1/10W

#⚠	REF No.	PART No.	PART NAME, DESCRIPTION	
	R166	QRSA08J-102YN	RESISTOR	1kΩ,1/10W
	R167	QRSA08J-332YN	RESISTOR	3.3kΩ,1/10W
	R168	QRSA08J-152YN	RESISTOR	1.5kΩ,1/10W
	R169	QRSA08J-332YN	RESISTOR	3.3kΩ,1/10W
	R170	QRSA08J-273YN	RESISTOR	27kΩ,1/10W
	R171	QRSA08J-273YN	RESISTOR	27kΩ,1/10W
	R172	QRSA08J-152YN	RESISTOR	1.5kΩ,1/10W
	R173	QRSA08J-332YN	RESISTOR	3.3kΩ,1/10W
	R174	QRSA08J-332YN	RESISTOR	3.3kΩ,1/10W
	R175	QRSA08J-152YN	RESISTOR	1.5kΩ,1/10W
	R176	QRSA08J-100YN	RESISTOR	10Ω,1/10W
	R177	QRSA08J-100YN	RESISTOR	10Ω,1/10W
	R181	QRSA08J-153YN	RESISTOR	15kΩ,1/10W
	R183	QRSA08J-473YN	RESISTOR	47kΩ,1/10W
	R184	QRSA08J-472YN	RESISTOR	4.7kΩ,1/10W
	R186	QRSA08J-103YN	RESISTOR	10kΩ,1/10W
	R187	QRSA08J-103YN	RESISTOR	10kΩ,1/10W
	R188	QRSA08J-473YN	RESISTOR	47kΩ,1/10W
	R189	QRSA08J-472YN	RESISTOR	4.7kΩ,1/10W
	R192	QRSA08J-333YN	RESISTOR	33kΩ,1/10W
	R193	QRSA08J-123YN	RESISTOR	12kΩ,1/10W
	R194	QRSA08J-102YN	RESISTOR	1kΩ,1/10W
	R195	QRSA08J-911YN	RESISTOR	910Ω,1/10W
	R196	QRSA08J-561YN	RESISTOR	560Ω,1/10W
	R197	QRSA08J-102YN	RESISTOR	1kΩ,1/10W
	R199	QRSA08J-152YN	RESISTOR	1.5kΩ,1/10W
	R200	QRSA08J-152YN	RESISTOR	1.5kΩ,1/10W
	R201	QRSA08J-273YN	RESISTOR	27kΩ,1/10W
	R202	QRSA08J-273YN	RESISTOR	27kΩ,1/10W
⚠	R208	PU52108-2R2K	POSITIVE THERMISTOR	
	R211	QRSA08J-472YN	RESISTOR	4.7kΩ,1/10W
	R212	QRSA08J-472YN	RESISTOR	4.7kΩ,1/10W
	R215	QRSA08J-332YN	RESISTOR	3.3kΩ,1/10W
	R216	QRSA08J-332YN	RESISTOR	3.3kΩ,1/10W
	R217	QRSA08J-102YN	RESISTOR	1kΩ,1/10W
	R218	QRSA08J-102YN	RESISTOR	1kΩ,1/10W
	R219	QRD161J-183	RESISTOR	18kΩ,1/6W
	R220	QRD161J-183	RESISTOR	18kΩ,1/6W
	C1	QENC1AM-226	E CAPACITOR	22μF,10V
	C2	QENC1AM-226	E CAPACITOR	22μF,10V
	C3	QFN31HJ-102	M CAPACITOR	0.001μF,50V
	C4	QFN31HJ-102	M CAPACITOR	0.001μF,50V
	C5	QFN31HJ-222	M CAPACITOR	0.0022μF,50V
	C6	QFN31HJ-222	M CAPACITOR	0.0022μF,50V
	C7	QFN31HJ-102	M CAPACITOR	0.001μF,50V
	C8	QFN31HJ-102	M CAPACITOR	0.001μF,50V
	C9	QFN31HJ-103	M CAPACITOR	0.01μF,50V
	C10	QFN31HJ-103	M CAPACITOR	0.01μF,50V
	C11	QFP32AF-103M	PP CAPACITOR	0.01μF,100V
	C12	QFP32AF-103M	PP CAPACITOR	0.01μF,100V
	C13	QENC1CM-106	NP E CAPACITOR	10μF,16V
	C14	QENC1CM-106	NP E CAPACITOR	10μF,16V
	C15	QENC1CM-476	NP E CAPACITOR	47μF,16V
	C16	QENC1CM-476	NP E CAPACITOR	47μF,16V
	C17	QEBA1EM-475	E CAPACITOR	4.7μF,25V
	C18	QEBA1EM-475	E CAPACITOR	4.7μF,25V
	C19	QFP32AF-222M	PP CAPACITOR	0.0022μF,100V
	C20	QFP32AF-222M	PP CAPACITOR	0.0022μF,100V
	C23	QFN31HJ-102	M CAPACITOR	0.001μF,50V
	C24	QFN31HJ-102	M CAPACITOR	0.001μF,50V
	C25	QFN31HJ-222	M CAPACITOR	0.0022μF,50V
	C26	QFN31HJ-222	M CAPACITOR	0.0022μF,50V
	C27	QENC1EM-475	NP E CAPACITOR	4.7μF,25V
	C28	QENC1EM-475	NP E CAPACITOR	4.7μF,25V
	C29	QFP32AF-223M	PP CAPACITOR	0.022μF,100V

#⚠REF No.	PART No.	PART NAME,	DESCRIPTION
C30	QFP32AF-223M	PP CAPACITOR	0.022μF,100V
C31	QETC1CM-476E	E CAPACITOR	47μF,16V
C32	QETC1CM-476E	E CAPACITOR	47μF,16V
C33	QETC1CM-476E	E CAPACITOR	47μF,16V
C34	QETC1CM-476E	E CAPACITOR	47μF,16V
C35	QENC1HM-225	NP E CAPACITOR	2.2μF,50V
C36	QENC1HM-225	NP E CAPACITOR	2.2μF,50V
C37	QETC1CM-476E	E CAPACITOR	47μF,16V
C38	QETC1CM-476E	E CAPACITOR	47μF,16V
C39	QCYA1HK-103	CAPACITOR	0.01μF,50V
C40	QCYA1HK-103	CAPACITOR	0.01μF,50V
C41	QETC1CM-226E	E CAPACITOR	22μF,16V
C42	QETC1CM-226E	E CAPACITOR	22μF,16V
C49	QETC1HM-105ZE	E CAPACITOR	1μF,50V
C50	QETC1HM-105ZE	E CAPACITOR	1μF,50V
C53	QETC0JM-476ZE	E CAPACITOR	47μF,6.3V
C54	QETC0JM-476ZE	E CAPACITOR	47μF,6.3V
C59	QETC1CM-226E	E CAPACITOR	22μF,16V
C60	QETC1CM-226ZE	E CAPACITOR	22μF,16V
C61	QCYA1HK-102	CAPACITOR	0.001μF,50V
C62	QCYA1HK-102	CAPACITOR	0.001μF,50V
C63	QETC0JM-107ZE	E CAPACITOR	100μF,6.3V
C64	QETC0JM-107ZE	E CAPACITOR	100μF,6.3V
C65	QCYA1HK-103	CAPACITOR	0.01μF,50V
C66	QCYA1HK-103	CAPACITOR	0.01μF,50V
C67	QCTA1CH-101	CAPACITOR	100pF,16V
C68	QCTA1CH-101	CAPACITOR	100pF,16V
C69	QFN31HJ-103	M CAPACITOR	0.01μF,50V
C70	QFN31HJ-103	M CAPACITOR	0.01μF,50V
C71	QENA1AM-226	NP E CAPACITOR	22μF,10V
C72	QENA1AM-226	NP E CAPACITOR	22μF,10V
C73	QCTA1CH-820	CAPACITOR	82pF,16V
C74	QCTA1CH-820	CAPACITOR	82pF,16V
C75	QFN31HJ-103	M CAPACITOR	0.01μF,50V
C76	QFN31HJ-103	M CAPACITOR	0.01μF,50V
C77	QENA1CM-226	NP E CAPACITOR	22μF,16V
C78	QENA1CM-226	NP E CAPACITOR	22μF,16V
C79	QCTA1CH-820	CAPACITOR	82pF,16V
C80	QCTA1CH-820	CAPACITOR	82pF,16V
C81	QCTA1CH-820	CAPACITOR	82pF,16V
C82	QCTA1CH-820	CAPACITOR	82pF,16V
C83	QCTA1CH-820	CAPACITOR	82pF,16V
C84	QCTA1CH-820	CAPACITOR	82pF,16V
C85	QETC1CM-107E	E CAPACITOR	100μF,16V
C86	QETC1CM-107E	E CAPACITOR	100μF,16V
C89	QETC1CM-107E	E CAPACITOR	100μF,16V
C90	QETC1CM-107ZE	E CAPACITOR	100μF,16V
C91	QETC1CM-106E	E CAPACITOR	10μF,16V
C92	QETC1CM-106ZE	E CAPACITOR	10μF,16V
C93	QCTA1CH-8R0	CAPACITOR	8pF,16V
C94	QCTA1CH-8R0	CAPACITOR	8pF,16V
C95	QETC1CM-476ZE	E CAPACITOR	47μF,16V
C96	QETC1CM-476ZE	E CAPACITOR	47μF,16V
C97	QCYA1HK-103	CAPACITOR	0.01μF,50V
C98	QCYA1HK-103	CAPACITOR	0.01μF,50V
C109	QENC1CM-106	NP E CAPACITOR	10μF,16V
C110	QENC1CM-106	NP E CAPACITOR	10μF,16V
C111	QETC1CM-107ZE	E CAPACITOR	100μF,16V
C112	QETC1CM-107E	E CAPACITOR	100μF,16V
C113	QETC1CM-336E	E CAPACITOR	33μF,16V
C114	QETC1CM-336ZE	E CAPACITOR	33μF,16V
C115	QCTA1CH-100	CAPACITOR	10pF,16V
C116	QCTA1CH-100	CAPACITOR	10pF,16V
C117	QETC1CM-476E	E CAPACITOR	47μF,16V
C118	QCYA1HK-103	CAPACITOR	0.01μF,50V

#⚠REF No.	PART No.	PART NAME,	DESCRIPTION
C119	QETC1CM-226E	E CAPACITOR	22μF,16V
C120	QETC1CM-226E	E CAPACITOR	22μF,16V
C121	QENC1CM-106	NP E CAPACITOR	10μF,16V
C122	QENC1CM-106	NP E CAPACITOR	10μF,16V
C123	QETC1CM-107ZE	E CAPACITOR	100μF,16V
C124	QETC1CM-107E	E CAPACITOR	100μF,16V
C125	QETC1CM-226E	E CAPACITOR	22μF,16V
C126	QETC1CM-226ZE	E CAPACITOR	22μF,16V
C127	QCTA1CH-100	CAPACITOR	10pF,16V
C128	QCTA1CH-100	CAPACITOR	10pF,16V
C129	QETC1CM-336E	E CAPACITOR	33μF,16V
C130	QETC1CM-336E	E CAPACITOR	33μF,16V
C131	QETC1CM-476ZE	E CAPACITOR	47μF,16V
C132	QCYA1HK-103	CAPACITOR	0.01μF,50V
C138	QCYA1HK-103	CAPACITOR	0.01μF,50V
C139	QENC1HM-105	NP E CAPACITOR	1μF,50V
C140	QENC1HM-105	NP E CAPACITOR	1μF,50V
C141	QCTA1CH-331	CAPACITOR	330pF,16V
C142	QCTA1CH-331	CAPACITOR	330pF,16V
C143	QFN31HJ-102	M CAPACITOR	0.001μF,50V
C144	QFN31HJ-102	M CAPACITOR	0.001μF,50V
C145	QENA1AM-476	E CAPACITOR	47μF,10V
C146	QENA1AM-476	E CAPACITOR	47μF,10V
C147	QENC1CM-106	NP E CAPACITOR	10μF,16V
C148	QENC1CM-106	NP E CAPACITOR	10μF,16V
C149	QCTA1CH-560	CAPACITOR	56pF,16V
C150	QETC0JM-227E	E CAPACITOR	220μF,6.3V
C151	QETC1CM-106E	E CAPACITOR	10μF,16V
C152	QETC1CM-106E	E CAPACITOR	10μF,16V
C153	QENC1CM-106	NP E CAPACITOR	10μF,16V
C154	QENC1CM-106	NP E CAPACITOR	10μF,16V
C155	QFN31HJ-392	M CAPACITOR	0.0039μF,50V
C156	QFN31HJ-392	M CAPACITOR	0.0039μF,50V
C157	QETC1AM-226ZE	E CAPACITOR	22μF,10V
C158	QETC1AM-226E	E CAPACITOR	22μF,10V
C159	QFN31HJ-222	M CAPACITOR	0.0022μF,50V
C160	QFN31HJ-222	M CAPACITOR	0.0022μF,50V
C161	QFV71HJ-104	TF CAPACITOR	0.1μF,50V
C162	QFV71HJ-104	TF CAPACITOR	0.1μF,50V
C163	QFN31HJ-822	M CAPACITOR	0.0082μF,50V
C164	QFN31HJ-822	M CAPACITOR	0.0082μF,50V
C165	QCTA1CH-471	CAPACITOR	470pF,16V
C166	QCTA1CH-471	CAPACITOR	470pF,16V
C167	QETC0JM-227E	E CAPACITOR	220μF,6.3V
C168	QFN31HJ-471	M CAPACITOR	470pF,50V
C169	QFN31HJ-103	M CAPACITOR	0.01μF,50V
C170	QETC0JM-107E	E CAPACITOR	100μF,6.3V
C171	QFN31HJ-473	M CAPACITOR	0.047μF,50V
C172	QCTA1CH-561	CAPACITOR	560pF,16V
C174	QETC1HM-225E	E CAPACITOR	2.2μF,50V
C175	QCYA1HK-103	CAPACITOR	0.01μF,50V
C176	QETA1EM-337E	E CAPACITOR	330μF,25V
C177	QETC1CM-337ZE	E CAPACITOR	330μF,16V
C178	QCYA1HK-103	CAPACITOR	0.01μF,50V
C179	QETC1CM-227ZE	E CAPACITOR	220μF,16V
C180	QCYA1HK-103	CAPACITOR	0.01μF,50V
C181	QCYA1HK-103	CAPACITOR	0.01μF,50V
C182	QETC1CM-107ZE	E CAPACITOR	100μF,16V
C183	QETC1CM-476ZE	E CAPACITOR	47μF,16V
C184	QCYA1HK-103	CAPACITOR	0.01μF,50V
C185	QCYA1HK-103	CAPACITOR	0.01μF,50V
C186	QCYA1HK-103	CAPACITOR	0.01μF,50V
C187	QCYA1HK-103	CAPACITOR	0.01μF,50V
C188	QCYA1HK-103	CAPACITOR	0.01μF,50V
C189	QCYA1HK-103	CAPACITOR	0.01μF,50V
C190	QCYA1HK-103	CAPACITOR	0.01μF,50V

<23><24>

#⚠REF No.	PART No.	PART NAME,	DESCRIPTION
C191	QCTA1CH-151	CAPACITOR	150pF,16V
C192	QCTA1CH-121	CAPACITOR	120pF,16V
C193	QCTA1CH-151	CAPACITOR	150pF,16V
C194	QCTA1CH-121	CAPACITOR	120pF,16V
C195	QCYA1HK-103	CAPACITOR	0.01μF,50V
C196	QCYA1HK-103	CAPACITOR	0.01μF,50V
C197	QCYA1HK-103	CAPACITOR	0.01μF,50V
C198	QCYA1HK-103	CAPACITOR	0.01μF,50V
C199	QETC1CM-476ZE	E CAPACITOR	47μF,16V
C200	QETC1CM-476ZE	E CAPACITOR	47μF,16V
C201	QCYA1HK-103	CAPACITOR	0.01μF,50V
C202	QCYA1HK-103	CAPACITOR	0.01μF,50V
C203	QCYA1HK-222	CAPACITOR	0.0022μF,50V
C204	QCYA1HK-222	CAPACITOR	0.0022μF,50V
C205	QCYA1HK-222	CAPACITOR	0.0022μF,50V
C206	QCYA1HK-222	CAPACITOR	0.0022μF,50V
C207	QETC1CM-476ZE	E CAPACITOR	47μF,16V
C208	QETC1CM-476ZE	E CAPACITOR	47μF,16V
C209	QCYA1HK-103	CAPACITOR	0.01μF,50V
C211	QCYA1HK-223	CAPACITOR	0.022μF,50V
C212	QCTA1CH-220	CAPACITOR	22pF,16V
C213	QCYA1HK-103	CAPACITOR	0.01μF,50V
C215	QCYA1HK-103	CAPACITOR	0.01μF,50V
C216	QCYA1HK-103	CAPACITOR	0.01μF,50V
C217	QCYA1HK-103	CAPACITOR	0.01μF,50V
C219	QFV71HJ-104	TF CAPACITOR	0.1μF,50V
C220	QETC1CM-476ZE	E CAPACITOR	47μF,16V
C221	QCYA1HK-103	CAPACITOR	0.01μF,50V
C222	QCYA1HK-103	CAPACITOR	0.01μF,50V
C223	QEE81EM-105	TANTAL CAPACITOR	1μF,25V
C224	QETC1CM-107ZE	E CAPACITOR	100μF,16V
C225	QCYA1HK-103	CAPACITOR	0.01μF,50V
C226	QCYA1HK-103	CAPACITOR	0.01μF,50V
C227	QETC1CM-476ZE	E CAPACITOR	47μF,16V
C228	QETC1CM-106ZE	E CAPACITOR	10μF,16V
C229	QFN31HJ-682	M CAPACITOR	0.0068μF,50V
C230	QETC1CM-476ZE	E CAPACITOR	47μF,16V
C231	QCYA1HK-103	CAPACITOR	0.01μF,50V
C233	QETC1CM-476ZE	E CAPACITOR	47μF,16V
C234	QCYA1HK-103	CAPACITOR	0.01μF,50V
L3	PU30284-1R	COIL	1. μH
L4	PU30284-1R	COIL	1. μH
L5	PU48530-271J	COIL	270μH
L6	PU48530-271J	COIL	270μH
L9	PU48530-271J	COIL	270μH
L10	PU48530-271J	COIL	270μH
L11	PU48530-271J	COIL	270μH
L12	PU48530-271J	COIL	270μH
L13	PU48530-101J	COIL	100μH
L14	PU48530-820J	COIL	82μH
EJ1	PGZ00582	EJECTOR, ×2	
TP1	PU54983	TEST PIN, ×10	
CN1	PGZ00421-64	MALE CONNECTOR	

AUDIO 4 BOARD ASSEMBLY<24>

#⚠REF No.	PART No.	PART NAME,	DESCRIPTION
PWBA	PRK10063A1-03	AUDIO 4 BOARD ASSY	

#⚠REF No.	PART No.	PART NAME,	DESCRIPTION
IC1	NJM2068MD	IC	
IC2	NJM2068MD	IC	
IC3	NJM2068MD	IC	
IC4	NJM2068MD	IC	
IC5	NJM2068MD	IC	
IC6	NJM2068MD	IC	
D2	RD5.1ES-T1B2	ZENER DIODE	
D3	RD5.1ES-T1B2	ZENER DIODE	
D4	RD5.1ES-T1B2	ZENER DIODE	
D5	RD5.1ES-T1B2	ZENER DIODE	
R1	QRSA08J-122YN	RESISTOR	1.2kΩ,1／10W
R2	QRSA08J-122YN	RESISTOR	1.2kΩ,1／10W
R3	QRSA08J-122YN	RESISTOR	1.2kΩ,1／10W
R4	QRSA08J-122YN	RESISTOR	1.2kΩ,1／10W
R5	QRSA08J-132YN	RESISTOR	1.3kΩ,1／10W
R6	QRSA08J-132YN	RESISTOR	1.3kΩ,1／10W
R7	QRSA08J-132YN	RESISTOR	1.3kΩ,1／10W
R8	QRSA08J-132YN	RESISTOR	1.3kΩ,1／10W
R9	NRVA02D-8251AY	RESISTOR	8.25kΩ,1／10W
R10	NRVA02D-8251AY	RESISTOR	8.25kΩ,1／10W
R11	NRVA02D-8251AY	RESISTOR	8.25kΩ,1／10W
R12	NRVA02D-8251AY	RESISTOR	8.25kΩ,1／10W
R13	NRVA02D-8251AY	RESISTOR	8.25kΩ,1／10W
R14	NRVA02D-8251AY	RESISTOR	8.25kΩ,1／10W
R15	NRVA02D-8251AY	RESISTOR	8.25kΩ,1／10W
R16	NRVA02D-8251AY	RESISTOR	8.25kΩ,1／10W
R17	NRVA62D-152N	RESISTOR	1.5kΩ,1／16W
R18	NRVA62D-152N	RESISTOR	1.5kΩ,1／16W
R19	NRVA62D-152N	RESISTOR	1.5kΩ,1／16W
R20	NRVA62D-152N	RESISTOR	1.5kΩ,1／16W
R21	NRVA02D-3161AY	RESISTOR	3.16kΩ,1／10W
R22	NRVA02D-3161AY	RESISTOR	3.16kΩ,1／10W
R23	NRVA02D-3161AY	RESISTOR	3.16kΩ,1／10W
R24	NRVA02D-3161AY	RESISTOR	3.16kΩ,1／10W
R25	NRVA02D-8452AY	RESISTOR	84.5kΩ,1／10W
R26	NRVA02D-8452AY	RESISTOR	84.5kΩ,1／10W
R27	NRVA02D-8452AY	RESISTOR	84.5kΩ,1／10W
R28	NRVA02D-8452AY	RESISTOR	84.5kΩ,1／10W
R29	NRVA02D-2211AY	RESISTOR	2.21kΩ,1／10W
R30	NRVA02D-2211AY	RESISTOR	2.21kΩ,1／10W
R31	NRVA02D-2211AY	RESISTOR	2.21kΩ,1／10W
R32	NRVA02D-2211AY	RESISTOR	2.21kΩ,1／10W
R33	NRVA02D-2211AY	RESISTOR	2.21kΩ,1／10W
R34	NRVA02D-2211AY	RESISTOR	2.21kΩ,1／10W
R35	NRVA02D-2211AY	RESISTOR	2.21kΩ,1／10W
R36	NRVA02D-2211AY	RESISTOR	2.21kΩ,1／10W
R37	QRSA08J-104YN	RESISTOR	100kΩ,1／10W
R38	QRSA08J-104YN	RESISTOR	100kΩ,1／10W
R39	QRSA08J-104YN	RESISTOR	100kΩ,1／10W
R40	QRSA08J-104YN	RESISTOR	100kΩ,1／10W
R41	QRSA08J-104YN	RESISTOR	100kΩ,1／10W
R42	QRSA08J-104YN	RESISTOR	100kΩ,1／10W
R43	QRSA08J-104YN	RESISTOR	100kΩ,1／10W
R44	QRSA08J-104YN	RESISTOR	100kΩ,1／10W
R45	QRSA08J-472YN	RESISTOR	4.7kΩ,1／10W
R46	QRSA08J-472YN	RESISTOR	4.7kΩ,1／10W
R47	QRSA08J-472YN	RESISTOR	4.7kΩ,1／10W
R48	QRSA08J-472YN	RESISTOR	4.7kΩ,1／10W
R49	QRSA08J-472YN	RESISTOR	4.7kΩ,1／10W
R50	QRSA08J-472YN	RESISTOR	4.7kΩ,1／10W
R51	QRSA08J-472YN	RESISTOR	4.7kΩ,1／10W
R52	QRSA08J-472YN	RESISTOR	4.7kΩ,1／10W
R53	QRSA08J-104YN	RESISTOR	100kΩ,1／10W

#△REF No.	PART No.	PART NAME,	DESCRIPTION
R54	QRSA08J-104YN	RESISTOR	100kΩ,1／10W
R55	QRSA08J-104YN	RESISTOR	100kΩ,1／10W
R56	QRSA08J-104YN	RESISTOR	100kΩ,1／10W
R57	NRVA62D-472N	RESISTOR	4.7kΩ,1／16W
R58	NRVA62D-472N	RESISTOR	4.7kΩ,1／16W
R59	NRVA62D-472N	RESISTOR	4.7kΩ,1／16W
R60	NRVA62D-472N	RESISTOR	4.7kΩ,1／16W
R61	NRVA62D-472N	RESISTOR	4.7kΩ,1／16W
R62	NRVA62D-472N	RESISTOR	4.7kΩ,1／16W
R63	NRVA62D-472N	RESISTOR	4.7kΩ,1／16W
R64	NRVA62D-472N	RESISTOR	4.7kΩ,1／16W
R65	NRVA62D-472N	RESISTOR	4.7kΩ,1／16W
R66	NRVA62D-472N	RESISTOR	4.7kΩ,1／16W
R67	NRVA62D-472N	RESISTOR	4.7kΩ,1／16W
R68	NRVA62D-472N	RESISTOR	4.7kΩ,1／16W
R69	NRVA62D-472N	RESISTOR	4.7kΩ,1／16W
R70	NRVA62D-472N	RESISTOR	4.7kΩ,1／16W
R71	NRVA62D-472N	RESISTOR	4.7kΩ,1／16W
R72	NRVA62D-472N	RESISTOR	4.7kΩ,1／16W
R73	QRD162J-0R0	V RESISTOR	0Ω,1／6W
R74	QRD162J-0R0	V RESISTOR	0Ω,1／6W
R75	QRD162J-0R0	V RESISTOR	0Ω,1／6W
R76	QRD162J-0R0	V RESISTOR	0Ω,1／6W
R77	QRSA08J-105YN	RESISTOR	1MΩ,1／10W
R78	QRSA08J-105YN	RESISTOR	1MΩ,1／10W
R79	QRSA08J-105YN	RESISTOR	1MΩ,1／10W
R80	QRSA08J-105YN	RESISTOR	1MΩ,1／10W
R81	QRSA08J-105YN	RESISTOR	1MΩ,1／10W
R82	QRSA08J-105YN	RESISTOR	1MΩ,1／10W
R83	QRSA08J-105YN	RESISTOR	1MΩ,1／10W
R84	QRSA08J-105YN	RESISTOR	1MΩ,1／10W
R89	NRVA02D-3651AY	RESISTOR	3.65kΩ,1／10W
R90	NRVA02D-3651AY	RESISTOR	3.65kΩ,1／10W
R91	NRVA02D-3651AY	RESISTOR	3.65kΩ,1／10W
R92	NRVA02D-3651AY	RESISTOR	3.65kΩ,1／10W
R93	NRVA02D-7681AY	RESISTOR	7.68kΩ,1／10W
R94	NRVA02D-7681AY	RESISTOR	7.68kΩ,1／10W
R95	NRVA02D-7681AY	RESISTOR	7.68kΩ,1／10W
R96	NRVA02D-7681AY	RESISTOR	7.68kΩ,1／10W
R97	NRVA62D-224N	RESISTOR	220kΩ,1／16W
R98	NRVA62D-224N	RESISTOR	220kΩ,1／16W
R99	NRVA62D-224N	RESISTOR	220kΩ,1／16W
R100	NRVA62D-224N	RESISTOR	220kΩ,1／16W
C1	QEPC1EM-475	NP E CAPACITOR	4.7μF,25V
C2	QEPC1EM-475	NP E CAPACITOR	4.7μF,25V
C3	QEPC1EM-475	NP E CAPACITOR	4.7μF,25V
C4	QEPC1EM-475	NP E CAPACITOR	4.7μF,25V
C5	QEPC1EM-475	NP E CAPACITOR	4.7μF,25V
C6	QEPC1EM-475	NP E CAPACITOR	4.7μF,25V
C7	QEPC1EM-475	NP E CAPACITOR	4.7μF,25V
C8	QEPC1EM-475	NP E CAPACITOR	4.7μF,25V
C9	QCTA1CH-101	CAPACITOR	100pF,16V
C10	QCTA1CH-101	CAPACITOR	100pF,16V
C11	QCTA1CH-101	CAPACITOR	100pF,16V
C12	QCTA1CH-101	CAPACITOR	100pF,16V
C13	QCTA1CH-101	CAPACITOR	100pF,16V
C14	QCTA1CH-101	CAPACITOR	100pF,16V
C15	QCTA1CH-101	CAPACITOR	100pF,16V
C16	QCTA1CH-101	CAPACITOR	100pF,16V
C17	QEK61CM-107	E CAPACITOR	100μF,16V
C19	QEK61CM-107	E CAPACITOR	100μF,16V
C21	QEK61CM-107	E CAPACITOR	100μF,16V
C23	QEK61CM-107	E CAPACITOR	100μF,16V
C25	QCTA1CH-101	CAPACITOR	100pF,16V
C26	QCTA1CH-101	CAPACITOR	100pF,16V
C27	QCTA1CH-101	CAPACITOR	100pF,16V

#△REF No.	PART No.	PART NAME,	DESCRIPTION
C28	QCTA1CH-101	CAPACITOR	100pF,16V
C33	QEPC1CM-226	NP E CAPACITOR	22μF,16V
C34	QEPC1CM-226	NP E CAPACITOR	22μF,16V
C35	QEPC1CM-226	NP E CAPACITOR	22μF,16V
C36	QEPC1CM-226	NP E CAPACITOR	22μF,16V
SW1	PGZ01210	SLIDE SWITCH	
SW2	PGZ01210	SLIDE SWITCH	
SW3	PGZ00470-02	SLIDE SWITCH	
SW4	PGZ00470-02	SLIDE SWITCH	
SW5	PGZ00742-02	SLIDE SWITCH	
SW6	PGZ00742-02	SLIDE SWITCH	
SPC1	PU59210-001	W.LOCKING SPACER, ×4	
TP1	PU54983	TEST PIN, ×4 (S822E／S622E)	
CN1	PU58844-3	CONNECTOR	
CN2	PU58844-3R	CONNECTOR	
CN3	PU58844-3Y	CONNECTOR	
CN4	PU58844-3	CONNECTOR	
CN5	PU58844-104	CONNECTOR	
CN6	PU58844-104Y	CONNECTOR	

AUDIO 5 BOARD ASSEMBLY<25>

#△REF No.	PART No.	PART NAME,	DESCRIPTION
IC101	UPC78N12H	IC	
IC102	UPC79N12H	IC	
IC103	UPC78N12H	IC	
IC104	UPC79N12H	IC	
IC105	M5218AL	IC	
IC106	M5218AL	IC	
IC107	NJM4556S	IC	
IC108	NJM4556S	IC	
IC109	NJM4556S	IC	
IC110	NJM4556S	IC	
Q1	DTC323TS	TRANSISTOR	
Q2	DTC323TS	TRANSISTOR	
Q3	DTC323TS	TRANSISTOR	
Q4	DTC323TS	TRANSISTOR	
Q5	DTC323TS	TRANSISTOR	
Q6	DTC323TS	TRANSISTOR	
Q7	DTC323TS	TRANSISTOR	
Q8	DTC323TS	TRANSISTOR	
Q9	DTC124ES	TRANSISTOR	
Q10	DTA114ES	TRANSISTOR	
Q11	2SB1030RS	TRANSISTOR	
D1	1SS133	DIODE	
R101	QRD161J-473	RESISTOR	47kΩ,1／6W
R102	QRD161J-473	RESISTOR	47kΩ,1／6W
R103	QRD161J-473	RESISTOR	47kΩ,1／6W
R104	QRD161J-473	RESISTOR	47kΩ,1／6W
R105	QRV141F-8251AY	CMF RESISTOR	8.25kΩ,1／4W
R106	QRV141F-8251AY	CMF RESISTOR	8.25kΩ,1／4W
R107	QRV141F-8251AY	CMF RESISTOR	8.25kΩ,1／4W
R108	QRV141F-8251AY	CMF RESISTOR	8.25kΩ,1／4W
R109	QRD161J-473	RESISTOR	47kΩ,1／6W
R110	QRD161J-473	RESISTOR	47kΩ,1／6W

<25><26>

#⚠	REF No.	PART No.	PART NAME,	DESCRIPTION
	R111	QRD161J-473	RESISTOR	47kΩ,1/6W
	R112	QRD161J-473	RESISTOR	47kΩ,1/6W
	R113	QRV141F-1212AY	CMF RESISTOR	12.1kΩ,1/4W
	R114	QRV141F-1212AY	CMF RESISTOR	12.1kΩ,1/4W
	R115	QRV141F-1212AY	CMF RESISTOR	12.1kΩ,1/4W
	R116	QRV141F-1212AY	CMF RESISTOR	12.1kΩ,1/4W
	R117	QRV141F-1212AY	CMF RESISTOR	12.1kΩ,1/4W
	R118	QRV141F-1212AY	CMF RESISTOR	12.1kΩ,1/4W
	R119	QRV141F-1212AY	CMF RESISTOR	12.1kΩ,1/4W
	R120	QRV141F-1212AY	CMF RESISTOR	12.1kΩ,1/4W
	R121	QRV141F-1332AY	CMF RESISTOR	13.3kΩ,1/4W
	R122	QRV141F-1332AY	CMF RESISTOR	13.3kΩ,1/4W
	R123	QRV141F-1332AY	CMF RESISTOR	13.3kΩ,1/4W
	R124	QRV141F-1332AY	CMF RESISTOR	13.3kΩ,1/4W
	R125	QRV141F-1212AY	CMF RESISTOR	12.1kΩ,1/4W
	R126	QRV141F-1212AY	CMF RESISTOR	12.1kΩ,1/4W
	R127	QRV141F-1212AY	CMF RESISTOR	12.1kΩ,1/4W
	R128	QRV141F-1212AY	CMF RESISTOR	12.1kΩ,1/4W
	R129	QRV141F-1212AY	CMF RESISTOR	12.1kΩ,1/4W
	R130	QRV141F-1212AY	CMF RESISTOR	12.1kΩ,1/4W
	R131	QRV141F-1212AY	CMF RESISTOR	12.1kΩ,1/4W
	R132	QRV141F-1212AY	CMF RESISTOR	12.1kΩ,1/4W
	R133	QRV141F-1212AY	CMF RESISTOR	12.1kΩ,1/4W
	R134	QRV141F-1212AY	CMF RESISTOR	12.1kΩ,1/4W
	R135	QRV141F-1212AY	CMF RESISTOR	12.1kΩ,1/4W
	R136	QRV141F-1212AY	CMF RESISTOR	12.1kΩ,1/4W
	R137	QRV141F-1212AY	CMF RESISTOR	12.1kΩ,1/4W
	R138	QRV141F-1212AY	CMF RESISTOR	12.1kΩ,1/4W
	R139	QRV141F-1212AY	CMF RESISTOR	12.1kΩ,1/4W
	R140	QRV141F-1212AY	CMF RESISTOR	12.1kΩ,1/4W
	R141	QRV141F-1332AY	CMF RESISTOR	13.3kΩ,1/4W
	R142	QRV141F-1332AY	CMF RESISTOR	13.3kΩ,1/4W
	R143	QRV141F-1332AY	CMF RESISTOR	13.3kΩ,1/4W
	R144	QRV141F-1332AY	CMF RESISTOR	13.3kΩ,1/4W
	R145	QRV141F-1101A	V RESISTOR	1.10kΩ,1/4W
	R146	QRV141F-1101A	V RESISTOR	1.10kΩ,1/4W
	R147	QRV141F-1101A	V RESISTOR	1.10kΩ,1/4W
	R148	QRV141F-1101A	V RESISTOR	1.10kΩ,1/4W
	R149	QRV141F-1741AY	CMF RESISTOR	1.74kΩ,1/4W
	R150	QRV141F-1741AY	CMF RESISTOR	1.74kΩ,1/4W
	R151	QRV141F-1741AY	CMF RESISTOR	1.74kΩ,1/4W
	R152	QRV141F-1741AY	CMF RESISTOR	1.74kΩ,1/4W
	R153	QRV141F-47R5AY	CMF RESISTOR	,1/4W
	R154	QRV141F-47R5AY	CMF RESISTOR	,1/4W
	R155	QRV141F-47R5AY	CMF RESISTOR	,1/4W
	R156	QRV141F-47R5AY	CMF RESISTOR	,1/4W
	R157	QRV141F-47R5AY	CMF RESISTOR	,1/4W
	R158	QRV141F-47R5AY	CMF RESISTOR	,1/4W
	R159	QRV141F-47R5AY	CMF RESISTOR	,1/4W
	R160	QRV141F-47R5AY	CMF RESISTOR	,1/4W
	R161	QRD161J-103	RESISTOR	10kΩ,1/6W
	R162	QRD161J-103	RESISTOR	10kΩ,1/6W
	R163	QRD161J-103	RESISTOR	10kΩ,1/6W
	R164	QRD161J-103	RESISTOR	10kΩ,1/6W
	R165	QRD161J-103	RESISTOR	10kΩ,1/6W
	R166	QRD161J-103	RESISTOR	10kΩ,1/6W
	R167	QRD161J-103	RESISTOR	10kΩ,1/6W
	R168	QRD161J-103	RESISTOR	10kΩ,1/6W
	R169	QRD161J-103	RESISTOR	10kΩ,1/6W
	C109	QETC1CM-107ZE	E CAPACITOR	100μF,16V
	C110	QETC1CM-107ZE	E CAPACITOR	100μF,16V
	C111	QETC1CM-107ZE	E CAPACITOR	100μF,16V
	C112	QETC1CM-107ZE	E CAPACITOR	100μF,16V
	C113	QCYA1HK-103	CAPACITOR	0.01μF,50V
	C114	QCYA1HK-103	CAPACITOR	0.01μF,50V

#⚠	REF No.	PART No.	PART NAME,	DESCRIPTION
	C115	QCYA1HK-103	CAPACITOR	0.01μF,50V
	C116	QCYA1HK-103	CAPACITOR	0.01μF,50V
	C117	QETC1CM-107ZE	E CAPACITOR	100μF,16V
	C118	QETC1CM-107ZE	E CAPACITOR	100μF,16V
	C119	QETC1CM-107ZE	E CAPACITOR	100μF,16V
	C120	QETC1CM-107ZE	E CAPACITOR	100μF,16V
	C121	QCSB1HJ-560	CAPACITOR	56pF,50V
	C122	QCSB1HJ-560	CAPACITOR	56pF,50V
	C123	QCSB1HJ-560	CAPACITOR	56pF,50V
	C124	QCSB1HJ-560	CAPACITOR	56pF,50V
	C125	QETC1CM-107ZE	E CAPACITOR	100μF,16V
	C126	QETC1CM-107ZE	E CAPACITOR	100μF,16V
	C127	QETC1CM-107ZE	E CAPACITOR	100μF,16V
	C128	QETC1CM-107ZE	E CAPACITOR	100μF,16V
	C129	QETC1CM-107ZE	E CAPACITOR	100μF,16V
	C130	QETC1CM-107ZE	E CAPACITOR	100μF,16V
	C131	QETC1CM-107ZE	E CAPACITOR	100μF,16V
	C132	QETC1CM-107ZE	E CAPACITOR	100μF,16V
	C133	QENC1EM-107	NP E CAPACITOR	100μF,25V
	C134	QENC1EM-107	NP E CAPACITOR	100μF,25V
	C135	QENC1EM-107	NP E CAPACITOR	100μF,25V
	C136	QENC1EM-107	NP E CAPACITOR	100μF,25V
	C137	QENC1EM-107	NP E CAPACITOR	100μF,25V
	C138	QENC1EM-107	NP E CAPACITOR	100μF,25V
	C139	QENC1EM-107	NP E CAPACITOR	100μF,25V
	C140	QENC1EM-107	NP E CAPACITOR	100μF,25V
	C145	QETC1CM-476	E CAPACITOR	47μF,16V
	C146	QETC1CM-337	E CAPACITOR	330μF,16V
	C149	QCTA1CH-180	CAPACITOR	18pF,16V
	C150	QCTA1CH-180	CAPACITOR	18pF,16V
	C151	QCTA1CH-180	CAPACITOR	18pF,16V
	C152	QCTA1CH-180	CAPACITOR	18pF,16V
	C153	QCTA1CH-180	CAPACITOR	18pF,16V
	C154	QCTA1CH-180	CAPACITOR	18pF,16V
	C155	QCTA1CH-180	CAPACITOR	18pF,16V
	C156	QCTA1CH-180	CAPACITOR	18pF,16V
	CN10	PU58844-3	CONNECTOR	
	CN11	PU58844-3	CONNECTOR	
	CN12	PU58844-3R	CONNECTOR	
	CN13	PU58844-3Y	CONNECTOR	
	CN14	PU58844-3	CONNECTOR	
	CN15	PU58844-4Y	CONNECTOR	
	CN16	PU58844-4R	CONNECTOR	
	CN17	PU58844-3	CONNECTOR	
	CN18	PU58844-3R	CONNECTOR -	
	CN19	PU58844-3Y	CONNECTOR	
⚠	CP1	ICP-F10	CIRCUIT PROTECTOR	
⚠	CP2	ICP-F10	CIRCUIT PROTECTOR	

AUDIO 6 BOARD ASSEMBLY<26>

REF No.	PART No.	PART NAME,
PWBA	PRK30066A1	AUDIO 6 BOARD ASSY
IC1	M5201FP	IC
IC2	M5201FP	IC
IC3	M5201FP	IC
IC4	M5201FP	IC
IC5	NJM2068MD	IC
IC6	NJM2068MD	IC
IC7	NJM2068MD	IC

#△REF No.	PART No.	PART NAME, DESCRIPTION	
IC8	M5216FP	IC	
IC9	M5278L12M	IC	
IC10	M5278L12M	IC	
R1	QRSA08J-472YN	RESISTOR	4.7kΩ,1/10W
R2	QRSA08J-472YN	RESISTOR	4.7kΩ,1/10W
R3	QRSA08J-472YN	RESISTOR	4.7kΩ,1/10W
R4	QRSA08J-472YN	RESISTOR	4.7kΩ,1/10W
R5	QRSA08J-124YN	RESISTOR	120kΩ,1/10W
R6	QRSA08J-124YN	RESISTOR	120kΩ,1/10W
R7	QRSA08J-124YN	RESISTOR	120kΩ,1/10W
R8	QRSA08J-124YN	RESISTOR	120kΩ,1/10W
R9	QRSA08J-472YN	RESISTOR	4.7kΩ,1/10W
R10	QRSA08J-472YN	RESISTOR	4.7kΩ,1/10W
R11	QRSA08J-472YN	RESISTOR	4.7kΩ,1/10W
R12	QRSA08J-472YN	RESISTOR	4.7kΩ,1/10W
R13	QRSA08J-124YN	RESISTOR	120kΩ,1/10W
R14	QRSA08J-124YN	RESISTOR	120kΩ,1/10W
R15	QRSA08J-124YN	RESISTOR	120kΩ,1/10W
R16	QRSA08J-124YN	RESISTOR	120kΩ,1/10W
R17	QRSA08J-563YN	RESISTOR	56kΩ,1/10W
R18	QRSA08J-563YN	RESISTOR	56kΩ,1/10W
R19	QRSA08J-153YN	RESISTOR	15kΩ,1/10W
R20	QRSA08J-153YN	RESISTOR	15kΩ,1/10W
R21	QRSA08J-473YN	RESISTOR	47kΩ,1/10W
R22	QRSA08J-473YN	RESISTOR	47kΩ,1/10W
R23	QRSA08J-473YN	RESISTOR	47kΩ,1/10W
R24	QRSA08J-473YN	RESISTOR	47kΩ,1/10W
R25	QRSA08J-472YN	RESISTOR	4.7kΩ,1/10W
R26	QRSA08J-472YN	RESISTOR	4.7kΩ,1/10W
R27	QRSA08J-124YN	RESISTOR	120kΩ,1/10W
R28	QRSA08J-124YN	RESISTOR	120kΩ,1/10W
R29	QRSA08J-153YN	RESISTOR	15kΩ,1/10W
R30	QRSA08J-153YN	RESISTOR	15kΩ,1/10W
R31	QRSA08J-563YN	RESISTOR	56kΩ,1/10W
R32	QRSA08J-563YN	RESISTOR	56kΩ,1/10W
R33	QRSA08J-472YN	RESISTOR	4.7kΩ,1/10W
R34	QRSA08J-472YN	RESISTOR	4.7kΩ,1/10W
R35	QRSA08J-124YN	RESISTOR	120kΩ,1/10W
R36	QRSA08J-124YN	RESISTOR	120kΩ,1/10W
R37	QRSA08J-563YN	RESISTOR	56kΩ,1/10W
R38	QRSA08J-563YN	RESISTOR	56kΩ,1/10W
R39	QRSA08J-221YN	RESISTOR	220Ω,1/10W
R40	QRSA08J-221YN	RESISTOR	220Ω,1/10W
R41	QRSA08J-270YN	RESISTOR	27Ω,1/10W
R42	QRSA08J-270YN	RESISTOR	27Ω,1/10W
R45	QRSA08J-472YN	RESISTOR	4.7kΩ,1/10W
R46	QRSA08J-472YN	RESISTOR	4.7kΩ,1/10W
R47	QRSA08J-124YN	RESISTOR	120kΩ,1/10W
R48	QRSA08J-124YN	RESISTOR	120kΩ,1/10W
R49	QRSA08J-103YN	RESISTOR	10kΩ,1/10W
R50	QRSA08J-103YN	RESISTOR	10kΩ,1/10W
R51	QRSA08J-223YN	RESISTOR	22kΩ,1/10W
R52	QRSA08J-223YN	RESISTOR	22kΩ,1/10W
R55	NRS016J-151NZR	RESISTOR	150Ω,1W
R56	NRS016J-151NZR	RESISTOR	150Ω,1W
R57	QRSA08J-330YN	RESISTOR	33Ω,1/10W
R58	QRSA08J-330YN	RESISTOR	33Ω,1/10W
R59	QRSA08J-103YN	RESISTOR	10kΩ,1/10W
R60	QRSA08J-103YN	RESISTOR	10kΩ,1/10W
R65	QRSA08J-472YN	RESISTOR	4.7kΩ,1/10W
R66	QRSA08J-472YN	RESISTOR	4.7kΩ,1/10W
R67	QRSA08J-124YN	RESISTOR	120kΩ,1/10W
R68	QRSA08J-124YN	RESISTOR	120kΩ,1/10W
R101	QRSA08J-0R0Y	RESISTOR	0Ω,1/10W

#△REF No.	PART No.	PART NAME, DESCRIPTION	
C1	QEF81AM-475	TANTAL CAPACITOR	4.7μF,10V
C2	QEF81AM-475	TANTAL CAPACITOR	4.7μF,10V
C3	QEF81AM-475	TANTAL CAPACITOR	4.7μF,10V
C4	QEF81AM-475	TANTAL CAPACITOR	4.7μF,10V
C5	QEF81AM-336	TANTAL CAPACITOR	33μF,10V
C6	QEF81AM-336	TANTAL CAPACITOR	33μF,10V
C7	QCTA1CH-8R0	CAPACITOR	8pF,16V
C8	QCTA1CH-8R0	CAPACITOR	8pF,16V
C9	QEF81AM-475	TANTAL CAPACITOR	4.7μF,10V
C10	QEF81AM-475	TANTAL CAPACITOR	4.7μF,10V
C11	QEF81AM-475	TANTAL CAPACITOR	4.7μF,10V
C12	QEF81AM-475	TANTAL CAPACITOR	4.7μF,10V
C13	QEF81AM-475	TANTAL CAPACITOR	4.7μF,10V
C14	QEF81AM-475	TANTAL CAPACITOR	4.7μF,10V
C15	QEF81AM-336	TANTAL CAPACITOR	33μF,10V
C16	QEF81AM-336	TANTAL CAPACITOR	33μF,10V
C17	QEF81CM-226	TANTAL CAPACITOR	22μF,16V
C18	QEF81CM-226	TANTAL CAPACITOR	22μF,16V
C19	QEF81CM-226	TANTAL CAPACITOR	22μF,16V
C20	QEF81CM-226	TANTAL CAPACITOR	22μF,16V
C21	QEF81CM-226	TANTAL CAPACITOR	22μF,16V
C22	QEF81CM-226	TANTAL CAPACITOR	22μF,16V
C23	QEF81AM-475	TANTAL CAPACITOR	4.7μF,10V
C24	QEF81AM-475	TANTAL CAPACITOR	4.7μF,10V
C25	QEF81CM-226	TANTAL CAPACITOR	22μF,16V
C26	QEF81CM-226	TANTAL CAPACITOR	22μF,16V
C27	QCTA1CH-8R0	CAPACITOR	8pF,16V
C28	QCTA1CH-8R0	CAPACITOR	8pF,16V
C29	QEF81CM-226	TANTAL CAPACITOR	22μF,16V
C30	QEF81AM-336	TANTAL CAPACITOR	33μF,10V
C31	QEF81AM-336	TANTAL CAPACITOR	33μF,10V
C32	QEF81AM-336	TANTAL CAPACITOR	33μF,10V
C33	QCTA1CH-3R0	CAPACITOR	3pF,16V
C34	QCTA1CH-3R0	CAPACITOR	3pF,16V
C35	QEF81CM-226	TANTAL CAPACITOR	22μF,16V
C36	QEF81CM-226	TANTAL CAPACITOR	22μF,16V
C37	QEF81CM-226	TANTAL CAPACITOR	22μF,16V
C38	QEF81AM-336	TANTAL CAPACITOR	33μF,10V
C41	QEF81CM-226	TANTAL CAPACITOR	22μF,16V
C42	QEF81CM-226	TANTAL CAPACITOR	22μF,16V
C43	QCTA1CH-820	CAPACITOR	82pF,16V
C44	QCTA1CH-820	CAPACITOR	82pF,16V
C45	QEF81AM-336	TANTAL CAPACITOR	33μF,10V
C46	QEF81AM-336	TANTAL CAPACITOR	33μF,10V
C47	QEF81AM-336	TANTAL CAPACITOR	33μF,10V
C48	QEF81AM-336	TANTAL CAPACITOR	33μF,10V
C49	QCYA1EK-104	CAPACITOR	0.1μF,25V
C50	QCYA1EK-104	CAPACITOR	0.1μF,25V
C51	QEF81CM-226	TANTAL CAPACITOR	22μF,16V
C52	QEF81CM-226	TANTAL CAPACITOR	22μF,16V
C53	QEF81AM-336	TANTAL CAPACITOR	33μF,10V
C58	QCYA1HK-103	CAPACITOR	0.01μF,50V
C59	QEF81CM-226	TANTAL CAPACITOR	22μF,16V
C60	QCYA1HK-103	CAPACITOR	0.01μF,50V
C61	QEF81CM-226	TANTAL CAPACITOR	22μF,16V
C62	QCYA1HK-103	CAPACITOR	0.01μF,50V
C63	QEF81AM-336	TANTAL CAPACITOR	33μF,10V
C64	QEF81CM-226	TANTAL CAPACITOR	22μF,16V
C65	QEF81AM-475	TANTAL CAPACITOR	4.7μF,10V
C66	QEF81AM-475	TANTAL CAPACITOR	4.7μF,10V
CN1	PU58844-104	CONNECTOR	
CN2	PU58844-104Y	CONNECTOR	
CN3	PU58844-104	CONNECTOR	
CN4	PU58844-104R	CONNECTOR	
CN8	PU58844-106	CONNECTOR	

#⚠REF No.	PART No.	PART NAME, DESCRIPTION	
CN10	PU58844-106	CONNECTOR	

JACK BOARD ASSEMBLY<27>

#⚠REF No.	PART No.	PART NAME, DESCRIPTION	
PWBA	PRK30066A2	JACK BOARD ASSY	
Q1	DTC323TK	TRANSISTOR	
Q2	DTC323TK	TRANSISTOR	
VR5	PGZ01525	V RESISTOR	
R43	QRSA08J-123YN	RESISTOR	12kΩ,1/10W
R44	QRSA08J-123YN	RESISTOR	12kΩ,1/10W
R53	QRSA08J-470YN	RESISTOR	47Ω,1/10W
R54	QRSA08J-470YN	RESISTOR	47Ω,1/10W
C39	QEF81AM-475	TANTAL CAPACITOR	4.7μF,10V
C40	QEF81AM-475	TANTAL CAPACITOR	4.7μF,10V
C55	QEF81AM-475	TANTAL CAPACITOR	4.7μF,10V
C56	QEF81AM-475	TANTAL CAPACITOR	4.7μF,10V
J1	PGZ00595-02	MIC JACK	
J2	PGZ00595-02	MIC JACK	
J3	PGZ00725	JACK	
CN6	PU58844-4Y	CONNECTOR	

VR BOARD ASSEMBLY<28>

#⚠REF No.	PART No.	PART NAME, DESCRIPTION	
PWBA	PRK30066A3	VR BOARD ASSY	
VR1	PGZ01525	V RESISTOR	
VR2	PGZ01525	V RESISTOR	
VR3	PGZ01524	V RESISTOR	
VR4	PGZ01524	V RESISTOR	
R61	QRSA08J-102YN	RESISTOR	1kΩ,1/10W
R62	QRSA08J-102YN	RESISTOR	1kΩ,1/10W
R63	QRSA08J-332YN	RESISTOR	3.3kΩ,1/10W
R64	QRSA08J-332YN	RESISTOR	3.3kΩ,1/10W
C67	QEF81AM-475	TANTAL CAPACITOR	4.7μF,10V
C68	QEF81AM-475	TANTAL CAPACITOR	4.7μF,10V
CN1	PGZ01081-05	CONNECTOR, ×3	

A/C HEAD BOARD ASSEMBLY<29>

#⚠REF No.	PART No.	PART NAME, DESCRIPTION	
PWB	PGE40328-01-02	A/C HEAD BOARD	
CN1	PU58844-111	CONNECTOR	

D/C SERVO BOARD ASSEMBLY<30>

#⚠REF No.	PART No.	PART NAME, DESCRIPTION
PWBA	PRK10058B	D/C SERVO BOARD ASSY
IC1	UPD74HC04G	IC
IC2	UPD4053BG	IC
IC3	UPD4053BG	IC
IC4	BA10393F	IC
IC5	SM6430C	IC
IC7	TC4W53F	IC
IC8	NJM2068MD	IC
IC9	NJM2068MD	IC
IC10	BA10393F	IC
IC11	TC4572BP	IC
IC12	UPD4053BG	IC
IC13	M5278L12	IC
IC14	NJM2068MD	IC
IC15	BA10393F	IC
IC16	M5278L05	IC
IC17	UPD4001BG	IC
IC18	TC4S30F	IC
IC19	UPD4013BG	IC
IC20	UPD78P138GF-006	IC
IC22	M51957BL	IC
IC23	M5278L05	IC
IC24	BA10324F	IC
or	BA10324AF	IC
Q1	2SB643R	TRANSISTOR
Q2	2SA933S(RS)	TRANSISTOR
Q3	2SC1740S(RS)	TRANSISTOR
Q4	2SA933S(RS)	TRANSISTOR
Q5	2SC1740S(RS)	TRANSISTOR
Q6	2SC1740S(RS)	TRANSISTOR
Q7	2SK656	FE TRANSISTOR
Q8	2SC1740S(RS)	TRANSISTOR
Q9	DTC144ES	TRANSISTOR
Q10	2SC1740S(RS)	TRANSISTOR
Q11	DTC144ES	TRANSISTOR
Q12	DTC144ES	TRANSISTOR
Q13	2SA933S(RS)	TRANSISTOR
Q14	2SC1740S(RS)	TRANSISTOR
Q15	2SC1740S(RS)	TRANSISTOR
Q16	DTC144ES	TRANSISTOR
Q17	2SC1740S(RS)	TRANSISTOR
Q18	2SC1740S(RS)	TRANSISTOR
Q19	DTC144ES	TRANSISTOR
Q20	DTC144ES	TRANSISTOR
Q22	DTC144ES	TRANSISTOR
Q23	2SC1740S(RS)	TRANSISTOR
Q24	2SA933S(RS)	TRANSISTOR
Q25	2SC1740S(RS)	TRANSISTOR
Q26	2SD1691(K)	TRANSISTOR
Q28	2SK656	FE TRANSISTOR
Q29	2SC1740S(RS)	TRANSISTOR
Q30	2SC1740S(RS)	TRANSISTOR
Q31	2SA933S(RS)	TRANSISTOR
Q32	DTC144ES	TRANSISTOR
Q33	DTC144ES	TRANSISTOR

#△REF No.	PART No.	PART NAME,	DESCRIPTION
D1	1SS133	DIODE	
D2	1SS99	DIODE	
D3	1SS133	DIODE	
D4	1SS133	DIODE	
D5	1SS133	DIODE	
D6	1SS133	DIODE	
D7	HZ5CLL	ZENER DIODE	
D8	HZ5CLL	ZENER DIODE	
D9	1SS133	DIODE	
D10	1SS133	DIODE	
D13	1SS133	DIODE	
D14	1SS133	DIODE	
D15	1SS133	DIODE	
R1	QRD161J-104	RESISTOR	100kΩ,1/6W
R2	QRD161J-272	RESISTOR	2.7kΩ,1/6W
R3	QRD161J-272	RESISTOR	2.7kΩ,1/6W
R4	QRD161J-222	RESISTOR	2.2kΩ,1/6W
R5	QRD161J-272	RESISTOR	2.7kΩ,1/6W
R6	QRD161J-183	RESISTOR	18kΩ,1/6W
R7	QRD161J-222	RESISTOR	2.2kΩ,1/6W
R8	QRD161J-103	RESISTOR	10kΩ,1/6W
R9	QRD161J-222	RESISTOR	2.2kΩ,1/6W
R10	QRD161J-101	RESISTOR	100Ω,1/6W
R11	QRD161J-222	RESISTOR	2.2kΩ,1/6W
R12	QRD161J-222	RESISTOR	2.2kΩ,1/6W
R13	QRD161J-272	RESISTOR	2.7kΩ,1/6W
R14	QRD161J-102	RESISTOR	1kΩ,1/6W
R15	QRD161J-561	RESISTOR	560Ω,1/6W
R16	QRD161J-103	RESISTOR	10kΩ,1/6W
R17	QRV141F-1822AY	CMF RESISTOR	18.2kΩ,1/4W
R18	QRV141F-3403AY	CMF RESISTOR	340kΩ,1/4W
R19	QRV141F-3403AY	CMF RESISTOR	340kΩ,1/4W
R20	QRV141F-3403AY	CMF RESISTOR	340kΩ,1/4W
R21	QRV141F-2211AY	CMF RESISTOR	2.21kΩ,1/4W
R22	QRD161J-224	RESISTOR	220kΩ,1/6W
R23	QRD161J-222	RESISTOR	2.2kΩ,1/6W
R24	QRD161J-222	RESISTOR	2.2kΩ,1/6W
R25	QRD161J-224	RESISTOR	220kΩ,1/6W
R26	QRD161J-222	RESISTOR	2.2kΩ,1/6W
R27	QRD161J-223	RESISTOR	22kΩ,1/6W
R28	QRD161J-102	RESISTOR	1kΩ,1/6W
R29	QRD161J-473	RESISTOR	47kΩ,1/6W
R30	QRD161J-684	RESISTOR	680kΩ,1/6W
R31	QRD161J-223	RESISTOR	22kΩ,1/6W
R32	QRD161J-102	RESISTOR	1kΩ,1/6W
R33	QRD161J-224	RESISTOR	220kΩ,1/6W
R34	QRD161J-222	RESISTOR	2.2kΩ,1/6W
R35	QRD161J-100	RESISTOR	10Ω,1/6W
R36	QRD161J-475	RESISTOR	4.7MΩ,1/6W
R37	QRD161J-154	RESISTOR	150kΩ,1/6W
R39	QRV141F-3403AY	CMF RESISTOR	340kΩ,1/4W
R40	QRV141F-1822AY	CMF RESISTOR	18.2kΩ,1/4W
R41	QRV141F-3403AY	CMF RESISTOR	340kΩ,1/4W
R42	QRV141F-3403AY	CMF RESISTOR	340kΩ,1/4W
R43	QRV141F-2211AY	CMF RESISTOR	2.21kΩ,1/4W
R44	QRD161J-102	RESISTOR	1kΩ,1/6W
R45	QRD161J-102	RESISTOR	1kΩ,1/6W
R47	QRD161J-223	RESISTOR	22kΩ,1/6W
R48	QRD161J-561	RESISTOR	560Ω,1/6W
R49	QRD161J-102	RESISTOR	1kΩ,1/6W
R50	QRD161J-824	RESISTOR	820kΩ,1/6W
R51	QRD161J-185	RESISTOR	1.8MΩ,1/6W
R52	QRD161J-102	RESISTOR	1kΩ,1/6W
R53	QRD161J-123	RESISTOR	12kΩ,1/6W
R54	QRD161J-102	RESISTOR	1kΩ,1/6W

#△REF No.	PART No.	PART NAME,	DESCRIPTION
R55	QRD161J-393	RESISTOR	39kΩ,1/6W
R57	QRD161J-105	RESISTOR	1MΩ,1/6W
R58	QRD161J-393	RESISTOR	39kΩ,1/6W
R59	QRD161J-103	RESISTOR	10kΩ,1/6W
R60	QRD161J-103	RESISTOR	10kΩ,1/6W
R61	QRD161J-102	RESISTOR	1kΩ,1/6W
R62	QRD161J-183	RESISTOR	18kΩ,1/6W
R63	QRD161J-100	RESISTOR	10Ω,1/6W
R64	QRD161J-222	RESISTOR	2.2kΩ,1/6W
R65	QRD161J-152	RESISTOR	1.5kΩ,1/6W
R66	QRD161J-683	RESISTOR	68kΩ,1/6W
R67	QRD161J-473	RESISTOR	47kΩ,1/6W
R68	QRD161J-103	RESISTOR	10kΩ,1/6W
R69	QRD161J-182	RESISTOR	1.8kΩ,1/6W
R70	QRD161J-103	RESISTOR	10kΩ,1/6W
R71	QRD161J-103	RESISTOR	10kΩ,1/6W
R72	QRD161J-472	RESISTOR	4.7kΩ,1/6W
R73	QRD161J-472	RESISTOR	4.7kΩ,1/6W
R74	QRD161J-103	RESISTOR	10kΩ,1/6W
R75	QRD161J-104	RESISTOR	100kΩ,1/6W
R76	QRD161J-104	RESISTOR	100kΩ,1/6W
R77	QRD161J-472	RESISTOR	4.7kΩ,1/6W
R78	QRD161J-473	RESISTOR	47kΩ,1/6W
R79	QRD161J-103	RESISTOR	10kΩ,1/6W
R80	QRD161J-103	RESISTOR	10kΩ,1/6W
R81	QRD161J-222	RESISTOR	2.2kΩ,1/6W
R82	QRV141F-2211AY	CMF RESISTOR	2.21kΩ,1/4W
R83	QVZ3521-101	V RESISTOR	100Ω
R84	QRV141F-2211AY	CMF RESISTOR	2.21kΩ,1/4W
R85	QRD161J-152	RESISTOR	1.5kΩ,1/6W
R86	QRD161J-684	RESISTOR	680kΩ,1/6W
R87	QRD161J-333	RESISTOR	33kΩ,1/6W
R88	QRD161J-222	RESISTOR	2.2kΩ,1/6W
R89	QRD161J-104	RESISTOR	100kΩ,1/6W
R90	QRD161J-222	RESISTOR	2.2kΩ,1/6W
R91	QRD161J-222	RESISTOR	2.2kΩ,1/6W
R92	QRV141F-2211AY	CMF RESISTOR	2.21kΩ,1/4W
R93	QVZ3521-101	V RESISTOR	100Ω
R94	QRV141F-2211AY	CMF RESISTOR	2.21kΩ,1/4W
R95	QRD161J-562	RESISTOR	5.6kΩ,1/6W
R96	QRD161J-684	RESISTOR	680kΩ,1/6W
R97	QRD161J-103	RESISTOR	10kΩ,1/6W
R98	QRD161J-222	RESISTOR	2.2kΩ,1/6W
R99	QRD161J-222	RESISTOR	2.2kΩ,1/6W
R100	QRD161J-104	RESISTOR	100kΩ,1/6W
R101	QRD161J-222	RESISTOR	2.2kΩ,1/6W
R102	QRD161J-473	RESISTOR	47kΩ,1/6W
R103	QRD161J-103	RESISTOR	10kΩ,1/6W
R104	QRD161J-473	RESISTOR	47kΩ,1/6W
R105	QRD161J-472	RESISTOR	4.7kΩ,1/6W
R106	QRD161J-222	RESISTOR	2.2kΩ,1/6W
R107	QRD161J-105	RESISTOR	1MΩ,1/6W
R108	QRD161J-103	RESISTOR	10kΩ,1/6W
R109	QRD161J-104	RESISTOR	100kΩ,1/6W
R110	QRD161J-103	RESISTOR	10kΩ,1/6W
R112	QRD161J-102	RESISTOR	1kΩ,1/6W
R113	QRD161J-222	RESISTOR	2.2kΩ,1/6W
R114	QRD161J-222	RESISTOR	2.2kΩ,1/6W
R115	QRD161J-224	RESISTOR	220kΩ,1/6W
R116	QRD161J-224	RESISTOR	220kΩ,1/6W
R117	QRD161J-100	RESISTOR	10Ω,1/6W
R118	QRD161J-102	RESISTOR	1kΩ,1/6W
R119	QRD161J-102	RESISTOR	1kΩ,1/6W
R120	QRD161J-102	RESISTOR	1kΩ,1/6W
R121	QRD161J-102	RESISTOR	1kΩ,1/6W
R122	QRD161J-102	RESISTOR	1kΩ,1/6W
R123	QRD161J-102	RESISTOR	1kΩ,1/6W

<30>

#△REF No.	PART No.	PART NAME, DESCRIPTION	
R124	QRD161J-272	RESISTOR	2.7kΩ,1/6W
R125	QRD161J-103	RESISTOR	10kΩ,1/6W
R126	QRD161J-103	RESISTOR	10kΩ,1/6W
R127	QRD161J-222	RESISTOR	2.2kΩ,1/6W
R128	QRD161J-153	RESISTOR	15kΩ,1/6W
R129	QRD161J-472	RESISTOR	4.7kΩ,1/6W
R130	QRD161J-153	RESISTOR	15kΩ,1/6W
R131	QRD161J-222	RESISTOR	2.2kΩ,1/6W
R132	QRD161J-273	RESISTOR	27kΩ,1/6W
R133	QRD161J-183	RESISTOR	18kΩ,1/6W
R134	QRD161J-681	RESISTOR	680Ω,1/6W
R135	QRD161J-271	RESISTOR	270Ω,1/6W
R136	QRD161J-271	RESISTOR	270Ω,1/6W
R137	QRD161J-271	RESISTOR	270Ω,1/6W
R138	QRD161J-102	RESISTOR	1kΩ,1/6W
R139	QRD161J-271	RESISTOR	270Ω,1/6W
R140	QRD161J-102	RESISTOR	1kΩ,1/6W
R141	QRD161J-102	RESISTOR	1kΩ,1/6W
R142	QRD161J-102	RESISTOR	1kΩ,1/6W
R143	QRD161J-224	RESISTOR	220kΩ,1/6W
R144	QRD161J-224	RESISTOR	220kΩ,1/6W
R145	QRD161J-103	RESISTOR	10kΩ,1/6W
R146	QVZ3521-223	V RESISTOR	22kΩ
R147	QVZ3521-223	V RESISTOR	22kΩ
R148	QRD161J-222	RESISTOR	2.2kΩ,1/6W
R149	QRD161J-822	RESISTOR	8.2kΩ,1/6W
R150	QRD161J-103	RESISTOR	10kΩ,1/6W
R151	QRD161J-104	RESISTOR	100kΩ,1/6W
R152	QRD161J-154	RESISTOR	150kΩ,1/6W
R154	QRD161J-104	RESISTOR	100kΩ,1/6W
R155	QRD161J-103	RESISTOR	10kΩ,1/6W
R156	QRD161J-103	RESISTOR	10kΩ,1/6W
R157	QRD161J-472	RESISTOR	4.7kΩ,1/6W
R158	QRD161J-222	RESISTOR	2.2kΩ,1/6W
R159	QRD161J-104	RESISTOR	100kΩ,1/6W
R160	QRD161J-473	RESISTOR	47kΩ,1/6W
R161	QRD161J-473	RESISTOR	47kΩ,1/6W
R162	QRD161J-184	RESISTOR	180kΩ,1/6W
R163	QRD161J-103	RESISTOR	10kΩ,1/6W
R164	QRD161J-103	RESISTOR	10kΩ,1/6W
R165	QRD161J-221	RESISTOR	220Ω,1/6W
R166	QRD161J-272	RESISTOR	2.7kΩ,1/6W
R167	QRD161J-103	RESISTOR	10kΩ,1/6W
R173	QRD161J-102	RESISTOR	1kΩ,1/6W
R174	QRD161J-104	RESISTOR	100kΩ,1/6W
R175	QRD161J-152	RESISTOR	1.5kΩ,1/6W
R176	QRD161J-224	RESISTOR	220kΩ,1/6W
R178	QRD161J-104	RESISTOR	100kΩ,1/6W
R179	QRD161J-104	RESISTOR	100kΩ,1/6W
R180	QRD161J-824	RESISTOR	820kΩ,1/6W
R181	QRD161J-104	RESISTOR	100kΩ,1/6W
R182	QRD161J-272	RESISTOR	2.7kΩ,1/6W
R183	QRD161J-123	RESISTOR	12kΩ,1/6W
R184	QRD161J-561	RESISTOR	560Ω,1/6W
R185	QVZ3521-103	V RESISTOR	10kΩ
R186	QRD161J-102	RESISTOR	1kΩ,1/6W
R301	QRD167J-0R0	RESISTOR	0Ω,1/6W
R302	QRD167J-0R0	RESISTOR	0Ω,1/6W
C1	QENC1CM-226	NP E CAPACITOR	22μF,16V
C2	QETC1CM-106	E CAPACITOR	10μF,16V
C3	QETC1CM-476	E CAPACITOR	47μF,16V
C4	QCTA1CH-390	CAPACITOR	39pF,16V
C5	QCTA1CH-121	CAPACITOR	120pF,16V
C6	QFN31HJ-154	M CAPACITOR	0.15μF,50V
C7	QFP42AF-102M	PP CAPACITOR	0.001μF,100V

#△REF No.	PART No.	PART NAME, DESCRIPTION	
C8	QFN31HJ-102	M CAPACITOR	0.001μF,50V
C9	QETC1HM-105	E CAPACITOR	1μF,50V
C10	QETC1HM-225	E CAPACITOR	2.2μF,50V
C11	QETC1HM-105	E CAPACITOR	1μF,50V
C12	QETC1HM-225	E CAPACITOR	2.2μF,50V
C13	QCTA1CH-390	CAPACITOR	39pF,16V
C14	QCTA1CH-390	CAPACITOR	39pF,16V
C15	QFP42AF-102M	PP CAPACITOR	0.001μF,100V
C16	QCYA1HK-102	CAPACITOR	0.001μF,50V
C17	QCS31HJ-271	CAPACITOR	270pF,50V
C18	QFN31HJ-102	M CAPACITOR	0.001μF,50V
C19	QCTA1CH-331	CAPACITOR	330pF,16V
C21	QENC1CM-336	NP E CAPACITOR	33μF,16V
C22	QETC1CM-227	E CAPACITOR	220μF,16V
C23	QFN31HJ-104	M CAPACITOR	0.1μF,50V
C24	QCYA1HK-223	CAPACITOR	0.022μF,50V
C25	QETC1EM-476	E CAPACITOR	47μF,25V
C26	QETC1CM-476	E CAPACITOR	47μF,16V
C27	QCYA1HK-223	CAPACITOR	0.022μF,50V
C28	QFN31HJ-103	M CAPACITOR	0.01μF,50V
C29	QFN31HJ-103	M CAPACITOR	0.01μF,50V
C30	QCTA1CH-100	CAPACITOR	10pF,16V
C32	QETC0JM-476	E CAPACITOR	47μF,6.3V
C33	QCYA1HK-223	CAPACITOR	0.022μF,50V
C34	QETC1CM-476	E CAPACITOR	47μF,16V
C35	QCYA1HK-223	CAPACITOR	0.022μF,50V
C36	QCTA1CH-100	CAPACITOR	10pF,16V
C37	QFN31HJ-104	M CAPACITOR	0.1μF,50V
C38	QCTA1CH-100	CAPACITOR	10pF,16V
C40	QCTA1CH-101	CAPACITOR	100pF,16V
C41	QETC1CM-106	E CAPACITOR	10μF,16V
C42	QFN31HJ-103	M CAPACITOR	0.01μF,50V
C43	QCYA1HK-103	CAPACITOR	0.01μF,50V
C44	QCYA1HK-223	CAPACITOR	0.022μF,50V
C45	QCTA1CH-270	CAPACITOR	27pF,16V
C46	QCTA1CH-470	CAPACITOR	47pF,16V
C47	QETC1HM-104	E CAPACITOR	0.1μF,50V
C48	QCYA1HK-103	CAPACITOR	0.01μF,50V
C49	QCYA1HK-103	CAPACITOR	0.01μF,50V
C50	QCYA1HK-103	CAPACITOR	0.01μF,50V
C51	QCYA1HK-223	CAPACITOR	0.022μF,50V
C52	QETC0JM-476	E CAPACITOR	47μF,6.3V
C53	QETC1CM-476	E CAPACITOR	47μF,16V
C54	QCYA1HK-223	CAPACITOR	0.022μF,50V
C55	QCYA1HK-223	CAPACITOR	0.022μF,50V
C56	QCYA1HK-223	CAPACITOR	0.022μF,50V
C57	QCYA1HK-223	CAPACITOR	0.022μF,50V
C58	QFN31HJ-473	M CAPACITOR	0.047μF,50V
C59	QFN31HJ-273	M CAPACITOR	0.027μF,50V
C61	QETC1HM-105	E CAPACITOR	1μF,50V
C62	QFN31HJ-472	M CAPACITOR	0.0047μF,50V
C63	QFN31HJ-472	M CAPACITOR	0.0047μF,50V
C64	QETC1CM-476	E CAPACITOR	47μF,16V
C65	QCYA1HK-223	CAPACITOR	0.022μF,50V
C66	QCTA1CH-101	CAPACITOR	100pF,16V
C67	QETC1HM-105	E CAPACITOR	1μF,50V
C68	QCYA1HK-223	CAPACITOR	0.022μF,50V
C69	QCYA1HK-223	CAPACITOR	0.022μF,50V
C70	QCYA1HK-223	CAPACITOR	0.022μF,50V
C71	QCYA1HK-223	CAPACITOR	0.022μF,50V
C72	QCYA1HK-223	CAPACITOR	0.022μF,50V
C73	QCYA1HK-223	CAPACITOR	0.022μF,50V
C74	QCYA1HK-223	CAPACITOR	0.022μF,50V
C75	QCYA1HK-223	CAPACITOR	0.022μF,50V
C76	QCYA1HK-223	CAPACITOR	0.022μF,50V
C77	QCYA1HK-223	CAPACITOR	0.022μF,50V
C78	QCYA1HK-223	CAPACITOR	0.022μF,50V

#⚠	REF No.	PART No.	PART NAME, DESCRIPTION	
	C79	QCYA1HK-223	CAPACITOR	0.022µF,50V
	C80	QCYA1HK-223	CAPACITOR	0.022µF,50V
	C81	QCYA1HK-223	CAPACITOR	0.022µF,50V
	C82	QCYA1HK-223	CAPACITOR	0.022µF,50V
	C83	QCYA1HK-223	CAPACITOR	0.022µF,50V
	C84	QCYA1HK-223	CAPACITOR	0.022µF,50V
	C85	QCYA1HK-223	CAPACITOR	0.022µF,50V
	C86	QCYA1HK-223	CAPACITOR	0.022µF,50V
	C87	QCYA1HK-223	CAPACITOR	0.022µF,50V
	C88	QCYA1HK-223	CAPACITOR	0.022µF,50V
	C89	QCYA1HK-223	CAPACITOR	0.022µF,50V
	L1	PU48530-471J	COIL	470µH
	L2	PU48530-221J	COIL	220µH
⚠	X1	PU47220	CRYSTAL RESONATOR	
⚠	X2	PEVB0335	CRYSTAL RESONATOR	
	HS1	PRD43027	HEAT SINK	
	SCW1	SPSP3008Z	SCREW	
	SCW2	DPSP3008Z	SCREW, ×2	
	SPC1	PGZ00150	TR SPACER	
	TP1	PU54983	TEST PIN, ×17	
	CN1	PU58844-2	CONNECTOR	
	CN2	PU58844-2R	CONNECTOR	
	CN3	PU58844-5	CONNECTOR	
	CN4	PU58844-2R	CONNECTOR	
	CN5	PU58844-3Y	CONNECTOR	
	CN6	PU58844-4	CONNECTOR	
	CN7	PU58844-2	CONNECTOR	
	CN8	PU58844-2Y	CONNECTOR	
	CN9	PU58844-4	CONNECTOR	
	CN10	PU58844-2Y	CONNECTOR	
	CN11	PU58844-3	CONNECTOR	
	CN12	PU58798-10	CONNECTOR	
	CN13	PU58844-6	CONNECTOR	
	CN14	PU58844-5R	CONNECTOR	
	CN15	PU58844-5	CONNECTOR	
	CN17	PU58844-8	CONNECTOR	
	CN18	PU58844-2R	CONNECTOR	
	CN19	PU58844-4R	CONNECTOR	
	CN20	PU58844-7	CONNECTOR	

M.CTL/R.SERVO BOARD ASSEMBLY<31>

#⚠	REF No.	PART No.	PART NAME, DESCRIPTION
	PWBA	PRK10059B	M.CTL/R.SERVO BOARD ASSY
⚠	STK1	PRD30072-31	STICKER
⚠	STK2	PRD30072-32	STICKER
	IC1	PGD30241-10-4	IC
	or	PGD30241C-10-4	IC
	IC2	CXP80116-706Q	IC
	IC3	TC74HC00AF	IC
	IC4	M6M80011AP	IC
	IC5	TMP82C255AN-2	IC
	IC6	TA79L012P	IC
	IC7	M5278D05	IC
	IC8	TA78L012AP	IC
	IC9	TA8405S	IC
	IC10	BA10358F	IC
	IC11	BA10358F	IC
	IC12	BA10358F	IC
	IC13	NJM2068MD	IC
	IC17	TC4066BF	IC
	IC18	BA10358F	IC
	IC19	TC4526BF	IC
	IC20	TC4526BF	IC
	IC21	TC4013BF	IC
	IC22	BA6993F	IC
	IC23	BA6993F	IC
	IC24	NJM2068MD	IC
	IC25	NJM2068MD	IC
	IC26	NJM2068MD	IC
	IC27	NJM2068MD	IC
	IC28	BA6993F	IC
	IC29	AN3834K	IC
	IC30	AN3834K	IC
	IC31	BA222	IC
	IC33	M51957BL	IC
	IC34	M51957BL	IC
	Q1	2SB907	TRANSISTOR
	Q2	2SA1020(Y)	TRANSISTOR
	Q3	2SD1468S(SE)	TRANSISTOR
	Q4	2SA1020(Y)	TRANSISTOR
	Q5	DTC124ES	TRANSISTOR
	Q6	2SB1151(K)	TRANSISTOR
	Q7	2SD1468S(SE)	TRANSISTOR
	Q8	2SB1151(K)	TRANSISTOR
	Q9	2SD1468S(SE)	TRANSISTOR
	Q10	2SD1468S(SE)	TRANSISTOR
	Q11	2SD1276(PQ)	TRANSISTOR
	Q12	DTA124ES	TRANSISTOR
	Q13	DTC124ES	TRANSISTOR
	Q14	DTC124ES	TRANSISTOR
	Q15	DTC124ES	TRANSISTOR
	Q16	2SA1020(Y)	TRANSISTOR
	Q17	DTA124ES	TRANSISTOR
	Q18	DTA124ES	TRANSISTOR
	Q19	DTA124ES	TRANSISTOR
	Q21	DTC124ES	TRANSISTOR
	Q22	DTC124ES	TRANSISTOR
	Q23	2SB907	TRANSISTOR
	Q24	2SA1020(Y)	TRANSISTOR
	D2	1SS133	DIODE
	D3	1SS133	DIODE
	D4	RK14LF-B2	DIODE
	D5	1SS133	DIODE
	D6	1SS133	DIODE
	D7	1SS133	DIODE
	D8	1SS133	DIODE
	D9	1SS133	DIODE
	D10	1SS133	DIODE
	D11	1SS133	DIODE
	D12	1SS133	DIODE
	D13	1SS133	DIODE
	D14	11ES2	DIODE
	D15	RK14LF-B2	DIODE
	D16	RK14LF-B2	DIODE

#△	REF No.	PART No.	PART NAME,	DESCRIPTION
	D17	1SS133	DIODE	
	D19	1SS133	DIODE	
	D20	1SS133	DIODE	
	D21	1SS133	DIODE	
	D22	1SS133	DIODE	
	D23	1SS133	DIODE	
	D24	1SS133	DIODE	
	D25	RD5.1EB1	ZENER DIODE	
	D26	RD5.1EB1	ZENER DIODE	
	D27	RD5.1EB1	ZENER DIODE	
	D28	V03C	DIODE	
	R1	QRD161J-102	RESISTOR	1kΩ,1/6W
	R2	QRD161J-104	RESISTOR	100kΩ,1/6W
	R3	QRD161J-104	RESISTOR	100kΩ,1/6W
	R4	QRD161J-104	RESISTOR	100kΩ,1/6W
	R5	QRD161J-104	RESISTOR	100kΩ,1/6W
	R6	QRD161J-563	RESISTOR	56kΩ,1/6W
	R7	QRD161J-563	RESISTOR	56kΩ,1/6W
	R8	QRD161J-104	RESISTOR	100kΩ,1/6W
	R9	QRD161J-104	RESISTOR	100kΩ,1/6W
	R11	QRD161J-121	RESISTOR	120Ω,1/6W
	R12	QRD161J-121	RESISTOR	120Ω,1/6W
	R13	QRD161J-121	RESISTOR	120Ω,1/6W
	R14	QRD161J-121	RESISTOR	120Ω,1/6W
	R15	QRD161J-121	RESISTOR	120Ω,1/6W
	R16	QRD161J-121	RESISTOR	120Ω,1/6W
	R17	QRD161J-121	RESISTOR	120Ω,1/6W
	R18	QRD161J-472	RESISTOR	4.7kΩ,1/6W
	R19	QRD161J-472	RESISTOR	4.7kΩ,1/6W
	R20	QRD161J-121	RESISTOR	120Ω,1/6W
	R21	QRD161J-154	RESISTOR	150kΩ,1/6W
	R22	QRD161J-0R0	RESISTOR	0Ω,1/6W
	R23	QRD161J-0R0	RESISTOR	0Ω,1/6W
	R24	QRD161J-0R0	RESISTOR	0Ω,1/6W
	R25	QRD161J-121	RESISTOR	120Ω,1/6W
	R26	QRD161J-121	RESISTOR	120Ω,1/6W
	R27	QRD161J-0R0	RESISTOR	0Ω,1/6W
	R28	QRD161J-121	RESISTOR	120Ω,1/6W
	R29	QRD161J-0R0	RESISTOR	0Ω,1/6W
	R30	QRD161J-0R0	RESISTOR	0Ω,1/6W
	R31	QRD161J-0R0	RESISTOR	0Ω,1/6W
	R32	QRD161J-0R0	RESISTOR	0Ω,1/6W
	R33	QRD161J-0R0	RESISTOR	0Ω,1/6W
	R35	QRD161J-0R0	RESISTOR	0Ω,1/6W
	R36	QRD161J-103	RESISTOR	10kΩ,1/6W
	R37	QRD161J-103	RESISTOR	10kΩ,1/6W
	R38	QRD161J-103	RESISTOR	10kΩ,1/6W
	R39	QRD161J-103	RESISTOR	10kΩ,1/6W
	R40	QRD161J-103	RESISTOR	10kΩ,1/6W
	R41	QRD161J-103	RESISTOR	10kΩ,1/6W
	R42	QRD161J-103	RESISTOR	10kΩ,1/6W
	R43	QRD161J-104	RESISTOR	100kΩ,1/6W
	R44	QRD161J-104	RESISTOR	100kΩ,1/6W
	R45	QRD161J-104	RESISTOR	100kΩ,1/6W
	R46	QRD161J-104	RESISTOR	100kΩ,1/6W
	R47	QRD161J-103	RESISTOR	10kΩ,1/6W
	R48	QRD161J-103	RESISTOR	10kΩ,1/6W
	R49	QRD161J-103	RESISTOR	10kΩ,1/6W
	R50	QRD161J-103	RESISTOR	10kΩ,1/6W
	R51	QRD161J-103	RESISTOR	10kΩ,1/6W
	R52	QRD161J-472	RESISTOR	4.7kΩ,1/6W
	R53	QRD161J-472	RESISTOR	4.7kΩ,1/6W
	R54	QRD161J-472	RESISTOR	4.7kΩ,1/6W
	R55	QRD161J-472	RESISTOR	4.7kΩ,1/6W
	R56	QRD161J-472	RESISTOR	4.7kΩ,1/6W
	R57	QRD161J-104	RESISTOR	100kΩ,1/6W

#△	REF No.	PART No.	PART NAME,	DESCRIPTION
	R58	QRD161J-472	RESISTOR	4.7kΩ,1/6W
	R59	QRD161J-472	RESISTOR	4.7kΩ,1/6W
	R60	QRD161J-102	RESISTOR	1kΩ,1/6W
△	R61	QRG019J-561S	OMF RESISTOR	560Ω,1W
	R63	QRD161J-103	RESISTOR	10kΩ,1/6W
	R64	QRD161J-103	RESISTOR	10kΩ,1/6W
	R65	QRD161J-103	RESISTOR	10kΩ,1/6W
	R66	QRD161J-103	RESISTOR	10kΩ,1/6W
	R67	QRD161J-105	RESISTOR	1MΩ,1/6W
	R68	QRD161J-103	RESISTOR	10kΩ,1/6W
	R69	QRD161J-104	RESISTOR	100kΩ,1/6W
	R70	QRD161J-104	RESISTOR	100kΩ,1/6W
	R71	QRD161J-105	RESISTOR	1MΩ,1/6W
	R72	QRD161J-105	RESISTOR	1MΩ,1/6W
	R73	QRD161J-103	RESISTOR	10kΩ,1/6W
	R74	QRV141F-1003AY	CMF RESISTOR	100kΩ,1/4W
	R75	QRV141F-1002AY	CMF RESISTOR	10.0kΩ,1/4W
	R76	QRV141F-2213AY	CMF RESISTOR	221kΩ,1/4W
	R77	QRD161J-0R0	RESISTOR	0Ω,1/6W
	R78	QRD161J-103	RESISTOR	10kΩ,1/6W
	R79	QRV141F-2213AY	CMF RESISTOR	221kΩ,1/4W
	R80	QRV141F-1002AY	CMF RESISTOR	10.0kΩ,1/4W
	R81	QRV141F-1501AY	CMF RESISTOR	1.50kΩ,1/4W
	R93	QRD161J-563	RESISTOR	56kΩ,1/6W
	R94	QRD161J-563	RESISTOR	56kΩ,1/6W
	R95	QRD161J-104	RESISTOR	100kΩ,1/6W
	R96	QRD161J-104	RESISTOR	100kΩ,1/6W
	R97	QRD161J-103	RESISTOR	10kΩ,1/6W
	R98	QRD161J-103	RESISTOR	10kΩ,1/6W
	R99	PU52108-330K	POSITIVE THERMISTOR	
	R100	PU52108-220K	POSITIVE THERMISTOR	
	R101	QRD161J-222	RESISTOR	2.2kΩ,1/6W
	R102	QRD161J-222	RESISTOR	2.2kΩ,1/6W
	R103	QRD161J-222	RESISTOR	2.2kΩ,1/6W
	R104	QRD161J-222	RESISTOR	2.2kΩ,1/6W
	R105	QRD161J-223	RESISTOR	22kΩ,1/6W
	R106	QRD161J-223	RESISTOR	22kΩ,1/6W
	R107	QRD161J-223	RESISTOR	22kΩ,1/6W
	R108	QRD161J-223	RESISTOR	22kΩ,1/6W
	R109	QRD161J-102	RESISTOR	1kΩ,1/6W
	R110	QRD161J-102	RESISTOR	1kΩ,1/6W
	R111	QRD161J-102	RESISTOR	1kΩ,1/6W
	R112	QRD161J-102	RESISTOR	1kΩ,1/6W
	R113	QRD161J-102	RESISTOR	1kΩ,1/6W
	R114	QRD161J-102	RESISTOR	1kΩ,1/6W
	R115	QRD161J-102	RESISTOR	1kΩ,1/6W
	R116	QRD161J-102	RESISTOR	1kΩ,1/6W
	R117	QRD161J-333	RESISTOR	33kΩ,1/6W
	R118	QRD161J-474	RESISTOR	470kΩ,1/6W
	R119	QRD161J-333	RESISTOR	33kΩ,1/6W
	R120	QRD161J-474	RESISTOR	470kΩ,1/6W
	R121	QRD161J-102	RESISTOR	1kΩ,1/6W
	R122	QRD161J-473	RESISTOR	47kΩ,1/6W
	R123	QRD161J-102	RESISTOR	1kΩ,1/6W
	R124	QRD161J-473	RESISTOR	47kΩ,1/6W
	R125	QRD161J-103	RESISTOR	10kΩ,1/6W
	R126	QRD161J-103	RESISTOR	10kΩ,1/6W
	R127	QRV141F-4301AY	RESISTOR	4.30kΩ,1/4W
	R128	QRD161J-223	RESISTOR	22kΩ,1/6W
△	R129	QRX029J-R56A	MF RESISTOR	0.56Ω,2W
	R130	QRD161J-221	RESISTOR	220Ω,1/6W
	R131	QRD161J-221	RESISTOR	220Ω,1/6W
	R132	QRV141F-4301AY	RESISTOR	4.30kΩ,1/4W
	R133	QRD161J-223	RESISTOR	22kΩ,1/6W
△	R134	QRX029J-R56A	MF RESISTOR	0.56Ω,2W
	R135	QRD161J-221	RESISTOR	220Ω,1/6W

#⚠	REF No.	PART No.	PART NAME,	DESCRIPTION
	R136	QRD161J-221	RESISTOR	220Ω,1/6W
	R137	QRD161J-331	RESISTOR	330Ω,1/6W
	R138	QRD161J-472	RESISTOR	4.7kΩ,1/6W
	R139	QRD161J-102	RESISTOR	1kΩ,1/6W
	R140	QRD161J-472	RESISTOR	4.7kΩ,1/6W
	R141	QRD161J-472	RESISTOR	4.7kΩ,1/6W
	R142	QRD161J-472	RESISTOR	4.7kΩ,1/6W
⚠	R143	QRG029J-560A	OMF RESISTOR	56Ω,2W
	R144	QRD161J-221	RESISTOR	220Ω,1/6W
	R145	QRD161J-221	RESISTOR	220Ω,1/6W
⚠	R146	QRG019J-561S	OMF RESISTOR	560Ω,1W
⚠	R147	QRG019J-561S	OMF RESISTOR	560Ω,1W
	R148	QRD161J-102	RESISTOR	1kΩ,1/6W
	R149	QRD161J-102	RESISTOR	1kΩ,1/6W
	R150	QRD161J-104	RESISTOR	100kΩ,1/6W
	R151	QRD161J-104	RESISTOR	100kΩ,1/6W
	R152	QRD161J-102	RESISTOR	1kΩ,1/6W
	R153	QRD161J-102	RESISTOR	1kΩ,1/6W
	R154	QRD161J-472	RESISTOR	4.7kΩ,1/6W
	R155	QRD161J-121	RESISTOR	120Ω,1/6W
	R156	QRD161J-103	RESISTOR	10kΩ,1/6W
	R157	QRD161J-222	RESISTOR	2.2kΩ,1/6W
	R158	QRD161J-473	RESISTOR	47kΩ,1/6W
	R159	QRD161J-223	RESISTOR	22kΩ,1/6W
	R160	QRD161J-104	RESISTOR	100kΩ,1/6W
	R161	QRD161J-103	RESISTOR	10kΩ,1/6W
	R164	QRD161J-103	RESISTOR	10kΩ,1/6W
	R165	QRD161J-104	RESISTOR	100kΩ,1/6W
	R166	QRD161J-103	RESISTOR	10kΩ,1/6W
	R167	QRD161J-103	RESISTOR	10kΩ,1/6W
	R168	QRD161J-103	RESISTOR	10kΩ,1/6W
	R169	QRD161J-103	RESISTOR	10kΩ,1/6W
	R170	QRD161J-104	RESISTOR	100kΩ,1/6W
	R171	QRD161J-104	RESISTOR	100kΩ,1/6W
	R172	QRD161J-104	RESISTOR	100kΩ,1/6W
	R173	QRD161J-104	RESISTOR	100kΩ,1/6W
	R174	QRD161J-104	RESISTOR	100kΩ,1/6W
	R175	QRD161J-103	RESISTOR	10kΩ,1/6W
	R181	QRD161J-0R0	RESISTOR	0Ω,1/6W
	R182	QRD161J-472	RESISTOR	4.7kΩ,1/6W
	R183	QRD161J-472	RESISTOR	4.7kΩ,1/6W
	R184	QRD161J-472	RESISTOR	4.7kΩ,1/6W
	R185	QRD161J-472	RESISTOR	4.7kΩ,1/6W
	R186	QRD161J-472	RESISTOR	4.7kΩ,1/6W
	R187	QRD161J-104	RESISTOR	100kΩ,1/6W
	R189	QRD161J-104	RESISTOR	100kΩ,1/6W
	R190	QRD161J-104	RESISTOR	100kΩ,1/6W
	R191	QRD161J-103	RESISTOR	10kΩ,1/6W
	R201	PU55509-472	V RESISTOR	
	R202	PU55509-472	V RESISTOR	
	R203	PU55509-472	V RESISTOR	
	R204	PU55509-472	V RESISTOR	
	R206	PU55509-102	V RESISTOR	
	R207	PU55509-223	V RESISTOR	
	C1	QETC1AM-107	E CAPACITOR	100μF,10V
	C2	QCFA1EZ-104	CAPACITOR	0.1μF,25V
	C3	QCFA1EZ-104	CAPACITOR	0.1μF,25V
	C4	QETC1HM-106	E CAPACITOR	10μF,50V
	C5	QCFA1EZ-104	CAPACITOR	0.1μF,25V
	C6	QCTA1CH-120	CAPACITOR	12pF,16V
	C7	QCTA1CH-120	CAPACITOR	12pF,16V
	C8	QCYA1HK-103	CAPACITOR	0.01μF,50V
	C9	QCYA1HK-103	CAPACITOR	0.01μF,50V
	C10	QCFA1EZ-104	CAPACITOR	0.1μF,25V

#⚠	REF No.	PART No.	PART NAME,	DESCRIPTION
	C11	QCYA1HK-103	CAPACITOR	0.01μF,50V
	C12	QCYA1HK-103	CAPACITOR	0.01μF,50V
	C13	QCYA1HK-103	CAPACITOR	0.01μF,50V
	C14	QCFA1EZ-104	CAPACITOR	0.1μF,25V
	C15	QCFA1EZ-104	CAPACITOR	0.1μF,25V
	C16	QCFA1EZ-104	CAPACITOR	0.1μF,25V
	C17	QETC1EM-476	E CAPACITOR	47μF,25V
	C18	QCFA1EZ-104	CAPACITOR	0.1μF,25V
	C19	QCFA1EZ-104	CAPACITOR	0.1μF,25V
	C20	QETC1EM-107	E CAPACITOR	100μF,25V
	C21	QETC1EM-107	E CAPACITOR	100μF,25V
	C22	QCFA1EZ-104	CAPACITOR	0.1μF,25V
	C23	QCFA1EZ-104	CAPACITOR	0.1μF,25V
	C24	QETC1AM-227	E CAPACITOR	220μF,10V
	C25	QETC1EM-476	E CAPACITOR	47μF,25V
	C26	QCFA1EZ-104	CAPACITOR	0.1μF,25V
	C27	QCFA1EZ-104	CAPACITOR	0.1μF,25V
	C28	QETC1EM-107	E CAPACITOR	100μF,25V
	C29	QCFA1EZ-104	CAPACITOR	0.1μF,25V
	C30	QETC1EM-227	E CAPACITOR	220μF,25V
	C31	QETC1HM-106	E CAPACITOR	10μF,50V
	C32	QETC1EM-227	E CAPACITOR	220μF,25V
	C33	QCFA1EZ-104	CAPACITOR	0.1μF,25V
	C34	QCFA1EZ-104	CAPACITOR	0.1μF,25V
	C35	QEZ0138-108	E CAPACITOR	1000μF
	C37	QCFA1EZ-104	CAPACITOR	0.1μF,25V
	C38	QETC1HM-106	E CAPACITOR	10μF,50V
	C39	QCFA1EZ-104	CAPACITOR	0.1μF,25V
	C42	QCFA1EZ-104	CAPACITOR	0.1μF,25V
	C43	QETC1EM-476	E CAPACITOR	47μF,25V
	C44	QCFA1EZ-104	CAPACITOR	0.1μF,25V
	C45	QETC1EM-476	E CAPACITOR	47μF,25V
	C46	QCFA1EZ-104	CAPACITOR	0.1μF,25V
	C47	QCFA1EZ-104	CAPACITOR	0.1μF,25V
	C48	QCFA1EZ-104	CAPACITOR	0.1μF,25V
	C49	QFN31HJ-104	M CAPACITOR	0.1μF,50V
	C50	QCFA1EZ-104	CAPACITOR	0.1μF,25V
	C58	QCFA1EZ-104	CAPACITOR	0.1μF,25V
	C59	QCFA1EZ-104	CAPACITOR	0.1μF,25V
	C60	QCFA1EZ-104	CAPACITOR	0.1μF,25V
	C61	QCYA1HJ-153	CAPACITOR	0.015μF,50V
	C62	QCYA1HJ-153	CAPACITOR	0.015μF,50V
	C63	QCYA1HJ-473	CAPACITOR	0.047μF,50V
	C64	QCYA1HJ-473	CAPACITOR	0.047μF,50V
	C65	QCFA1EZ-104	CAPACITOR	0.1μF,25V
	C66	QETC1EM-227	E CAPACITOR	220μF,25V
	C67	QCFA1EZ-104	CAPACITOR	0.1μF,25V
	C68	QCFA1EZ-104	CAPACITOR	0.1μF,25V
	C69	QCFA1EZ-104	CAPACITOR	0.1μF,25V
	C70	QETC1HM-106	E CAPACITOR	10μF,50V
	C71	QCFA1EZ-104	CAPACITOR	0.1μF,25V
	C72	QCFA1EZ-104	CAPACITOR	0.1μF,25V
	C73	QCFA1EZ-104	CAPACITOR	0.1μF,25V
	C74	QCTA1CH-680	CAPACITOR	68pF,16V
	C75	QCTA1CH-7R0	CAPACITOR	7pF,16V
	C76	QCTA1CH-680	CAPACITOR	68pF,16V
	C77	QCTA1CH-7R0	CAPACITOR	7pF,16V
	C78	QCFA1EZ-104	CAPACITOR	0.1μF,25V
	C79	QCFA1EZ-104	CAPACITOR	0.1μF,25V
	C80	QCFA1EZ-104	CAPACITOR	0.1μF,25V
	C81	QCFA1EZ-104	CAPACITOR	0.1μF,25V
	C82	QCFA1EZ-104	CAPACITOR	0.1μF,25V
	C83	QCFA1EZ-104	CAPACITOR	0.1μF,25V
	C84	QCFA1EZ-104	CAPACITOR	0.1μF,25V
	C85	QCFA1EZ-104	CAPACITOR	0.1μF,25V
	C86	QETC1EM-107	E CAPACITOR	100μF,25V
	C87	QCFA1EZ-104	CAPACITOR	0.1μF,25V

<31><40>

#⚠	REF No.	PART No.	PART NAME,	DESCRIPTION
	C88	QETC1EM-227	E CAPACITOR	220µF,25V
	C89	QCFA1EZ-104	CAPACITOR	0.1µF,25V
	C90	QETC1AM-107	E CAPACITOR	100µF,10V
	C91	QETC1EM-476	E CAPACITOR	47µF,25V
	C92	QFV71HJ-104	TF CAPACITOR	0.1µF,50V
	C93	QCFA1EZ-104	CAPACITOR	0.1µF,25V
	C94	QFV71HJ-104	TF CAPACITOR	0.1µF,50V
	C96	QFV71HJ-154	TF CAPACITOR	0.15µF,50V
	C97	QFV71HJ-154	TF CAPACITOR	0.15µF,50V
	C98	QFV71HJ-154	TF CAPACITOR	0.15µF,50V
	C99	QFV71HJ-104	TF CAPACITOR	0.1µF,50V
	C100	QETC1HM-475	E CAPACITOR	4.7µF,50V
	C101	QETC1HM-475	E CAPACITOR	4.7µF,50V
	C102	QETC1HM-475	E CAPACITOR	4.7µF,50V
	C103	QCYA1HK-472	CAPACITOR	0.0047µF,50V
	C104	QCYA1HK-472	CAPACITOR	0.0047µF,50V
	C105	QCYA1HK-472	CAPACITOR	0.0047µF,50V
	C106	QETC1AM-107	E CAPACITOR	100µF,10V
	C107	QCFA1EZ-104	CAPACITOR	0.1µF,25V
	C108	QETC1EM-476	E CAPACITOR	47µF,25V
	C109	QFV71HJ-104	TF CAPACITOR	0.1µF,50V
	C110	QCFA1EZ-104	CAPACITOR	0.1µF,25V
	C111	QFV71HJ-104	TF CAPACITOR	0.1µF,50V
	C113	QFV71HJ-154	TF CAPACITOR	0.15µF,50V
	C114	QFV71HJ-154	TF CAPACITOR	0.15µF,50V
	C115	QFV71HJ-154	TF CAPACITOR	0.15µF,50V
	C116	QFV71HJ-104	TF CAPACITOR	0.1µF,50V
	C117	QETC1HM-475	E CAPACITOR	4.7µF,50V
	C118	QETC1HM-475	E CAPACITOR	4.7µF,50V
	C119	QETC1HM-475	E CAPACITOR	4.7µF,50V
	C120	QCYA1HK-472	CAPACITOR	0.0047µF,50V
	C121	QCYA1HK-472	CAPACITOR	0.0047µF,50V
	C122	QCYA1HK-472	CAPACITOR	0.0047µF,50V
	C123	QCFA1EZ-104	CAPACITOR	0.1µF,25V
	C124	QETC1EM-477	E CAPACITOR	470µF,25V
	C125	QETC1EM-477	E CAPACITOR	470µF,25V
	C126	QETC1EM-477	E CAPACITOR	470µF,25V
	C127	QEZ0139-337	E CAPACITOR	330µF
	C128	QEZ0139-337	E CAPACITOR	330µF
	C129	QETC1HM-106	E CAPACITOR	10µF,50V
	C130	QETC1HM-106	E CAPACITOR	10µF,50V
	C131	QCFA1EZ-104	CAPACITOR	0.1µF,25V
	C132	QCFA1EZ-104	CAPACITOR	0.1µF,25V
	C133	QFN31HJ-103	M CAPACITOR	0.01µF,50V
	C134	QCFA1EZ-104	CAPACITOR	0.1µF,25V
	C135	QCFA1EZ-104	CAPACITOR	0.1µF,25V
	C139	QFN31HJ-104	M CAPACITOR	0.1µF,50V
	C140	QFN31HJ-104	M CAPACITOR	0.1µF,50V
	C141	QCYA1HK-102	CAPACITOR	0.001µF,50V
	C142	QCYA1HK-102	CAPACITOR	0.001µF,50V
	C145	QETC1HM-474	E CAPACITOR	0.47µF,50V
	C146	QETC1HM-474	E CAPACITOR	0.47µF,50V
	C147	QETC1HM-475	E CAPACITOR	4.7µF,50V
	C148	QCFA1EZ-104	CAPACITOR	0.1µF,25V
	C149	QCFA1EZ-104	CAPACITOR	0.1µF,25V
	C150	QCFA1EZ-104	CAPACITOR	0.1µF,25V
	C151	QCFA1EZ-104	CAPACITOR	0.1µF,25V
	C152	QCF11HP-103	CAPACITOR	0.01µF,50V
	L1	PU48530-271J	COIL	270µH
	L2	PU48530-271J	COIL	270µH
	L3	PU50277	COIL	
	L4	PU50277	COIL	
	L5	PGZ00253-241	COIL	
	L7	PU48530-271J	COIL	270µH
	L9	PU48530-271J	COIL	270µH

#⚠	REF No.	PART No.	PART NAME,	DESCRIPTION
	L10	PU48530-271J	COIL	270µH
	L13	PU48530-271J	COIL	270µH
	L14	PU48530-271J	COIL	270µH
	L15	PU48530-271J	COIL	270µH
	L16	PU50277	COIL	
	L17	PU50277	COIL	
	L18	PU50277	COIL	
	L19	PU50755	COIL	
	L20	PU50755	COIL	
	L22	PU50277	COIL	
⚠	X1	PGZ00067-02	CRYSTAL RESONATOR	
	SW1	QSL0015-L04	DIP SW	
	SW2	PU57551	TACT SWITCH	
⚠	K1	PGZ00354	FERRATE BEADS	
⚠	K2	PGZ00354	FERRATE BEADS	
	TH1	QRD161J-0R0	RESISTOR	0Ω,1/6W
	TH2	QRD161J-0R0	RESISTOR	0Ω,1/6W
	CL1	PGZ01377-03	STYLE PIN, ×3	
	HS1	PRD43592	HEAT SINK, ×2	
	SCW1	SPSP3008Z	SCREW, ×4	
	SKT1	PGZ00331-028	IC SOCKET	
	TP1	PU54983	TEST PIN, ×7	
	CN1	PU58844-8	CONNECTOR	
	CN2	PU58844-11	CONNECTOR	
	CN3	PU58844-7	CONNECTOR	
	CN4	PU58844-9	CONNECTOR	
	CN5	PU58844-10	CONNECTOR	
	CN6	PU58844-3	CONNECTOR	
	CN7	PU58844-10R	CONNECTOR	
	CN8	PU58844-3R	CONNECTOR	
	CN9	PU58844-5	CONNECTOR	
	CN10	PU58798-10	CONNECTOR	
	CN11	PU58844-4	CONNECTOR	
	CN12	PU58844-4R	CONNECTOR	
	CN13	PU58844-5	CONNECTOR	
	CN14	PU58844-3	CONNECTOR	
⚠	CP1	ICP-F10	CIRCUIT PROTECTOR	
⚠	CP2	ICP-F10	CIRCUIT PROTECTOR	

SYSCON BOARD ASSEMBLY<40>

#⚠	REF No.	PART No.	PART NAME,	DESCRIPTION
	PWBA	PGE10152B-02	SYSCON BOARD ASSY	
	IC1	HD64180ZF8	IC	

#⚠REF No.	PART No.	PART NAME,	DESCRIPTION
IC2	PGD30620-2-2	IC	
or	PGD30620C-2-2	IC	
IC3	TC5564APL-15	IC	
IC5	TMPZ84C30AP-6	IC	
IC6	TMPZ84C30AP-6	IC	
IC7	TMP82C255AN-2	IC	
IC8	TMP82C55AF-2	IC	
IC9	TMP91C640N-2381	IC	
IC10	VC2054	IC	
IC11	TC74HC138AP	IC	
IC12	TC74HC138AP	IC	
IC13	TC74HC32AP	IC	
IC14	TC74HC32AP	IC	
IC15	TC74HC08AP	IC	
IC16	TC74HC11AP	IC	
IC17	TC74HC245AP	IC	
IC18	TC74HC541AP	IC	
IC19	TC74HC541AP	IC	
IC20	TC74HC244AP	IC	
IC21	TC74HC74AP	IC	
IC22	TC74HC74AP	IC	
IC23	TC74HC126AP	IC	
IC24	TC74HC14AP	IC	
IC25	TC74HC4020AP	IC	
IC26	TC74HC126AP	IC	
IC27	MC34051P	IC	
IC28	M51957BL	IC	
IC29	M51957BL	IC	
IC30	TC74HC74AP	IC	
IC31	M5278D05	IC	
IC32	M5278D05	IC	
IC33	TC74HC32AP	IC	
IC34	TC7W08F	IC	
R1	QRD167J-103	RESISTOR	10kΩ,1/6W
R2	QRD167J-103	RESISTOR	10kΩ,1/6W
R3	QRD167J-103	RESISTOR	10kΩ,1/6W
R4	QRD167J-103	RESISTOR	10kΩ,1/6W
R5	QRD167J-0R0	RESISTOR	0Ω,1/6W
R6	QRD167J-0R0	RESISTOR	0Ω,1/6W
R7	QRD167J-333	RESISTOR	33kΩ,1/6W
R8	QRD167J-333	RESISTOR	33kΩ,1/6W
R9	QRD167J-101	RESISTOR	100Ω,1/6W
R10	QRD167J-101	RESISTOR	100Ω,1/6W
R11	QRD167J-101	RESISTOR	100Ω,1/6W
R12	QRD167J-101	RESISTOR	100Ω,1/6W
R13	QRD167J-101	RESISTOR	100Ω,1/6W
R14	QRD167J-101	RESISTOR	100Ω,1/6W
R15	QRD167J-101	RESISTOR	100Ω,1/6W
R16	QRD167J-103	RESISTOR	10kΩ,1/6W
R17	QRD167J-563	RESISTOR	56kΩ,1/6W
R18	QRD167J-223	RESISTOR	22kΩ,1/6W
R19	QRD167J-104	RESISTOR	100kΩ,1/6W
R20	QRV147F-1103A	RESISTOR	110kΩ,1/4W
R21	QRV147F-1002A	RESISTOR	10.0kΩ,1/4W
R22	QRD167J-104	RESISTOR	100kΩ,1/6W
R23	QRD167J-102	RESISTOR	1kΩ,1/6W
R24	QRD167J-102	RESISTOR	1kΩ,1/6W
R25	QRD167J-102	RESISTOR	1kΩ,1/6W
R26	QRD167J-103	RESISTOR	10kΩ,1/6W
R27	QRD167J-103	RESISTOR	10kΩ,1/6W
R28	QRD167J-102	RESISTOR	1kΩ,1/6W
R29	QRD167J-102	RESISTOR	1kΩ,1/6W
R30	QRD167J-101	RESISTOR	100Ω,1/6W
R31	QRD167J-103	RESISTOR	10kΩ,1/6W
R32	QRD167J-103	RESISTOR	10kΩ,1/6W
R33	QRD167J-102	RESISTOR	1kΩ,1/6W

#⚠REF No.	PART No.	PART NAME,	DESCRIPTION
R34	QRD167J-102	RESISTOR	1kΩ,1/6W
R35	QRD167J-101	RESISTOR	100Ω,1/6W
R36	QRD167J-333	RESISTOR	33kΩ,1/6W
R37	QRD167J-333	RESISTOR	33kΩ,1/6W
R38	QRD167J-100	RESISTOR	10Ω,1/6W
RA1	QRB08AJ-103	NETWORK RESISTOR	10kΩ,8W
RA2	QRB08AJ-103	NETWORK RESISTOR	10kΩ,8W
RA3	EXB-P88103M	NETWORK RESISTOR	
RA4	EXB-P88103M	NETWORK RESISTOR	
RA5	QRB08AJ-103	NETWORK RESISTOR	10kΩ,8W
RA6	EXB-P84223M	RESISTOR ARRAY	
RA7	QRB08AJ-103	NETWORK RESISTOR	10kΩ,8W
RA8	QRB08AJ-103	NETWORK RESISTOR	10kΩ,8W
RA9	EXB-P88473M	RESISTOR ARRAY	
RA10	QRB08AJ-103	NETWORK RESISTOR	10kΩ,8W
C1	QETA1EM-476	E CAPACITOR	47μF,25V
C2	QETA1EM-107	E CAPACITOR	100μF,25V
C3	QETA1EM-107	E CAPACITOR	100μF,25V
C4	QCC11CJ-104	CAPACITOR	0.1μF,16V
C5	QCC11CJ-104	CAPACITOR	0.1μF,16V
C6	QCC11CJ-104	CAPACITOR	0.1μF,16V
C7	QETA1EM-476	E CAPACITOR	47μF,25V
C8	QCC11CJ-104	CAPACITOR	0.1μF,16V
C9	QCS11HJ-220	CAPACITOR	22pF,50V
C10	QCS11HJ-220	CAPACITOR	22pF,50V
C11	QCS11HJ-180	CAPACITOR	18pF,50V
C12	QCS11HJ-180	CAPACITOR	18pF,50V
C13	QETA1HM-105	E CAPACITOR	1μF,50V
C14	QETA1HM-105	E CAPACITOR	1μF,50V
C15	QCS11HJ-220	CAPACITOR	22pF,50V
C16	QCS11HJ-220	CAPACITOR	22pF,50V
C17	QCS11HJ-220	CAPACITOR	22pF,50V
C19	QCS11HJ-220	CAPACITOR	22pF,50V
C20	QCS11HJ-220	CAPACITOR	22pF,50V
C21	QCS11HJ-220	CAPACITOR	22pF,50V
C22	QCS11HJ-220	CAPACITOR	22pF,50V
C23	QCC11CJ-104	CAPACITOR	0.1μF,16V
C24	QETA1EM-107	E CAPACITOR	100μF,25V
C25	QETA1EM-107	E CAPACITOR	100μF,25V
C26	QCC11CJ-104	CAPACITOR	0.1μF,16V
C27	QCF11HP-102	CAPACITOR	0.001μF,50V
C28	QCS11HJ-470	CAPACITOR	47pF,50V
C29	QCF11HP-103	CAPACITOR	0.01μF,50V
C30	QCF11HP-103	CAPACITOR	0.01μF,50V
C51	QCZ0208-104	CAPACITOR	0.1μF
C52	QCC11CJ-104	CAPACITOR	0.1μF,16V
C53	QCC11CJ-104	CAPACITOR	0.1μF,16V
C55	QCC11CJ-104	CAPACITOR	0.1μF,16V
C56	QCC11CJ-104	CAPACITOR	0.1μF,16V
C57	QCC11CJ-104	CAPACITOR	0.1μF,16V
C58	QCC11CJ-104	CAPACITOR	0.1μF,16V
C59	QCC11CJ-104	CAPACITOR	0.1μF,16V
C60	QCC11CJ-104	CAPACITOR	0.1μF,16V
C61	QCC11CJ-104	CAPACITOR	0.1μF,16V
C62	QCC11CJ-104	CAPACITOR	0.1μF,16V
C63	QCC11CJ-104	CAPACITOR	0.1μF,16V
C64	QCC11CJ-104	CAPACITOR	0.1μF,16V
C65	QCC11CJ-104	CAPACITOR	0.1μF,16V
C66	QCC11CJ-104	CAPACITOR	0.1μF,16V
C67	QCC11CJ-104	CAPACITOR	0.1μF,16V
C68	QCC11CJ-104	CAPACITOR	0.1μF,16V
C69	QCC11CJ-104	CAPACITOR	0.1μF,16V
C70	QCC11CJ-104	CAPACITOR	0.1μF,16V
C71	QCC11CJ-104	CAPACITOR	0.1μF,16V
C72	QCC11CJ-104	CAPACITOR	0.1μF,16V

<40><41>

#⚠	REF No.	PART No.	PART NAME, DESCRIPTION	
	C73	QCZ0208-104	CAPACITOR	0.1μF
	C74	QCC11CJ-104	CAPACITOR	0.1μF,16V
	C75	QCC11CJ-104	CAPACITOR	0.1μF,16V
	C76	QCC11CJ-104	CAPACITOR	0.1μF,16V
	C77	QCC11CJ-104	CAPACITOR	0.1μF,16V
	C78	QCC11CJ-104	CAPACITOR	0.1μF,16V
	C79	QCC11CJ-104	CAPACITOR	0.1μF,16V
	C80	QCC11CJ-104	CAPACITOR	0.1μF,16V
	C83	QCC11CJ-104	CAPACITOR	0.1μF,16V
	L1	PGZ00617-221	COIL	
	L2	PGZ00617-221	COIL	
⚠	X1	PGZ00513	CERAMIC FILTER	
⚠	X2	PGZ01561	CRYSTAL RESONATOR	
⚠	K1	PGZ00354	FERRATE BEADS, ×4	
	BKT1	PRD30766-01-02	SLOT COVER	
	EJ1	PGZ00582	EJECTOR, ×2	
	RV1	PU53276	PLASTIC RIVET, ×4	
	SKT1	PGZ00331-028	IC SOCKET	
	SKT2	PGZ01428-064	IC SOCKET	
	SLD1	PRD30781-03-05	SHIELD PLATE	
	TP1	PU54983	TEST PIN, ×19	
	CN1	PGZ00421-44	MALE CONNECTOR	
	CN2	PGZ00421-44	MALE CONNECTOR	
	CN3	PGZ01518-100	HALF PITCH CONNECTOR	

AVM／OS BOARD ASSY<41>

#⚠	REF No.	PART No.	PART NAME, DESCRIPTION	
	PWBA	PRK20089B	AVM／ONSC BOARD ASSY	
	STK1	PRD30072-57	STICKER	
	IC2	TC74HC4066AP	IC	
	IC3	NJM2233BD	IC	
	IC4	M50554-263SP	IC	
	IC5	M52684AP	IC	
	IC6	NJM2233BD	IC	
	IC7	M52684AP	IC	
	IC9	UPC319C	IC	
	IC10	TC74HC00AP	IC	
	IC11	TC4013BP	IC	
	IC12	M51957BL	IC	
	IC13	UPD75P116CW-309	IC	
	IC14	M54519P	IC	
	IC15	M54519P	IC	
	IC17	TC74HC00AP	IC	
	IC18	M5278D12	IC	
	IC19	M5278L05	IC	
	IC20	UPC78N05	IC	
	Q1	2SC1740S(QRS)	TRANSISTOR	
	Q2	2SA933S(RS)	TRANSISTOR	
	Q3	2SA933S(RS)	TRANSISTOR	
	Q4	2SC1740S(QRS)	TRANSISTOR	
	Q5	2SC1740S(QRS)	TRANSISTOR	
	Q6	2SC1740S(QRS)	TRANSISTOR	
	Q7	2SC1740S(QRS)	TRANSISTOR	
	Q8	2SC1740S(QRS)	TRANSISTOR	
	Q9	2SA933S(RS)	TRANSISTOR	
	Q10	2SA933S(RS)	TRANSISTOR	
	Q11	2SC1740S(QRS)	TRANSISTOR	
	Q12	2SC1740S(QRS)	TRANSISTOR	
	Q13	2SA933S(RS)	TRANSISTOR	
	Q14	2SA933S(RS)	TRANSISTOR	
	Q15	2SA933S(RS)	TRANSISTOR	
	Q16	2SC1740S(QRS)	TRANSISTOR	
	Q17	2SC1740S(QRS)	TRANSISTOR	
	Q18	2SC1740S(QRS)	TRANSISTOR	
	Q19	2SC1740S(QRS)	TRANSISTOR	
	Q20	2SC1740S(QRS)	TRANSISTOR	
	Q21	2SC1740S(QRS)	TRANSISTOR	
	Q22	2SC1740S(QRS)	TRANSISTOR	
	D1	1SS133	DIODE	
	D2	1SS133	DIODE	
	D3	1SS133	DIODE	
	D5	MA27TB	DIODE	
	D6	1SS133	DIODE	
	D7	1SS133	DIODE	
	D8	1SS133	DIODE	
	D9	1SS133	DIODE	
	D10	1SS133	DIODE	
	D11	RD7.5EB2	ZENER DIODE	
	R2	QRD161J-333	RESISTOR	33kΩ,1／6W
	R3	QRD161J-123	RESISTOR	12kΩ,1／6W
	R4	QRD161J-181	RESISTOR	180Ω,1／6W
	R5	QRV141F-5600AY	CMF RESISTOR	560Ω,1／4W
	R6	QRV141F-3300AY	CMF RESISTOR	330Ω,1／4W
	R7	QRV141F-3000AY	CMF RESISTOR	300Ω,1／4W
	R8	QRV141F-4420AY	CMF RESISTOR	442Ω,1／4W
	R9	QRD161J-182	RESISTOR	1.8kΩ,1／6W
	R10	QRD161J-222	RESISTOR	2.2kΩ,1／6W
	R11	QRD161J-152	RESISTOR	1.5kΩ,1／6W
	R12	QRD161J-561	RESISTOR	560Ω,1／6W
	R13	QRD161J-561	RESISTOR	560Ω,1／6W
	R16	QRD161J-102	RESISTOR	1kΩ,1／6W
	R17	QRD161J-561	RESISTOR	560Ω,1／6W
	R18	QRD161J-332	RESISTOR	3.3kΩ,1／6W
	R19	QRD161J-472	RESISTOR	4.7kΩ,1／6W
	R20	QRD161J-332	RESISTOR	3.3kΩ,1／6W
	R21	QRD161J-391	RESISTOR	390Ω,1／6W
	R22	QRD161J-102	RESISTOR	1kΩ,1／6W
	R23	QRD161J-681	RESISTOR	680Ω,1／6W
	R24	QRD161J-102	RESISTOR	1kΩ,1／6W
	R25	QRD161J-103	RESISTOR	10kΩ,1／6W
	R26	QRD161J-221	RESISTOR	220Ω,1／6W
	R27	QRD161J-103	RESISTOR	10kΩ,1／6W
	R28	QRD161J-102	RESISTOR	1kΩ,1／6W
	R29	QRD161J-681	RESISTOR	680Ω,1／6W
	R30	QRD161J-471	RESISTOR	470Ω,1／6W

#⚠	REF No.	PART No.	PART NAME,	DESCRIPTION
	R32	QRD161J-472	RESISTOR	4.7kΩ,1/6W
	R34	QRD161J-122	RESISTOR	1.2kΩ,1/6W
	R35	QRD161J-102	RESISTOR	1kΩ,1/6W
	R36	QRD161J-102	RESISTOR	1kΩ,1/6W
	R37	QRD161J-681	RESISTOR	680Ω,1/6W
	R38	QRD161J-561	RESISTOR	560Ω,1/6W
	R39	QRD161J-393	RESISTOR	39kΩ,1/6W
	R40	QRD161J-152	RESISTOR	1.5kΩ,1/6W
	R41	QRD161J-271	RESISTOR	270Ω,1/6W
	R42	QRD161J-103	RESISTOR	10kΩ,1/6W
	R43	QRD161J-222	RESISTOR	2.2kΩ,1/6W
	R44	QRD161J-223	RESISTOR	22kΩ,1/6W
	R45	QRD161J-273	RESISTOR	27kΩ,1/6W
	R46	QRD161J-222	RESISTOR	2.2kΩ,1/6W
	R47	QRD161J-222	RESISTOR	2.2kΩ,1/6W
	R48	QRD161J-222	RESISTOR	2.2kΩ,1/6W
	R49	QRD161J-122	RESISTOR	1.2kΩ,1/6W
	R50	QRD161J-122	RESISTOR	1.2kΩ,1/6W
	R51	QRD161J-101	RESISTOR	100Ω,1/6W
	R52	QRD161J-222	RESISTOR	2.2kΩ,1/6W
	R53	QRD161J-183	RESISTOR	18kΩ,1/6W
	R54	QRD161J-472	RESISTOR	4.7kΩ,1/6W
	R55	QRD161J-391	RESISTOR	390Ω,1/6W
	R56	QRD161J-473	RESISTOR	47kΩ,1/6W
	R57	QRD161J-0R0	RESISTOR	0Ω,1/6W
	R58	QRD161J-103	RESISTOR	10kΩ,1/6W
	R59	QRD161J-561	RESISTOR	560Ω,1/6W
	R60	QRD161J-561	RESISTOR	560Ω,1/6W
	R61	QRD161J-181	RESISTOR	180Ω,1/6W
	R62	QRD161J-223	RESISTOR	22kΩ,1/6W
	R63	QRD161J-223	RESISTOR	22kΩ,1/6W
	R64	QRD161J-152	RESISTOR	1.5kΩ,1/6W
	R66	QRD161J-152	RESISTOR	1.5kΩ,1/6W
	R67	QRD161J-393	RESISTOR	39kΩ,1/6W
	R68	QRD161J-152	RESISTOR	1.5kΩ,1/6W
	R69	QRD161J-271	RESISTOR	270Ω,1/6W
	R70	QRD161J-103	RESISTOR	10kΩ,1/6W
	R71	QRD161J-472	RESISTOR	4.7kΩ,1/6W
	R72	QRD161J-473	RESISTOR	47kΩ,1/6W
	R73	QRD161J-104	RESISTOR	100kΩ,1/6W
	R74	QRD161J-222	RESISTOR	2.2kΩ,1/6W
	R77	QRD161J-122	RESISTOR	1.2kΩ,1/6W
	R78	QRD161J-123	RESISTOR	12kΩ,1/6W
	R79	QRD161J-123	RESISTOR	12kΩ,1/6W
	R80	QRD161J-102	RESISTOR	1kΩ,1/6W
	R81	QRD161J-333	RESISTOR	33kΩ,1/6W
	R82	QRD161J-273	RESISTOR	27kΩ,1/6W
	R83	QRD161J-152	RESISTOR	1.5kΩ,1/6W
	R84	QRD161J-102	RESISTOR	1kΩ,1/6W
	R85	QRD161J-102	RESISTOR	1kΩ,1/6W
	R86	QRD161J-271	RESISTOR	270Ω,1/6W
	R87	QRD161J-222	RESISTOR	2.2kΩ,1/6W
	R88	QRD161J-103	RESISTOR	10kΩ,1/6W
	R89	QRD161J-222	RESISTOR	2.2kΩ,1/6W
	R90	QRD161J-271	RESISTOR	270Ω,1/6W
	R91	QRD161J-222	RESISTOR	2.2kΩ,1/6W
	R92	QRD161J-102	RESISTOR	1kΩ,1/6W
	R93	QRD161J-821	RESISTOR	820Ω,1/6W
	R94	QRD161J-331	RESISTOR	330Ω,1/6W
	R95	QRD161J-681	RESISTOR	680Ω,1/6W
	R97	QRD161J-182	RESISTOR	1.8kΩ,1/6W
	R98	QRD161J-102	RESISTOR	1kΩ,1/6W
	R99	QRD161J-473	RESISTOR	47kΩ,1/6W
	R100	QRD161J-681	RESISTOR	680Ω,1/6W
	R103	QRD161J-104	RESISTOR	100kΩ,1/6W
	R104	QRD161J-104	RESISTOR	100kΩ,1/6W
	R105	QRD161J-473	RESISTOR	47kΩ,1/6W

#⚠	REF No.	PART No.	PART NAME,	DESCRIPTION
	R106	QRD161J-183	RESISTOR	18kΩ,1/6W
	R107	QRD161J-103	RESISTOR	10kΩ,1/6W
	R108	QRD161J-472	RESISTOR	4.7kΩ,1/6W
	R109	QRD161J-472	RESISTOR	4.7kΩ,1/6W
	R110	QRD161J-471	RESISTOR	470Ω,1/6W
	R111	QRD161J-471	RESISTOR	470Ω,1/6W
	R112	QRD161J-471	RESISTOR	470Ω,1/6W
	R113	QRD161J-471	RESISTOR	470Ω,1/6W
	R114	QRD161J-471	RESISTOR	470Ω,1/6W
	R115	QRD161J-471	RESISTOR	470Ω,1/6W
	R116	QRD161J-471	RESISTOR	470Ω,1/6W
	R117	QRD161J-471	RESISTOR	470Ω,1/6W
	R118	QRD161J-121	RESISTOR	120Ω,1/6W
	R119	QRD161J-121	RESISTOR	120Ω,1/6W
	R120	QRD161J-121	RESISTOR	120Ω,1/6W
	R121	QRD161J-121	RESISTOR	120Ω,1/6W
	R122	QRD161J-121	RESISTOR	120Ω,1/6W
	R123	QRD161J-121	RESISTOR	120Ω,1/6W
	R124	QRD161J-121	RESISTOR	120Ω,1/6W
	R125	QRD161J-121	RESISTOR	120Ω,1/6W
	R126	QRD161J-181	RESISTOR	180Ω,1/6W
	R127	QRD161J-473	RESISTOR	47kΩ,1/6W
	R135	QRD161J-103	RESISTOR	10kΩ,1/6W
	R136	QRD161J-181	RESISTOR	180Ω,1/6W
	R138	QRD161J-103	RESISTOR	10kΩ,1/6W
	R139	QRD161J-181	RESISTOR	180Ω,1/6W
⚠	R140	PU52108-2R2	POSITIVE THERMISTOR	
	R141	QRD161J-103	RESISTOR	10kΩ,1/6W
	R142	QRD161J-103	RESISTOR	10kΩ,1/6W
	R143	QRD161J-154	RESISTOR	150kΩ,1/6W
	R144	QRD161J-104	RESISTOR	100kΩ,1/6W
	R1001	QVZ3513-102	V RESISTOR	1kΩ
	RA1	EXB-P88103M	NETWORK RESISTOR	
	C2	QETC1CM-107	E CAPACITOR	100μF,16V
	C3	QETC1CM-106	E CAPACITOR	10μF,16V
	C4	QETC1AM-107	E CAPACITOR	100μF,10V
	C6	QCC31CK-104	CAPACITOR	0.1μF,16V
	C7	QETC1AM-107	E CAPACITOR	100μF,10V
	C8	QETC1AM-107	E CAPACITOR	100μF,10V
	C9	QCC31CK-104	CAPACITOR	0.1μF,16V
	C11	QCS31HJ-220	CAPACITOR	22pF,50V
	C13	QCS31HJ-560	CAPACITOR	56pF,50V
	C14	QCS31HJ-150	CAPACITOR	15pF,50V
	C15	QETC1AM-107	E CAPACITOR	100μF,10V
	C16	QCF31HP-103	CAPACITOR	0.01μF,50V
	C17	QFN31HJ-222	M CAPACITOR	0.0022μF,50V
	C18	QETC1HM-105	E CAPACITOR	1μF,50V
	C20	QCS31HJ-220	CAPACITOR	22pF,50V
	C21	QFN31HJ-103	M CAPACITOR	0.01μF,50V
	C22	QFN31HJ-152	M CAPACITOR	0.0015μF,50V
	C23	QETC1EM-475	E CAPACITOR	4.7μF,25V
	C24	QCS31HJ-390	CAPACITOR	39pF,50V
	C25	QCS31HJ-121	CAPACITOR	120pF,50V
	C26	QETC1CM-106	E CAPACITOR	10μF,16V
	C27	QETC1HM-474	E CAPACITOR	0.47μF,50V
	C28	QETC1AM-108	E CAPACITOR	1000μF,10V
	C29	QETC1AM-108	E CAPACITOR	1000μF,10V
	C30	QETC1AM-107	E CAPACITOR	100μF,10V
	C31	QETC1AM-107	E CAPACITOR	100μF,10V
	C32	QETC1AM-107	E CAPACITOR	100μF,10V
	C33	QCC31CK-104	CAPACITOR	0.1μF,16V
	C35	QFN31HJ-222	M CAPACITOR	0.0022μF,50V

<41><42>

#⚠	REF No.	PART No.	PART NAME, DESCRIPTION	
	C36	QCC31CK-104	CAPACITOR	0.1μF,16V
	C37	QCS31HJ-220	CAPACITOR	22pF,50V
	C38	QFN31HJ-103	M CAPACITOR	0.01μF,50V
	C39	QFN31HJ-152	M CAPACITOR	0.0015μF,50V
	C40	QETC1HM-475	E CAPACITOR	4.7μF,50V
	C43	QCC31CK-104	CAPACITOR	0.1μF,16V
	C46	QETC1CM-107	E CAPACITOR	100μF,16V
	C47	QETC1AM-107	E CAPACITOR	100μF,10V
	C48	QCS31HJ-101	CAPACITOR	100pF,50V
	C49	QCS31HJ-101	CAPACITOR	100pF,50V
	C50	QETC1AM-107	E CAPACITOR	100μF,10V
	C51	QETC1AM-476	E CAPACITOR	47μF,10V
	C52	QETC1HM-474	E CAPACITOR	0.47μF,50V
	C53	QETC1HM-474	E CAPACITOR	0.47μF,50V
	C54	QETC1AM-107	E CAPACITOR	100μF,10V
	C56	QCS31HJ-100	CAPACITOR	10pF,50V
	C58	QETC1HM-104	E CAPACITOR	0.1μF,50V
	C59	QETC1CM-476	E CAPACITOR	47μF,16V
	C60	QCC31EK-104	CAPACITOR	0.1μF,25V
	C61	QCC31CK-104	CAPACITOR	0.1μF,16V
	C62	QETC1CM-107	E CAPACITOR	100μF,16V
	C63	QETC1AM-476	E CAPACITOR	47μF,10V
	C64	QCC31CK-104	CAPACITOR	0.1μF,16V
	C65	QCC31CK-104	CAPACITOR	0.1μF,16V
	C66	QETC1AM-107	E CAPACITOR	100μF,10V
	C67	QETC1AM-107	E CAPACITOR	100μF,10V
	C68	QCC31CK-104	CAPACITOR	0.1μF,16V
	C69	QCC31CK-104	CAPACITOR	0.1μF,16V
	C70	QETC1AM-476	E CAPACITOR	47μF,10V
	C72	QETC1HM-105	E CAPACITOR	1μF,50V
	C73	QCC31CK-104	CAPACITOR	0.1μF,16V
	C74	QCC31CK-104	CAPACITOR	0.1μF,16V
	C75	QCC31CK-104	CAPACITOR	0.1μF,16V
	C76	QCC31CK-104	CAPACITOR	0.1μF,16V
	C80	QETC1HM-225	E CAPACITOR	2.2μF,50V
	C83	QCC31CK-104	CAPACITOR	0.1μF,16V
	C84	QETC1AM-107	E CAPACITOR	100μF,10V
	C86	QFN31HJ-103	M CAPACITOR	0.01μF,50V
	C89	QCS31HJ-220	CAPACITOR	22pF,50V
	C99	QCC31CK-104	CAPACITOR	0.1μF,16V
	C100	QCS31HJ-180	CAPACITOR	18pF,50V
	C101	PU57672-200	TRIMMER CAPACITOR	20pF
	C102	PU57672-300	TRIMMER CAPACITOR	30pF
	C105	QCF31HP-103	CAPACITOR	0.01μF,50V
	C107	QCS31HJ-271	CAPACITOR	270pF,50V
	C108	QCS31HJ-820	CAPACITOR	82pF,50V
	C109	QETC1CM-107	E CAPACITOR	100μF,16V
	L1	PU48530-220J	COIL	22μH
	L2	PU48530-471J	COIL	470μH
	L3	PU48530-221J	COIL	220μH
	L6	PU48530-680J	COIL	68μH
⚠	X1	PGZ01700	CRYSTAL RESONATOR	
⚠	X2	PGZ00937	CERAMIC FILTER	
⚠	X3	PGZ00937	CERAMIC FILTER	
⚠	X5	PU60784	RESONATOR	
⚠	K1	PGZ00354	FERRATE BEADS, ×3	
	EJ1	PGZ00582	EJECTOR, ×2	

#⚠	REF No.	PART No.	PART NAME, DESCRIPTION
	RV1	PU53276	PLASTIC RIVET, ×4
	SKT1	PGZ01428-064	IC SOCKET
	SLD1	PRD30781-02-03	SHIELD PLATE
	TP1	PU54983	TEST PIN, ×20
	CN1	PGZ00421-64	MALE CONNECTOR

OPERATION-CPU BOARD ASSEMBLY<42>

#⚠	REF No.	PART No.	PART NAME, DESCRIPTION	
	PWBA	PRK10117D1	OPE.CPU BOARD ASSY, S822E	
	PWBA	PRK10117E1	OPE.CPU BOARD ASSY, S622E	
	FJ2	QMV5001-018	SIP HEADER	
	IC1	UPD78P214CW-008	IC	
	IC2	M6M80011AP	IC	
	IC3	M50255P	IC	
	IC4	M50255P	IC	
	IC6	M5278D05	IC	
	D1	1SS133	DIODE	
	D2	1SS133	DIODE	
	D3	1SS133	DIODE, S822E	
	D5	1SS133	DIODE	
	R1	QRD161J-121	RESISTOR	120Ω ,1／6W
	R2	QRD161J-121	RESISTOR	120Ω ,1／6W
	R3	QRD161J-121	RESISTOR	120Ω ,1／6W
	R4	QRD161J-121	RESISTOR	120Ω ,1／6W
	R5	QRD161J-121	RESISTOR	120Ω ,1／6W
	R6	QRD161J-121	RESISTOR	120Ω ,1／6W
	R7	QRD161J-121	RESISTOR	120Ω ,1／6W
	R8	QRD161J-121	RESISTOR	120Ω ,1／6W
	R9	QRD161J-121	RESISTOR	120Ω ,1／6W
	R10	QRD161J-121	RESISTOR	120Ω ,1／6W
	R11	QRD161J-121	RESISTOR	120Ω ,1／6W
	R12	QRD161J-121	RESISTOR	120Ω ,1／6W
	R13	QRD161J-102	RESISTOR	1kΩ ,1／6W
	R14	QRD161J-102	RESISTOR	1kΩ ,1／6W
	R15	QRD161J-102	RESISTOR	1kΩ ,1／6W
	R16	QRD161J-102	RESISTOR	1kΩ ,1／6W
	R17	QRD161J-102	RESISTOR	1kΩ ,1／6W
	R18	QRD161J-121	RESISTOR	120Ω ,1／6W
	R22	QRD161J-105	RESISTOR	1MΩ ,1／6W
	R23	QRD161J-121	RESISTOR	120Ω ,1／6W
	R24	QRD161J-121	RESISTOR	120Ω ,1／6W
	R25	QRD161J-121	RESISTOR	120Ω ,1／6W
	R26	QRD161J-121	RESISTOR	120Ω ,1／6W
	R27	QRD161J-121	RESISTOR	120Ω ,1／6W
	R28	QRD161J-121	RESISTOR	120Ω ,1／6W
	R29	QRD161J-121	RESISTOR	120Ω ,1／6W
	R30	QRD161J-121	RESISTOR	120Ω ,1／6W
	R31	QRD161J-121	RESISTOR	120Ω ,1／6W
	R32	QRD161J-121	RESISTOR	120Ω ,1／6W
	R33	QRD161J-121	RESISTOR	120Ω ,1／6W

#△	REF No.	PART No.	PART NAME, DESCRIPTION	
	R34	QRD161J-121	RESISTOR	120Ω,1/6W
	R35	QRD161J-121	RESISTOR	120Ω,1/6W
	R36	QRD161J-121	RESISTOR	120Ω,1/6W
	R37	QRD161J-121	RESISTOR	120Ω,1/6W
	R38	QRD161J-121	RESISTOR	120Ω,1/6W
	R39	QRD161J-121	RESISTOR	120Ω,1/6W
	R40	QRD161J-121	RESISTOR	120Ω,1/6W
	R41	QRD161J-121	RESISTOR	120Ω,1/6W
	R42	QRD161J-121	RESISTOR	120Ω,1/6W
	R43	QRD161J-102	RESISTOR, S822E	1kΩ,1/6W
	R44	QRD161J-102	RESISTOR, S822E	1kΩ,1/6W
	R45	QRD161J-102	RESISTOR, S822E	1kΩ,1/6W
	R46	QRD161J-102	RESISTOR, S822E	1kΩ,1/6W
	R47	QRD161J-102	RESISTOR, S822E	1kΩ,1/6W
	R48	QRD161J-102	RESISTOR, S822E	1kΩ,1/6W
	R49	QRD161J-102	RESISTOR, S822E	1kΩ,1/6W
	R50	QRD161J-102	RESISTOR	1kΩ,1/6W
	R51	QRD161J-102	RESISTOR	1kΩ,1/6W
	R52	QRD161J-102	RESISTOR	1kΩ,1/6W
	R55	QRD161J-102	RESISTOR	1kΩ,1/6W
	R56	QRD161J-102	RESISTOR	1kΩ,1/6W
	R57	QRD161J-102	RESISTOR	1kΩ,1/6W
	R58	QRD161J-102	RESISTOR	1kΩ,1/6W
	R59	QRD161J-102	RESISTOR	1kΩ,1/6W
	R60	QRD161J-102	RESISTOR	1kΩ,1/6W
	R61	QRD161J-102	RESISTOR	1kΩ,1/6W
	R62	QRD161J-102	RESISTOR	1kΩ,1/6W
	R63	QRD161J-102	RESISTOR	1kΩ,1/6W
	R64	QRD161J-102	RESISTOR	1kΩ,1/6W
	R65	QRD161J-102	RESISTOR	1kΩ,1/6W
	R66	QRD161J-102	RESISTOR	1kΩ,1/6W
	R68	QRD161J-121	RESISTOR	120Ω,1/6W
	R69	QRD161J-121	RESISTOR	120Ω,1/6W
	R70	QRD161J-333	RESISTOR	33kΩ,1/6W
	R71	QRD161J-333	RESISTOR	33kΩ,1/6W
	R72	QRD161J-333	RESISTOR	33kΩ,1/6W
	R73	QRD161J-333	RESISTOR	33kΩ,1/6W
	R74	QRD161J-333	RESISTOR	33kΩ,1/6W
	R75	QRD161J-333	RESISTOR	33kΩ,1/6W
	RA1	EXB-P85333M	RESISTOR ARRAY	
	RA2	EXB-P86333M	RESISTOR ARRAY	
	C1	QCFB1EZ-223	CAPACITOR	0.022μF,25V
	C2	QCSB1HJ-200	CAPACITOR	20pF,50V
	C3	QCSB1HJ-200	CAPACITOR	20pF,50V
	C4	QCFB1EZ-223	CAPACITOR	0.022μF,25V
	C5	QCFB1EZ-223	CAPACITOR	0.022μF,25V
	C6	QCFB1EZ-223	CAPACITOR	0.022μF,25V
	C8	QER61CM-476	E CAPACITOR	47μF,16V
	C9	QCFB1EZ-223	CAPACITOR	0.022μF,25V
	C10	QER61CM-476	E CAPACITOR	47μF,16V
	C11	QCFB1EZ-223	CAPACITOR	0.022μF,25V
	C12	QCFB1EZ-223	CAPACITOR	0.022μF,25V
	C13	QER61CM-476	E CAPACITOR	47μF,16V
	C14	QCS11HJ-101	CAPACITOR	100pF,50V
	L1	PGZ00617-221	COIL	
△	CF1	PGZ00513	CERAMIC FILTER	
	SKT1	PGZ01428-064	IC SOCKET	

#△	REF No.	PART No.	PART NAME, DESCRIPTION
	CN1	PU58844-104	CONNECTOR
	CN2	PU58844-109	CONNECTOR
	CN3	PU58844-105	CONNECTOR
	CN4	PU58844-108	CONNECTOR
	CN5	PU58844-113	CONNECTOR
	CN6	PU58844-108	CONNECTOR
	CN7	PU58844-4Y	CONNECTOR
	CN8	PU58844-5R	CONNECTOR
	CN9	PU58844-4R	CONNECTOR
	CN10	PU58844-5	CONNECTOR
	CN11	PU58844-4	CONNECTOR

OPERATION-KEY 1 BOARD ASSEMBLY<43>

PWBA	PRK10117A2	OPE.KEY-1 BORAD ASSY, BR-S822E	
PWBA	PRK10117B2	OPE.KEY1 BOARD ASSY, BR-S622E	
FJ2	QMV5001-018	SIP HEADER	
IC1	M50255P	IC	
IC2	TC74HC4028AP	IC	
IC3	BA618	IC	
IC4	TD62583AP	IC	
Q1	DTA124EF	TRANSISTOR	
D1	GL-8PR21	LE DIODE, S822E	
D2	GL-8PR21	LE DIODE, S822E	
D3	GL-8PR21	LE DIODE, S822E	
D4	GL-8PR21	LE DIODE, S822E	
D5	GL-8PR21	LE DIODE	
D6	GL-8PR21	LE DIODE	
D7	GL-8PR21	LE DIODE	
D8	GL-8PR21	LE DIODE	
D9	GL-8PR21	LE DIODE	
D10	GL-8PR21	LE DIODE	
D11	GL-8PR21	LE DIODE	
D12	GL-8PR21	LE DIODE	
D13	GL-8PR21	LE DIODE, S822E	
D14	GL-8PR21	LE DIODE, S822E	
D15	1SS133	DIODE, S822E	
D16	1SS133	DIODE, S822E	
D17	1SS133	DIODE, S822E	
D18	1SS133	DIODE	
D19	1SS133	DIODE	
D20	1SS133	DIODE	
D21	1SS133	DIODE	
D22	1SS133	DIODE, S822E	
D23	1SS133	DIODE, S822E	
D24	1SS133	DIODE, S822E	
D25	1SS133	DIODE, S822E	
D26	1SS133	DIODE	
D27	1SS133	DIODE	
D28	1SS133	DIODE	
D29	1SS133	DIODE	
D30	1SS133	DIODE, S822E	
D31	1SS133	DIODE	
R1	QRD161J-102	RESISTOR, S822E	1kΩ,1/6W
R2	QRD161J-102	RESISTOR, S822E	1kΩ,1/6W
R3	QRD161J-102	RESISTOR, S822E	1kΩ,1/6W
R4	QRD161J-102	RESISTOR, S822E	1kΩ,1/6W

#⚠REF No.	PART No.	PART NAME, DESCRIPTION	
R5	QRD161J-102	RESISTOR	1kΩ,1/6W
R6	QRD161J-102	RESISTOR	1kΩ,1/6W
R7	QRD161J-102	RESISTOR	1kΩ,1/6W
R8	QRD161J-102	RESISTOR	1kΩ,1/6W
R9	QRD161J-102	RESISTOR	1kΩ,1/6W
R10	QRD161J-102	RESISTOR	1kΩ,1/6W
R11	QRD161J-102	RESISTOR	1kΩ,1/6W
R12	QRD161J-102	RESISTOR	1kΩ,1/6W
R13	QRD161J-102	RESISTOR, S822E	1kΩ,1/6W
R14	QRD161J-102	RESISTOR, S822E	1kΩ,1/6W
R15	QRD161J-121	RESISTOR	120Ω,1/6W
R16	QRD161J-121	RESISTOR	120Ω,1/6W
R17	QRD161J-333	RESISTOR	33kΩ,1/6W
R18	QRD161J-333	RESISTOR	33kΩ,1/6W
R20	QRD161J-121	RESISTOR	120Ω,1/6W
R21	QRD161J-121	RESISTOR	120Ω,1/6W
R22	QRD161J-121	RESISTOR	120Ω,1/6W
R23	QRD161J-121	RESISTOR	120Ω,1/6W
R24	QRD161J-121	RESISTOR	120Ω,1/6W
R25	QRD161J-121	RESISTOR	120Ω,1/6W
R26	QRD161J-121	RESISTOR	120Ω,1/6W
R27	QRD161J-121	RESISTOR	120Ω,1/6W
R28	QRD161J-101	RESISTOR	100Ω,1/6W
R29	QRD161J-101	RESISTOR	100Ω,1/6W
R30	QRD161J-101	RESISTOR	100Ω,1/6W
R31	QRD161J-101	RESISTOR	100Ω,1/6W
R32	QRD161J-101	RESISTOR	100Ω,1/6W
R33	QRD161J-101	RESISTOR	100Ω,1/6W
R34	QRD161J-101	RESISTOR	100Ω,1/6W
R35	QRD161J-101	RESISTOR	100Ω,1/6W
C1	QCFB1EZ-223	CAPACITOR	0.022μF,25V
C2	QCFB1EZ-223	CAPACITOR	0.022μF,25V
C3	QCFB1EZ-223	CAPACITOR	0.022μF,25V
SW1	PU57551	TACT SWITCH, S822E	
SW2	PU57551	TACT SWITCH, S822E	
SW3	PU57551	TACT SWITCH, S822E	
SW4	PU57551	TACT SWITCH	
SW5	PU57551	TACT SWITCH	
SW6	PU57551	TACT SWITCH	
SW7	PU57551	TACT SWITCH	
SW8	PU57551	TACT SWITCH, S822E	
SW9	PU57551	TACT SWITCH, S822E	
SW10	PU57551	TACT SWITCH, S822E	
SW11	PU57551	TACT SWITCH, S822E	
SW12	PU57551	TACT SWITCH	
SW13	PU57551	TACT SWITCH	
SW14	PU57551	TACT SWITCH	
SW15	PU57551	TACT SWITCH	
SW16	PU57551	TACT SWITCH, S822E	
HD1	PRD43073	LED HOLDER,	×8(S622) ×14(S822)
HD2	PQ40795-2-2	LED HOLDER	

OPERATION-KEY 2 BOARD ASSEMBLY<44>

#⚠REF No.	PART No.	PART NAME, DESCRIPTION	
PWBA	PRK10117A3	OPE.KEY-2 BOARD ASSY, S822E	
PWBA	PRK10117B3	OPE.KEY2 BOARD ASSY, S622E	
Q1	DTA124ES	TRANSISTOR	
Q2	DTA124ES	TRANSISTOR	
Q3	DTA124ES	TRANSISTOR	
Q4	DTA124ES	TRANSISTOR	
Q5	DTA124ES	TRANSISTOR	
D1	GL-8PR21	LE DIODE, S822E	
D2	GL-8EG21	LE DIODE, S822E	
D3	GL-8EG21	LE DIODE, S822E	
D4	GL-8EG21	LE DIODE, S822E	
D5	GL-8PR21	LE DIODE, S822E	
D6	GL-8PR21	LE DIODE, S822E	
D7	GL-8PR21	LE DIODE, S822E	
D8	1SS133	DIODE, S822E	
D9	1SS133	DIODE, S822E	
D10	1SS133	DIODE, S822E	
D11	1SS133	DIODE, S822E	
D12	1SS133	DIODE, S822E	
D13	1SS133	DIODE, S822E	
D14	1SS133	DIODE, S822E	
D15	1SS133	DIODE, S822E	
D16	1SS133	DIODE	
D17	1SS133	DIODE	
D18	1SS133	DIODE	
D19	1SS133	DIODE	
D20	1SS133	DIODE	
D21	1SS133	DIODE	
D22	1SS133	DIODE	
D23	1SS133	DIODE	
D24	1SS133	DIODE	
D25	1SS133	DIODE	
R1	QRD161J-121	RESISTOR	120Ω,1/6W
R2	QRD161J-121	RESISTOR	120Ω,1/6W
R3	QRD161J-121	RESISTOR	120Ω,1/6W
R4	QRD161J-121	RESISTOR	120Ω,1/6W
R5	QRD161J-121	RESISTOR	120Ω,1/6W
SW1	PU57551	TACT SWITCH, S822E	
SW2	PU57551	TACT SWITCH, S822E	
SW3	PU57551	TACT SWITCH, S822E	
SW4	PU57551	TACT SWITCH, S822E	
SW5	PU57551	TACT SWITCH, S822E	
SW6	PU57551	TACT SWITCH, S822E	
SW7	PU57551	TACT SWITCH, S822E	
SW8	PU57551	TACT SWITCH, S822E	
SW9	PU57551	TACT SWITCH	
SW10	PU57551	TACT SWITCH	
SW11	PU57551	TACT SWITCH	
SW12	PU57551	TACT SWITCH	
SW13	PGZ00470-02	SLIDE SWITCH	
SW14	PGZ00470-02	SLIDE SWITCH	
SW15	PGZ00470-02	SLIDE SWITCH	
SW16	PGZ00469-02	SLIDE SWITCH	
SW17	PGZ00470-02	SLIDE SWITCH	
HD1	PRD43073	LED HOLDER,	×7 (S822E)
HD2	PQ40795-2-2	LED HOLDER,	×7 (S822E)
CN1	PU58844-13	CONNECTOR	
CN2	PU58844-8	CONNECTOR	
CN3	PU58844-5	CONNECTOR	
CN4	PU58844-2	CONNECTOR	

COUNTER DISPLAY BOARD ASSEMBLY<45>

#⚠REF No.	PART No.	PART NAME, DESCRIPTION
PWBA	PRK30074A	COUNTER DISPLAY BOARD ASSY
D1	GL8T040	LE DIODE
D2	GL8T040	LE DIODE
D3	GL8T040	LE DIODE
D4	GL8T040	LE DIODE
D5	GL8T040	LE DIODE
D6	GL8T040	LE DIODE
D7	GL8T040	LE DIODE
D8	GL8T040	LE DIODE
SW1	PU57550	TACT SWITCH
SKT1	PGZ01597-18	IC SOCKET
SPC1	PRD30030-65	PAD, ×2

MAIN LED BOARD ASSEMBLY<46>

#⚠REF No.	PART No.	PART NAME, DESCRIPTION	
PWBA	PRK20143A1-01	MAIN LED BOARD ASSY	
D1	GL-8EG21	LE DIODE	
D2	GL-8EG21	LE DIODE	
D3	AABG4307K	LE DIODE	
D4	GL-8EG21	LE DIODE	
D5	GL-8EG21	LE DIODE	
D6	GL-8EG21	LE DIODE	
D7	GL-8HY21	LE DIODE	
D8	GL-8EG21	LE DIODE	
D9	GL-8EG21	LE DIODE	
D10	GL-8EG21	LE DIODE	
D11	GL-8EG21	LE DIODE	
D12	GL-8PR21	LE DIODE	
D13	GL-8EG21	LE DIODE	
D14	GL-8EG21	LE DIODE	
D15	GL-8EG21	LE DIODE	
R1	QRD161J-152	RESISTOR	1.5kΩ,1/6W
R2	QRD161J-152	RESISTOR	1.5kΩ,1/6W
CN1	PU58844-5R	CONNECTOR	
CN2	PU58844-4R	CONNECTOR	
CN3	PU58844-5	CONNECTOR	
CN4	PU58844-4	CONNECTOR	

DIRECTION LED BOARD ASSEMBLY<47>

#⚠REF No.	PART No.	PART NAME, DESCRIPTION
PWBA	PRK10117A5	DIRECTION BOARD ASSY, S622E
D1	GL-8PR21	LE DIODE
D2	GL-8PR21	LE DIODE
D3	SLB-55MG3F	LE DIODE
D4	SLB-55VR3F	LE DIODE
D5	SLB-55MG3F	LE DIODE
SW1	PU57551	TACT SWITCH
HD1	PU50633-4	LED HOLDER, ×2
HD2	PU50633-3	LED SPACER, ×3
HD3	PQ40795-2-2	LED HOLDER, ×3
CN6	PU58844-8	CONNECTOR

EJECT SW BOARD ASSEMBLY<48>

#⚠REF No.	PART No.	PART NAME, DESCRIPTION
PWBA	PRK20143A2	EJECT SW BOARD ASSY
D1	GL-8PR21	LE DIODE
SW1	PU57551	TACT SWITCH
CN1	PU58844-4Y	CONNECTOR

REAR 1 BOARD ASSEMBLY<71>

#⚠REF No.	PART No.	PART NAME, DESCRIPTION
PWBA	PRK10096A1	REAR 1 BOARD ASSY
Q1	2SC1740S(RS)	TRANSISTOR
D1	RD10ES-T1B1	ZENER DIODE
D2	RD10ES-T1B1	ZENER DIODE
D3	RD10ES-T1B1	ZENER DIODE
D4	RD10ES-T1B1	ZENER DIODE
D5	RD10ES-T1B1	ZENER DIODE
D6	RD10ES-T1B1	ZENER DIODE
D7	RD10ES-T1B1	ZENER DIODE
D8	RD10ES-T1B1	ZENER DIODE
D9	RD10ES-T1B1	ZENER DIODE
D10	RD10ES-T1B1	ZENER DIODE
D11	RD10ES-T1B1	ZENER DIODE
D12	RD10ES-T1B1	ZENER DIODE
D13	RD10ES-T1B1	ZENER DIODE
D14	RD10ES-T1B1	ZENER DIODE
D15	RD10ES-T1B1	ZENER DIODE
D16	RD10ES-T1B1	ZENER DIODE
D17	RD10ES-T1B1	ZENER DIODE
D18	RD10ES-T1B1	ZENER DIODE
D19	RD10ES-T1B1	ZENER DIODE
D20	RD10ES-T1B1	ZENER DIODE
D21	RD10ES-T1B1	ZENER DIODE
D22	RD10ES-T1B1	ZENER DIODE
D23	RD10ES-T1B1	ZENER DIODE
D24	RD10ES-T1B1	ZENER DIODE
D25	RD10ES-T1B1	ZENER DIODE
D26	RD10ES-T1B1	ZENER DIODE
D27	RD10ES-T1B1	ZENER DIODE
D28	RD10ES-T1B1	ZENER DIODE
D29	RD10ES-T1B1	ZENER DIODE
D30	RD10ES-T1B1	ZENER DIODE

#⚠	REF No.	PART No.	PART NAME, DESCRIPTION	
	D31	RD9.1EW	ZENER DIODE	
	D32	RD9.1EW	ZENER DIODE	
	D33	RD9.1EW	ZENER DIODE	
	D34	RD9.1EW	ZENER DIODE	
	D35	RD9.1EW	ZENER DIODE	
	R1	QRD161J-750	RESISTOR	75Ω,1/6W
	R2	QRD161J-750	RESISTOR	75Ω,1/6W
	R3	QRD161J-750	RESISTOR	75Ω,1/6W
	R4	QRD161J-750	RESISTOR	75Ω,1/6W
	R5	QRD161J-750	RESISTOR	75Ω,1/6W
	R6	QRD161J-750	RESISTOR	75Ω,1/6W
	R7	QRD161J-750	RESISTOR	75Ω,1/6W
	R8	QRD161J-750	RESISTOR	75Ω,1/6W
	R9	QRD161J-104	RESISTOR	100kΩ,1/6W
	R10	QRD161J-224	RESISTOR	220kΩ,1/6W
	R11	QRD161J-750	RESISTOR	75Ω,1/6W
	C1	QER41CM-106	E CAPACITOR	10μF,16V
	C8	QFN31HJ-103	M CAPACITOR	0.01μF,50V
	SW1	QSS1F12-L01	SLIDE SWITCH	
	SW2	QSS1F12-L01	SLIDE SWITCH	
⚠	K1	PGZ00354	FERRATE BEADS	
⚠	K2	PGZ00354	FERRATE BEADS	
⚠	K3	PGZ00354	FERRATE BEADS	
⚠	K4	PGZ00354	FERRATE BEADS	
⚠	K5	PGZ00354	FERRATE BEADS	
	CN1	PU58844-107	CONNECTOR	
	CN2	PU58844-110	CONNECTOR	
	CN3	PU58844-103	CONNECTOR	
	CN4	PU58844-105	CONNECTOR	
	CN5	PU58844-102	CONNECTOR	

REAR 2 BOARD ASSEMBLY<72>

#⚠	REF No.	PART No.	PART NAME, DESCRIPTION	
	PWBA	PRK10096A2-01	REAR 2 BOARD ASSY	
	D1	RD10ES-T1B1	ZENER DIODE	
	D2	RD10ES-T1B1	ZENER DIODE	
	D3	RD10ES-T1B1	ZENER DIODE	
	D4	RD10ES-T1B1	ZENER DIODE	
	SW1	PGZ01210	SLIDE SWITCH	
⚠	K1	PGZ00354	FERRATE BEADS	
	VA1	PU49624-2	VARISTOR	
	VA2	PU49624-2	VARISTOR	
	VA3	PU49624-2	VARISTOR	
	VA4	PU49624-2	VARISTOR	
	VA5	PU49624-2	VARISTOR	
	VA6	PU49624-2	VARISTOR	
	VA7	PU49624-2	VARISTOR	
	CN1	PU58844-107	CONNECTOR	
	CN2	PU58844-104	CONNECTOR	

REAR 3 BOARD ASSEMBLY<73>

#⚠	REF No.	PART No.	PART NAME, DESCRIPTION	
	PWBA	PRK10096B3-01	REAR 3 BOARD ASSY	
	D1	RD27ES-T1B2	ZENER DIODE	
	D2	RD27ES-T1B2	ZENER DIODE	
	D3	RD27ES-T1B2	ZENER DIODE	
	D4	RD27ES-T1B2	ZENER DIODE	
	D5	RD27ES-T1B2	ZENER DIODE	
	D6	RD27ES-T1B2	ZENER DIODE	
	D7	RD27ES-T1B2	ZENER DIODE	
	D8	RD27ES-T1B2	ZENER DIODE	
	D9	RD27ES-T1B2	ZENER DIODE	
	D10	RD27ES-T1B2	ZENER DIODE	
	D11	RD27ES-T1B2	ZENER DIODE	
	D12	RD27ES-T1B2	ZENER DIODE	
	D13	RD27ES-T1B2	ZENER DIODE	
	D14	RD27ES-T1B2	ZENER DIODE	
	D15	RD27ES-T1B2	ZENER DIODE	
	D16	RD27ES-T1B2	ZENER DIODE	
	C1	QFN31HJ-102	M CAPACITOR	0.001μF,50V
	C2	QFN31HJ-102	M CAPACITOR	0.001μF,50V
	C3	QFN31HJ-102	M CAPACITOR	0.001μF,50V
	C4	QFN31HJ-102	M CAPACITOR	0.001μF,50V
	L1	PU48530-8R2J	COIL	8.2μH
	L2	PU48530-8R2J	COIL	8.2μH
	L3	PU48530-8R2J	COIL	8.2μH
	L4	PU48530-8R2J	COIL	8.2μH
	L5	PU48530-8R2J	COIL	8.2μH
	L6	PU48530-8R2J	COIL	8.2μH
	L7	PU48530-8R2J	COIL	8.2μH
	L8	PU48530-8R2J	COIL	8.2μH
	VA1	PU49624-2	VARISTOR	
	VA2	PU49624-2	VARISTOR	
	VA3	PU49624-2	VARISTOR	
	VA4	PU49624-2	VARISTOR	
	VA13	PU49624-2	VARISTOR	
	VA14	PU49624-2	VARISTOR	
	VA15	PU49624-2	VARISTOR	
	VA16	PU49624-2	VARISTOR	
	CN5	PU58844-103	CONNECTOR	
	CN6	PU58844-103R	CONNECTOR	
	CN7	PU58844-103Y	CONNECTOR	
	CN8	PU58844-103	CONNECTOR	

METER BOARD ASSEMBLY<80>

#⚠	REF No.	PART No.	PART NAME, DESCRIPTION	
	PWBA	PRK20093A1	METER BOARD ASSY	

#⚠REF No.	PART No.	PART NAME,	DESCRIPTION
MET1	PGZ01336	METER	
MET2	PGZ01337	METER	
D1	SLV-56YC3F	LE DIODE	
D2	SLV-56YC3F	LE DIODE	
D3	SLV-56YC3F	LE DIODE	
D4	SLV-56YC3F	LE DIODE	
D5	SLV-56YC3F	LE DIODE	
D6	SLV-56YC3F	LE DIODE	
D7	SLV-56YC3F	LE DIODE	
D8	SLV-56YC3F	LE DIODE	
D9	SLV-56YC3F	LE DIODE	
D10	SLV-56YC3F	LE DIODE	
R1	QRD167J-561	RESISTOR	560Ω,1/6W
R2	QRD167J-681	RESISTOR	680Ω,1/6W
R3	QRD167J-561	RESISTOR	560Ω,1/6W
R4	QRD167J-681	RESISTOR	680Ω,1/6W
HD1	PRD30597	SHADE, ×2	
CN1	PU59513-2R	CONNECTOR	
CN2	PU59513-4	CONNECTOR	

METER SW BOARD ASSEMBLY<81>

PWBA	PRK20093A2	METER SW BOARD ASSY	
R1	QRD167J-101	RESISTOR	100Ω,1/6W
SW1	PGZ00469-02	SLIDE SWITCH	
SW2	PU57551	TACT SWITCH	
CN1	PU59513-3	CONNECTOR	
CN2	PU59513-2Y	CONNECTOR	
CN3	PU59513-2	CONNECTOR	

TRACKING VR BOARD ASSEMBLY<82>

PWBA	PRK20093A3	TRACKING VR BOARD ASSY	
R1	PGZ01582	V RESISTOR	
CN1	PU58844-3R	CONNECTOR	

SUB PANEL BOARD ASSEMBLY<83>

#⚠REF No.	PART No.	PART NAME,	DESCRIPTION
PWBA	PRK10097A1	SUB PANEL BOARD ASSY	
R1	QRD161J-272	RESISTOR	2.7kΩ,1/6W
R2	PGZ01580	V RESISTOR	
R3	QRD161J-272	RESISTOR	2.7kΩ,1/6W
R4	QRD161J-272	RESISTOR	2.7kΩ,1/6W
R5	PGZ01580	V RESISTOR	
R6	QRD161J-272	RESISTOR	2.7kΩ,1/6W
R7	QRD161J-272	RESISTOR	2.7kΩ,1/6W
R8	PGZ01580	V RESISTOR	
R9	QRD161J-272	RESISTOR	2.7kΩ,1/6W
R10	QRD161J-272	RESISTOR	2.7kΩ,1/6W
R11	PGZ01580	V RESISTOR	
R12	QRD161J-272	RESISTOR	2.7kΩ,1/6W
R13	QRD161J-682	RESISTOR	6.8kΩ,1/6W
R14	QVPB701-103	V RESISTOR	10kΩ
R15	QRD161J-473	RESISTOR	47kΩ,1/6W
R16	QVPB701-103	V RESISTOR	10kΩ
R17	QRD161J-222	RESISTOR	2.2kΩ,1/6W
R18	QVPB701-103	V RESISTOR	10kΩ
R19	QRD161J-153	RESISTOR	15kΩ,1/6W
R20	PGZ01581	V RESISTOR	
R21	QRD161J-681	RESISTOR	680Ω,1/6W
R22	QRD161J-471	RESISTOR	470Ω,1/6W
C1	QCF31HP-103	CAPACITOR	0.01μF,50V
SW1	PU58486-1-1	SLIDE SWITCH	
SW2	PU58486-1-1	SLIDE SWITCH	
SW3	PU58486-1-1	SLIDE SWITCH	
SW4	PU58486-1-1	SLIDE SWITCH	
SW5	PU58486-1-1	SLIDE SWITCH	
SW6	PU58486-1-1	SLIDE SWITCH	
SW7	PU58488-1-1	SLIDE SWITCH	
SW8	PU58486-1-1	SLIDE SWITCH	
SW9	PU58486-1-1	SLIDE SWITCH	
SW10	PU58486-1-1	SLIDE SWITCH	
SW11	PU58486-1-1	SLIDE SWITCH	
SW12	QSR0095-L04	SLIDE SWITCH	
SW13	QSR0095-L04	SLIDE SWITCH	
CN1	PU58844-10	CONNECTOR	
CN2	PU58844-2	CONNECTOR	
CN3	PU58844-8	CONNECTOR	
CN4	PU58844-2	CONNECTOR	
CN5	PU58844-5	CONNECTOR	
CN6	PU58844-3	CONNECTOR	
CN7	PU58844-2	CONNECTOR	
CN8	PU58844-2	CONNECTOR	
CN9	PU58844-4	CONNECTOR	

TP TERMINAL BOARD ASSEMBLY<84>

PWBA	PRK10097A2	TP TERMINAL BOARD ASSY	
D1	RD10ES-T1B1	ZENER DIODE	
D2	RD10ES-T1B1	ZENER DIODE	
D3	RD10ES-T1B1	ZENER DIODE	
D4	RD10ES-T1B1	ZENER DIODE	
D5	RD10ES-T1B1	ZENER DIODE	
D6	RD10ES-T1B1	ZENER DIODE	
TP1	PGZ00761	TERMINAL	
CN1	PU58844-106	CONNECTOR	

DECK TERNINAL BOARD ASSEMBLY<91>

#⚠REF No.	PART No.	PART NAME, DESCRIPTION	
PWBA	PRK20096A-05	D. TERM. BOARD ASSY	

- DECK TERMINAL 1 BOARD ASSY <91> -

#⚠REF No.	PART No.	PART NAME, DESCRIPTION	
Q1	2SA933S(QRS)	TRANSISTOR	
Q2	DTC144ES	TRANSISTOR	
D1	1SS133	DIODE	
D2	RD3.0ESB2	ZENER DIODE	
D3	1SS133	DIODE	
R1	QRD161J-103	RESISTOR	10kΩ,1/6W
R2	QRD161J-103	RESISTOR	10kΩ,1/6W
R3	QRD161J-103	RESISTOR	10kΩ,1/6W
RY1	PGZ01585-06	RELAY	
CL1	PGZ01377-03	STYLE PIN	
CN1	PU58844-11	CONNECTOR	
CN2	PU58844-12	CONNECTOR	
CN3	PU58844-2	CONNECTOR	
CN4	PU59555-2	CONNECTOR	
CN6	PU58844-2	CONNECTOR	
CN7	PU58844-3	CONNECTOR	
CN8	PU58844-2Y	CONNECTOR	
CN10	PU58844-8	CONNECTOR	
CN11	PU58844-108	CONNECTOR	

- DECK TERMINAL 2 BOARD ASSY <92> -

#⚠REF No.	PART No.	PART NAME, DESCRIPTION	
IC101	TL431CLP	IC	
IC102	NJM2068S-D	IC	
IC103	NJM2068S-D	IC	
IC104	NJM2068S-D	IC	
D101	11ES2	DIODE	
D102	11ES2	DIODE	
R101	QRV141F-2200AY	CMF RESISTOR	220Ω,1/4W
R102	QRV141F-3302AY	CMF RESISTOR	33.0kΩ,1/4W
R103	QRV141F-1002AY	CMF RESISTOR	10.0kΩ,1/4W
R104	QRV141F-3000AY	CMF RESISTOR	300Ω,1/4W
R105	QRV141F-2000AY	CMF RESISTOR	200Ω,1/4W
R106	QRV141F-3602AY	CMF RESISTOR	36.0kΩ,1/4W
R107	QRD161J-0R0	RESISTOR	0Ω,1/6W
R108	QRV141F-1002AY	CMF RESISTOR	10.0kΩ,1/4W
R109	QRV141F-1002AY	CMF RESISTOR	10.0kΩ,1/4W
R110	QRV141F-1501AY	CMF RESISTOR	1.50kΩ,1/4W
R111	QRV141F-1002AY	CMF RESISTOR	10.0kΩ,1/4W
R112	QRV141F-1002AY	CMF RESISTOR	10.0kΩ,1/4W
R113	QRV141F-1002AY	CMF RESISTOR	10.0kΩ,1/4W
R114	QRV141F-1002AY	CMF RESISTOR	10.0kΩ,1/4W
R115	QRD161J-103	RESISTOR	10kΩ,1/6W
R116	QRD161J-272	RESISTOR	2.7kΩ,1/6W
R117	QRD161J-103	RESISTOR	10kΩ,1/6W
R118	QRD161J-273	RESISTOR	27kΩ,1/6W
C101	QCZ0208-104	CAPACITOR	0.1μF
C102	QER41EM-106	E CAPACITOR	10μF,25V
C103	QER41EM-106	E CAPACITOR	10μF,25V
C104	QCZ0208-104	CAPACITOR	0.1μF
C105	QCZ0208-104	CAPACITOR	0.1μF
C106	QCZ0208-104	CAPACITOR	0.1μF
C107	QCZ0208-104	CAPACITOR	0.1μF
C108	QCZ0208-104	CAPACITOR	0.1μF
C109	QCZ0208-104	CAPACITOR	0.1μF
C110	QCZ0208-104	CAPACITOR	0.1μF
S1	PU61319	REC SAFETY SWITCH	
S2	PU61321	TAPE SENSOR	
S3	YU40177-2	PUSH SWITCH	
CN102	PU58844-9	CONNECTOR	
CN103	PU58844-3	CONNECTOR	
CN104	PU58844-3	CONNECTOR	

CASSETTE HOUSING BOARD ASSEMBLY<93>

#⚠REF No.	PART No.	PART NAME, DESCRIPTION
PWBA	PRK30068A-01	HOUSING BOARD ASSY
Q1	PN268VI	PHOTO TRANSISTOR
S1	PU60629	CASSETTE SENSOR
S2	YU40177-2	PUSH SWITCH
S3	YU40177-2	PUSH SWITCH
CN1	PU58844-108	CONNECTOR